Counts Unlimited Inc.
25286 Jaclyn Avenue
Moreno Valley, CA 92557
951-485-7934

City of Fontana
N/S: Cherry Avenue
E/W: Baseline Avenue
Weather: Sunny

File Name : FONCHBAAM
Site Code : 9111093
Start Date : 5/6/2009
Page No : 2

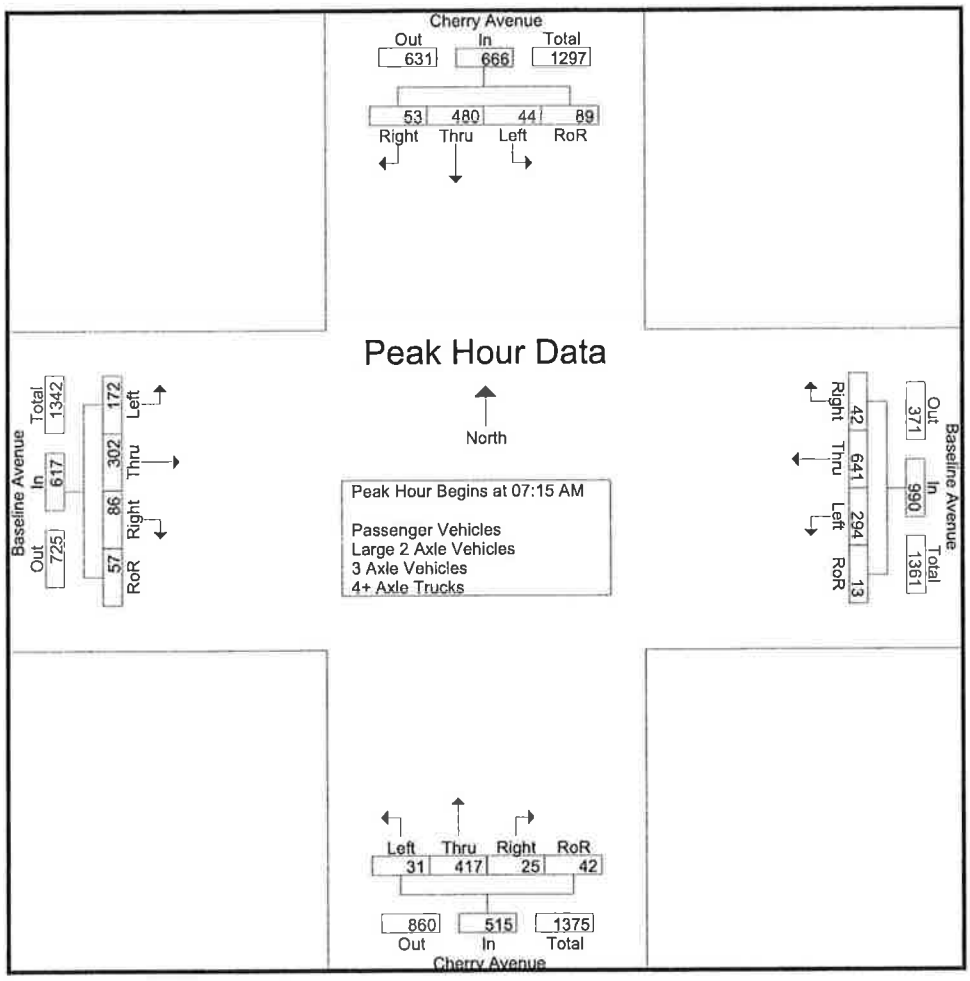

Peak Hour Analysis From 07:00 AM to 08:45 AM - Peak 1 of 1

Peak Hour for Each Approach Begins at:

	07:15 AM					07:30 AM					07:00 AM					07:30 AM				
+0 mins.	10	105	9	18	142	88	**213**	**15**	**7**	**323**	**13**	99	**11**	7	130	**48**	69	**27**	9	153
+15 mins.	11	111	**22**	19	163	**93**	166	15	1	275	5	**133**	6	13	**157**	47	84	23	**16**	**170**
+30 mins.	10	**142**	14	**35**	**201**	61	112	2	3	178	11	116	7	**14**	148	36	**95**	23	14	168
+45 mins.	**13**	122	**8**	**17**	160	65	155	4	5	229	10	86	6	5	107	**37**	**89**	**10**	**3**	**139**
Total Volume	44	480	53	89	666	307	646	36	16	1005	39	434	30	39	542	168	337	83	42	630
% App. Total	6.6	72.1	8	13.4		30.5	64.3	3.6	1.6		7.2	80.1	5.5	7.2		26.7	53.5	13.2	6.7	
PHF	.846	.845	.602	.636	.828	.825	.758	.600	.571	.778	.750	.816	.682	.696	.863	.875	.887	.769	.656	.926

Counts Unlimited Inc.
25286 Jaclyn Avenue
Moreno Valley, CA 92557
951-485-7934

City of Fontana
N/S: Cherry Avenue
E/W: Baseline Avenue
Weather: Sunny

File Name : FONCHBAAM
Site Code : 9111093
Start Date : 5/6/2009
Page No : 2

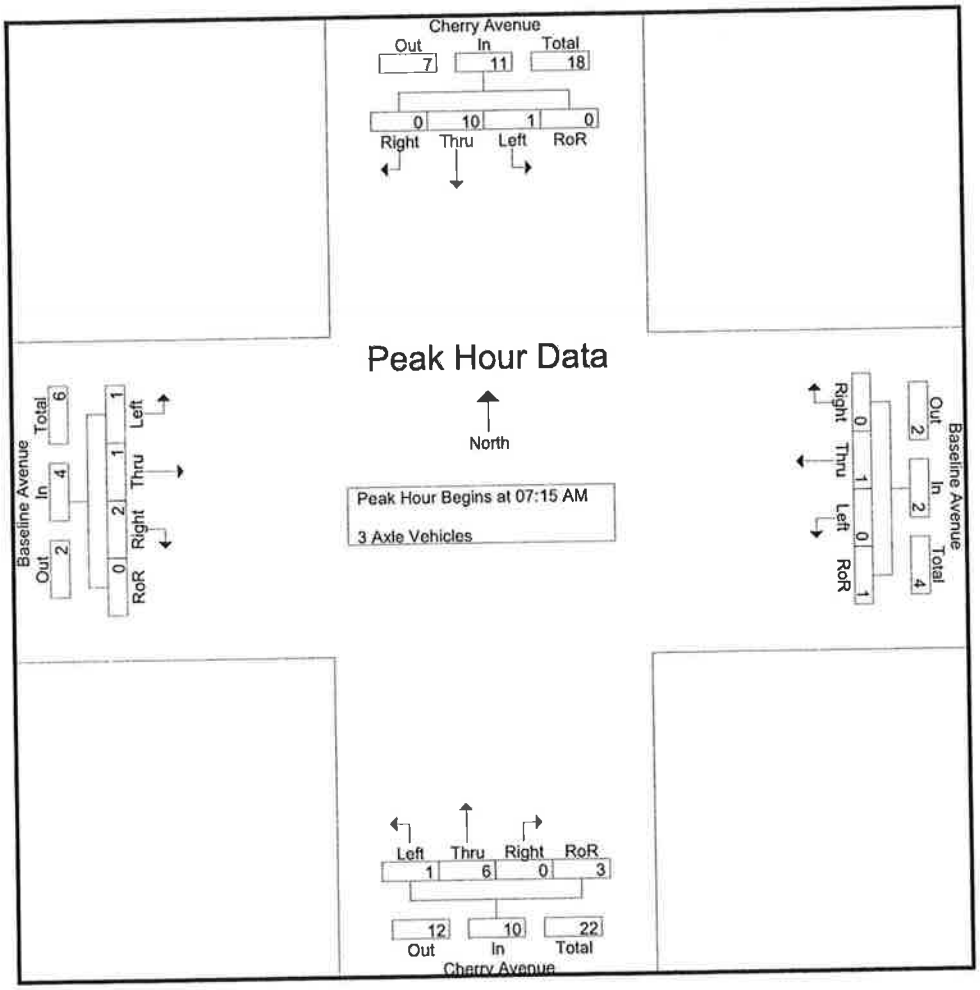

Peak Hour Analysis From 07:15 AM to 08:00 AM - Peak 1 of 1

Peak Hour for Each Approach Begins at:

	07:15 AM					07:15 AM					07:15 AM					07:15 AM				
+0 mins.	0	4	0	0	4	0	0	0	1	1	0	0	0	0	0	0	0	1	0	1
+15 mins.	0	1	0	0	1	0	0	0	0	0	1	2	0	1	4	1	0	1	0	2
+30 mins.	1	0	0	0	1	0	0	0	0	0	0	0	0	1	1	0	0	0	0	0
+45 mins.	0	5	0	0	5	0	1	0	0	1	0	4	0	1	5	0	1	0	0	1
Total Volume	1	10	0	0	11	0	1	0	1	2	1	6	0	3	10	1	1	2	0	4
% App. Total	9.1	90.9	0	0		0	50	0	50		10	60	0	30		25	25	50	0	
PHF	.250	.500	.000	.000	.550	.000	.250	.000	.250	.500	.250	.375	.000	.750	.500	.250	.250	.500	.000	.500

Counts Unlimited Inc.
25286 Jaclyn Avenue
Moreno Valley, CA 92557
951-485-7934

City of Fontana
N/S: Cherry Avenue
E/W: Baseline Avenue
Weather: Sunny

File Name : FONCHBAAM
Site Code : 9111093
Start Date : 5/6/2009
Page No : 2

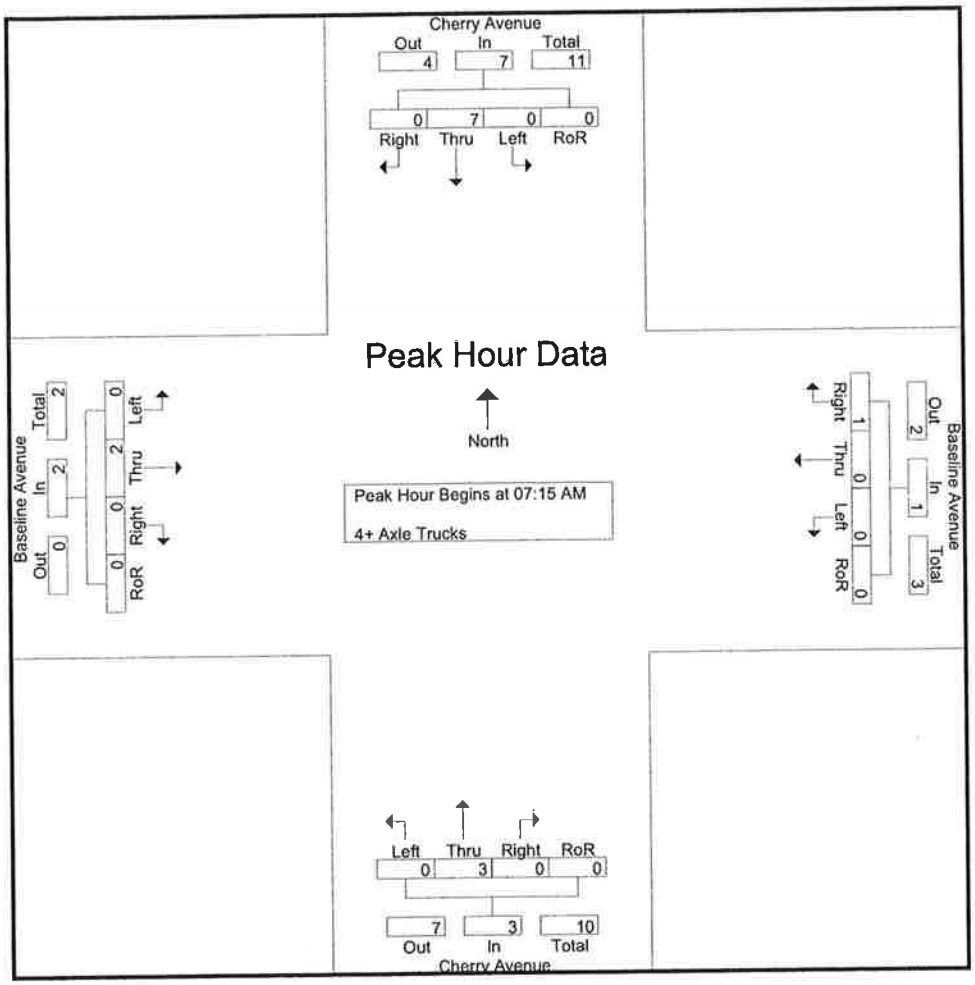

Peak Hour Analysis From 07:15 AM to 08:00 AM - Peak 1 of 1

Peak Hour for Each Approach Begins at:

	07:15 AM					07:15 AM					07:15 AM					07:15 AM				
+0 mins.	0	1	0	0	1	0	0	0	0	0	0	0	0	0	0	0	1	0	0	1
+15 mins.	0	0	0	0	0	0	0	0	0	0	0	1	0	0	1	0	0	0	0	0
+30 mins.	0	4	0	0	4	0	0	1	0	1	0	1	0	0	1	0	0	0	0	0
+45 mins.	0	2	0	0	2	0	0	0	0	0	0	1	0	0	1	0	1	0	0	1
Total Volume	0	7	0	0	7	0	0	1	0	1	0	3	0	0	3	0	2	0	0	2
% App. Total	0	100	0	0		0	0	100	0		0	100	0	0		0	100	0	0	
PHF	.000	.438	.000	.000	.438	.000	.000	.250	.000	.250	.000	.750	.000	.000	.750	.000	.500	.000	.000	.500

Counts Unlimited Inc.
25286 Jaclyn Avenue
Moreno Valley, CA 92557
951-485-7934

City of Fontana
N/S: Cherry Avenue
E/W: Baseline Avenue
Weather: Sunny

File Name : FONCHBAPM
Site Code : 9111093
Start Date : 5/6/2009
Page No : 2

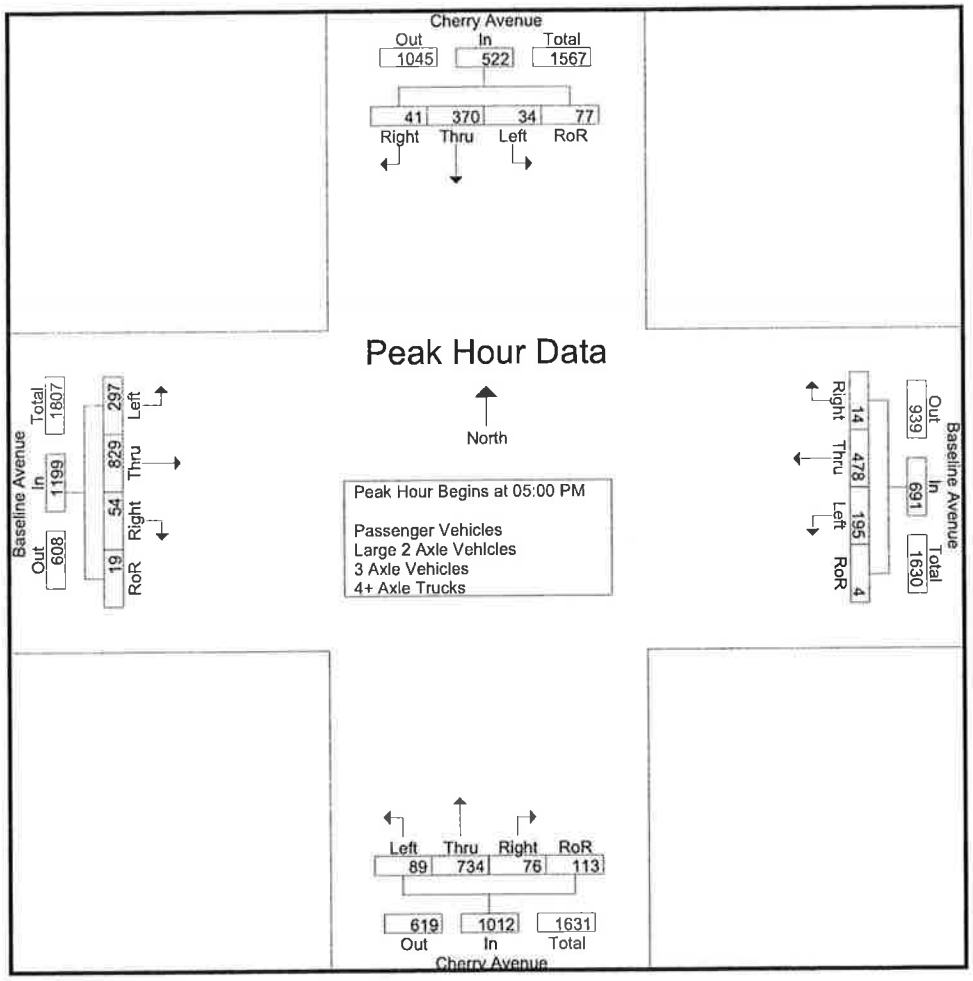

Peak Hour Analysis From 04:00 PM to 05:45 PM - Peak 1 of 1

Peak Hour for Each Approach Begins at:

	05:00 PM					04:45 PM					04:30 PM					05:00 PM				
+0 mins.	9	91	**12**	12	124	54	111	0	0	165	**40**	**214**	**27**	15	**296**	80	201	10	5	296
+15 mins.	6	**109**	8	20	143	**57**	126	0	0	**183**	19	182	26	16	243	66	204	14	4	288
+30 mins.	3	63	12	19	97	44	**132**	**6**	1	183	28	205	21	**31**	285	68	**233**	**17**	4	**322**
+45 mins.	**16**	107	**9**	**26**	**158**	50	106	3	**2**	161	21	185	22	**27**	255	**83**	191	13	**6**	293
Total Volume	34	370	41	77	522	205	475	9	3	692	108	786	96	89	1079	297	829	54	19	1199
% App. Total	6.5	70.9	7.9	14.8		29.6	68.6	1.3	0.4		10	72.8	8.9	8.2		24.8	69.1	4.5	1.6	
PHF	.531	.849	.854	.740	.826	.899	.900	.375	.375	.945	.675	.918	.889	.718	.911	.895	.889	.794	.792	.931

Counts Unlimited Inc.
25286 Jaclyn Avenue
Moreno Valley, CA 92557
951-485-7934

City of Fontana
N/S: Cherry Avenue
E/W: Baseline Avenue
Weather: Sunny

File Name : FONCHBAPM
Site Code : 9111093
Start Date : 5/6/2009
Page No : 2

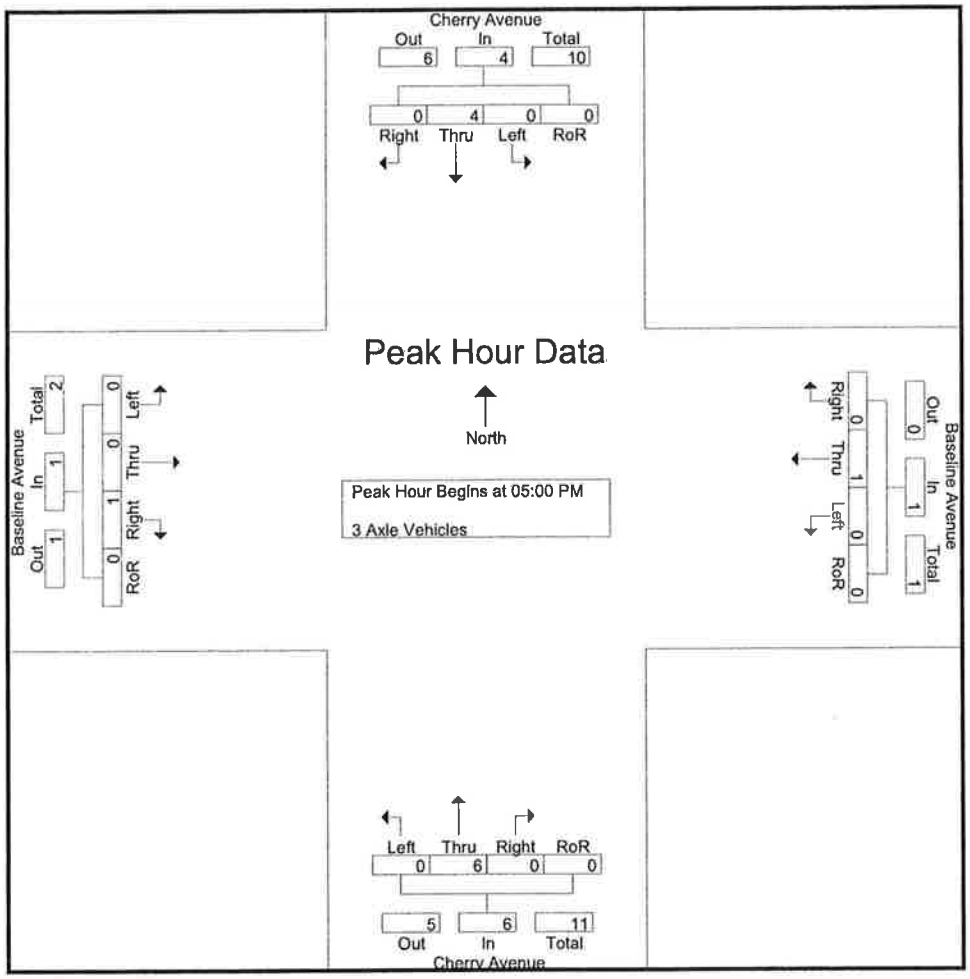

Peak Hour Analysis From 05:00 PM to 05:45 PM - Peak 1 of 1

Peak Hour for Each Approach Begins at:

	05:00 PM					05:00 PM					05:00 PM					05:00 PM				
+0 mins.	0	1	0	0	1	0	1	0	0	1	0	0	0	0	0	0	0	0	0	0
+15 mins.	0	1	0	0	1	0	0	0	0	0	0	4	0	0	4	0	0	0	0	0
+30 mins.	0	0	0	0	0	0	0	0	0	0	0	1	0	0	1	0	0	1	0	1
+45 mins.	0	2	0	0	2	0	0	0	0	0	0	1	0	0	1	0	0	0	0	0
Total Volume	0	4	0	0	4	0	1	0	0	1	0	6	0	0	6	0	0	1	0	1
% App. Total	0	100	0	0		0	100	0	0		0	100	0	0		0	0	100	0	
PHF	.000	.500	.000	.000	.500	.000	.250	.000	.000	.250	.000	.375	.000	.000	.375	.000	.000	.250	.000	.250

Counts Unlimited Inc.
25286 Jaclyn Avenue
Moreno Valley, CA 92557
951-485-7934

City of Fontana
N/S: Cherry Avenue
E/W: Baseline Avenue
Weather: Sunny

File Name : FONCHBAPM
Site Code : 9111093
Start Date : 5/6/2009
Page No : 2

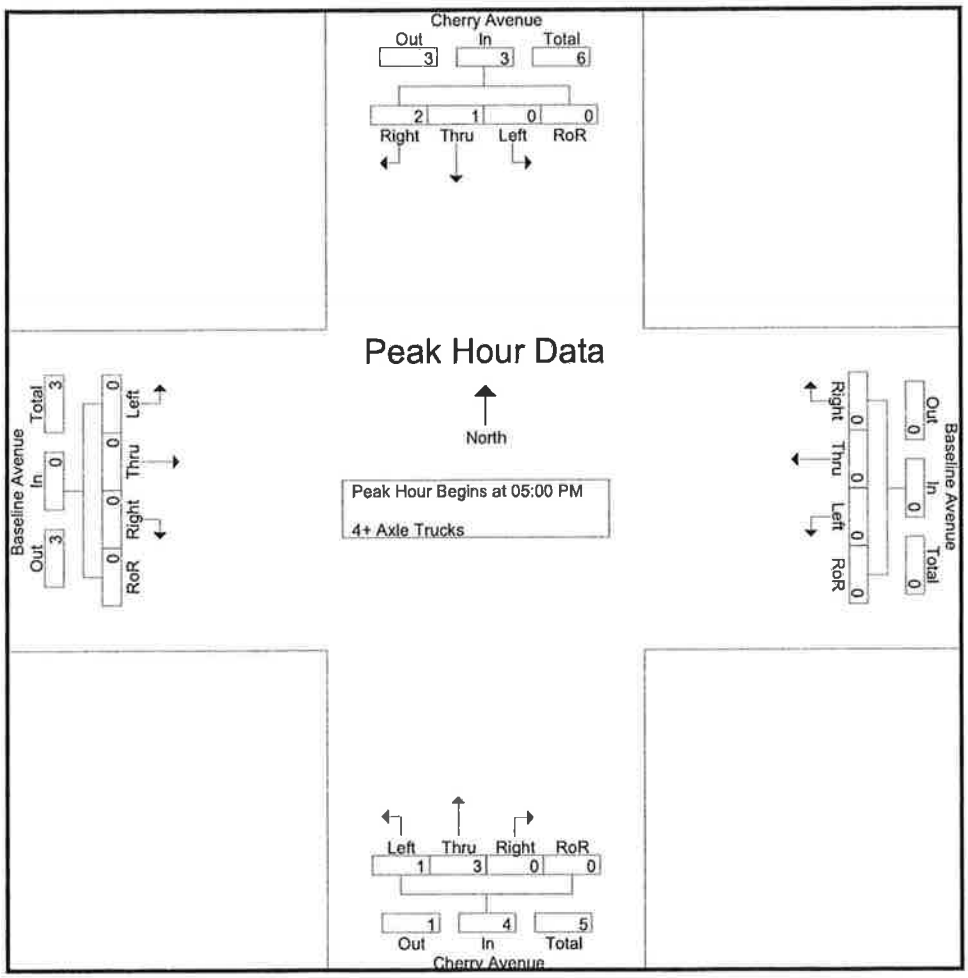

Peak Hour Analysis From 05:00 PM to 05:45 PM - Peak 1 of 1

Peak Hour for Each Approach Begins at:

	05:00 PM					05:00 PM					05:00 PM					05:00 PM				
+0 mins.	0	0	2	0	2	0	0	0	0	0	0	1	0	0	1	0	0	0	0	0
+15 mins.	0	0	0	0	0	0	0	0	0	0	1	0	0	0	1	0	0	0	0	0
+30 mins.	0	0	0	0	0	0	0	0	0	0	0	1	0	0	1	0	0	0	0	0
+45 mins.	0	1	0	0	1	0	0	0	0	0	0	1	0	0	1	0	0	0	0	0
Total Volume	0	1	2	0	3	0	0	0	0	0	1	3	0	0	4	0	0	0	0	0
% App. Total	0	33.3	66.7	0		0	0	0	0		25	75	0	0		0	0	0	0	
PHF	.000	.250	.250	.000	.375	.000	.000	.000	.000	.000	.250	.750	.000	.000	1.000	.000	.000	.000	.000	.000

Lane Group	EBL	EBT	EBR	WBL	WBT	WBR	NBL	NBT	NBR	SBL	SBT	SBR
Lane Configurations												
Ideal Flow (vphpl)	1600	1800	1800	1600	1800	1800	1600	1800	1800	1600	1800	1800
Total Lost Time (s)	4.0	4.0	4.0	4.0	4.0	4.0	4.0	4.0	4.0	4.0	4.0	4.0
Leading Detector (ft)	50	50	50	50	50	50	50	50	50	50	50	50
Trailing Detector (ft)	0	0	0	0	0	0	0	0	0	0	0	0
Turning Speed (mph)	15		9	15		9	15		9	15		9
Lane Util. Factor	0.97	0.91	1.00	0.97	0.91	1.00	0.97	0.95	1.00	0.97	0.91	1.00
Frt			0.850			0.850			0.850			0.850
Flt Protected	0.950			0.950			0.950			0.950		
Satd. Flow (prot)	2891	4818	1500	2891	4818	1500	2891	3353	1500	2891	4818	1500
Flt Permitted	0.950			0.950			0.950			0.950		
Satd. Flow (perm)	2891	4818	1500	2891	4818	1500	2891	3353	1500	2891	4818	1500
Right Turn on Red			Yes			Yes			Yes			Yes
Satd. Flow (RTOR)			137			46			69			147
Headway Factor	1.00	1.00	1.00	1.00	1.00	1.00	1.00	1.00	1.00	1.00	1.00	1.00
Link Speed (mph)		30			30			30			30	
Link Distance (ft)		1424			1664			1280			1216	
Travel Time (s)		32.4			37.8			29.1			27.6	
Volume (vph)	173	307	145	294	642	58	32	429	70	45	504	142
Peak Hour Factor	0.87	0.87	0.87	0.87	0.87	0.87	0.87	0.87	0.87	0.87	0.87	0.87
Growth Factor	89%	82%	82%	76%	71%	69%	84%	92%	86%	79%	86%	90%
Adj. Flow (vph)	177	289	137	257	524	46	31	454	69	41	498	147
Lane Group Flow (vph)	177	289	137	257	524	46	31	454	69	41	498	147
Turn Type	Prot		Perm	Prot		Perm	Prot		Perm	Prot		Perm
Protected Phases	7	4		3	8		5	2		1	6	
Permitted Phases			4			8			2			6
Detector Phases	7	4	4	3	8	8	5	2	2	1	6	6
Minimum Initial (s)	5.0	7.0	7.0	5.0	7.0	7.0	5.0	7.0	7.0	5.0	7.0	7.0
Minimum Split (s)	11.0	34.0	34.0	11.0	34.0	34.0	11.0	34.0	34.0	11.0	34.0	34.0
Total Split (s)	11.0	34.0	34.0	11.0	34.0	34.0	11.0	34.0	34.0	11.0	34.0	34.0
Total Split (%)	12.2%	37.8%	37.8%	12.2%	37.8%	37.8%	12.2%	37.8%	37.8%	12.2%	37.8%	37.8%
Maximum Green (s)	5.0	28.0	28.0	5.0	28.0	28.0	5.0	28.0	28.0	5.0	28.0	28.0
Yellow Time (s)	4.0	4.0	4.0	4.0	4.0	4.0	4.0	4.0	4.0	4.0	4.0	4.0
All-Red Time (s)	2.0	2.0	2.0	2.0	2.0	2.0	2.0	2.0	2.0	2.0	2.0	2.0
Lead/Lag	Lead	Lag	Lag	Lead	Lag	Lag	Lead	Lag	Lag	Lead	Lag	Lag
Lead-Lag Optimize?	Yes	Yes	Yes	Yes	Yes	Yes	Yes	Yes	Yes	Yes	Yes	Yes
Vehicle Extension (s)	2.0	2.0	2.0	2.0	2.0	2.0	2.0	2.0	2.0	2.0	2.0	2.0
Recall Mode	None	Min	Min	None	Min	Min	None	None	None	None	None	None
Walk Time (s)		4.0	4.0		4.0	4.0		4.0	4.0		4.0	4.0
Flash Dont Walk (s)		24.0	24.0		24.0	24.0		24.0	24.0		24.0	24.0
Pedestrian Calls (#/hr)		0	0		0	0		0	0		0	0
Act Effct Green (s)	7.3	12.1	12.1	7.4	15.0	15.0	7.1	13.3	13.3	7.1	13.3	13.3
Actuated g/C Ratio	0.14	0.25	0.25	0.15	0.31	0.31	0.13	0.27	0.27	0.13	0.27	0.27
v/c Ratio	0.43	0.24	0.29	0.59	0.35	0.09	0.08	0.50	0.15	0.11	0.38	0.29
Control Delay	26.4	16.6	5.3	31.1	16.5	7.4	25.3	16.8	5.8	25.3	15.8	4.7
Queue Delay	0.0	0.0	0.0	0.0	0.0	0.0	0.0	0.0	0.0	0.0	0.0	0.0
Total Delay	26.4	16.6	5.3	31.1	16.5	7.4	25.3	16.8	5.8	25.3	15.8	4.7
LOS	C	B	A	C	B	A	C	B	A	C	B	A
Approach Delay		16.9			20.5			15.9			14.0	

Lane Group	EBL	EBT	EBR	WBL	WBT	WBR	NBL	NBT	NBR	SBL	SBT	SBR
Approach LOS		B			C			B			B	

Intersection Summary

Area Type: Other
Cycle Length: 90
Actuated Cycle Length: 48.9
Natural Cycle: 90
Control Type: Semi Act-Uncoord
Maximum v/c Ratio: 0.59
Intersection Signal Delay: 17.1 — Intersection LOS: B
Intersection Capacity Utilization 42.6% — ICU Level of Service A
Analysis Period (min) 15

Splits and Phases: 3: Int

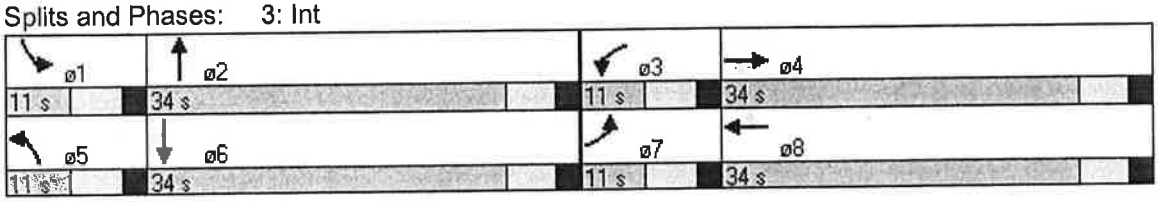

Lane Group	EBL	EBT	EBR	WBL	WBT	WBR	NBL	NBT	NBR	SBL	SBT	SBR
Lane Configurations												
Ideal Flow (vphpl)	1600	1800	1800	1600	1800	1800	1600	1800	1800	1600	1800	1800
Total Lost Time (s)	4.0	4.0	4.0	4.0	4.0	4.0	4.0	4.0	4.0	4.0	4.0	4.0
Leading Detector (ft)	50	50	50	50	50	50	50	50	50	50	50	50
Trailing Detector (ft)	0	0	0	0	0	0	0	0	0	0	0	0
Turning Speed (mph)	15		9	15		9	15		9	15		9
Lane Util. Factor	0.97	0.91	1.00	0.97	0.91	1.00	0.97	0.95	1.00	0.97	0.91	1.00
Frt			0.850			0.850			0.850			0.850
Flt Protected	0.950			0.950			0.950			0.950		
Satd. Flow (prot)	2891	4818	1500	2891	4818	1500	2891	3353	1500	2891	4818	1500
Flt Permitted	0.950			0.950			0.950			0.950		
Satd. Flow (perm)	2891	4818	1500	2891	4818	1500	2891	3353	1500	2891	4818	1500
Right Turn on Red			Yes			Yes			Yes			Yes
Satd. Flow (RTOR)			63			13			169			114
Headway Factor	1.00	1.00	1.00	1.00	1.00	1.00	1.00	1.00	1.00	1.00	1.00	1.00
Link Speed (mph)		30			30			30			30	
Link Distance (ft)		1424			1664			1280			1216	
Travel Time (s)		32.4			37.8			29.1			27.6	
Volume (vph)	297	830	74	195	479	18	91	746	189	34	376	122
Peak Hour Factor	0.96	0.96	0.96	0.96	0.96	0.96	0.96	0.96	0.96	0.96	0.96	0.96
Growth Factor	89%	82%	82%	76%	71%	69%	84%	92%	86%	79%	86%	90%
Adj. Flow (vph)	275	709	63	154	354	13	80	715	169	28	337	114
Lane Group Flow (vph)	275	709	63	154	354	13	80	715	169	28	337	114
Turn Type	Prot		Perm	Prot		Perm	Prot		Perm	Prot		Perm
Protected Phases	7	4		3	8		5	2		1	6	
Permitted Phases			4			8			2			6
Detector Phases	7	4	4	3	8	8	5	2	2	1	6	6
Minimum Initial (s)	5.0	7.0	7.0	5.0	7.0	7.0	5.0	7.0	7.0	5.0	7.0	7.0
Minimum Split (s)	11.0	34.0	34.0	11.0	33.5	33.5	11.0	34.0	34.0	11.0	34.0	34.0
Total Split (s)	11.0	34.0	34.0	11.0	33.5	33.5	11.0	34.0	34.0	11.0	34.0	34.0
Total Split (%)	12.2%	37.8%	37.8%	12.2%	37.2%	37.2%	12.2%	37.8%	37.8%	12.2%	37.8%	37.8%
Maximum Green (s)	5.0	28.0	28.0	5.0	28.0	28.0	5.0	28.0	28.0	5.0	28.0	28.0
Yellow Time (s)	4.0	4.0	4.0	4.0	3.5	3.5	4.0	4.0	4.0	4.0	4.0	4.0
All-Red Time (s)	2.0	2.0	2.0	2.0	2.0	2.0	2.0	2.0	2.0	2.0	2.0	2.0
Lead/Lag	Lead	Lag	Lag	Lead	Lag	Lag	Lead	Lag	Lag	Lead	Lag	Lag
Lead-Lag Optimize?	Yes	Yes	Yes	Yes	Yes	Yes	Yes	Yes	Yes	Yes	Yes	Yes
Vehicle Extension (s)	1.5	2.0	2.0	1.5	2.0	2.0	1.5	2.0	2.0	1.5	2.0	2.0
Recall Mode	None	Min	Min	None	Min	Min	None	None	None	None	None	None
Walk Time (s)		4.0	4.0		4.0	4.0		4.0	4.0		4.0	4.0
Flash Dont Walk (s)		24.0	24.0		24.0	24.0		24.0	24.0		24.0	24.0
Pedestrian Calls (#/hr)		0	0		0	0		0	0		0	0
Act Effct Green (s)	7.6	18.5	18.5	7.4	15.1	15.1	7.3	19.8	19.8	7.3	17.4	17.4
Actuated g/C Ratio	0.13	0.31	0.31	0.12	0.26	0.26	0.12	0.34	0.34	0.11	0.30	0.30
v/c Ratio	0.74	0.47	0.12	0.44	0.29	0.03	0.24	0.63	0.27	0.09	0.24	0.22
Control Delay	45.3	20.0	7.1	34.2	19.5	11.4	32.2	18.7	4.3	32.5	17.0	4.8
Queue Delay	0.0	0.0	0.0	0.0	0.0	0.0	0.0	0.0	0.0	0.0	0.0	0.0
Total Delay	45.3	20.0	7.1	34.2	19.5	11.4	32.2	18.7	4.3	32.5	17.0	4.8
LOS	D	C	A	C	B	B	C	B	A	C	B	A
Approach Delay		25.9			23.6			17.3			15.0	

Lane Group	EBL	EBT	EBR	WBL	WBT	WBR	NBL	NBT	NBR	SBL	SBT	SBR
Approach LOS		C			C			B			B	

Intersection Summary

Area Type: Other
Cycle Length: 90
Actuated Cycle Length: 58.9
Natural Cycle: 90
Control Type: Semi Act-Uncoord
Maximum v/c Ratio: 0.74
Intersection Signal Delay: 21.0 — Intersection LOS: C
Intersection Capacity Utilization 56.4% — ICU Level of Service B
Analysis Period (min) 15
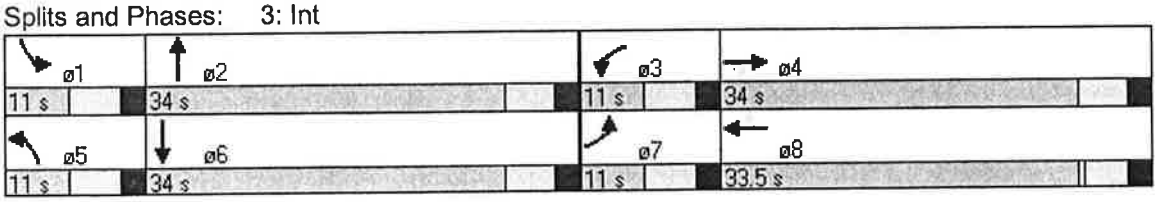
Splits and Phases: 3: Int