WEBSTER

WEbster Based Signal Timing Evaluation Routine

For Capacity and Level of Service Analysis Using HCM 2000 Control Delay

Existing Traffic with Existing Lane Geometrics

Vineyard Ave & Fourth St **City of Ontario** **AM Peak Hour**

Input

	Eastbound			Westbound			Northbound			Southbound		
Movement Times	L	T	*R*	*L*	T	R	*L*	T	R	L	*T*	R
Movement 1: 11 secs	X			X								
Movement 2: 1 secs				X	X	X						
Movement 3: 21 secs		X	X		X	X						
Movement 4: 11 secs							X			X		
Movement 5: 26 secs										X	X	X
Movement 6: 30 secs								X	X		X	X
# of Lanes (#, S, P)	2	2	1	2	2	S	1	2	S	1	2	S
Unadjusted Volume	115	252	138	241	159	59	100	750	236	84	1300	177
Peak Hour Factor (PHF)	1.00	1.00	1.00	1.00	1.00	1.00	1.00	1.00	1.00	1.00	1.00	1.00
Growth Factor (%)												
Project Trip Volume (vph)												
Sat. Flow Override (vph)						Shrd			Shrd			Shrd
Min. Time or Ped. Time	10	20	20	10	20	20	10	20	20	10	20	20
Permissive Veh/Cycle												
Progression Adj. Factor (PAF)	1.00	1.00	1.00	1.00	1.00	-	1.00	1.00	-	1.00	1.00	-

Parameter Values (using default set 'SANBAG (Existing)')

	Other	Default
Duration of Peak Period (min)		15
Lost Time (sec)		2
Min. Time (Left Turns, sec)		10
Min/Ped Time (Thru Lanes, sec)		20
Sat Flow (1 Left lane, vphg)	1700	1800
Sat Flow (2 Left lanes, vphg)	3200	3500
Sat Flow (1 Thru lane, vphg)	1800	1900
Sat Flow (1 Right lane, vphg)		1800
Vehicle Length (feet)		20

Output

			***	***			***				***	
Pk. Hr. Vol. (vph)	115	252	138	241	159	59	100	750	236	84	1300	177
Saturation Flow (vph)	3200	3600	1800	3200	3600	Shrd	1700	3600	Shrd	1700	3600	Shrd
X or V/C	0.40	0.37	0.40	0.75	0.30	-	0.65	0.98	-	0.14	0.76	-
Effective green (sec)	9	19	19	10	20	-	9	28	-	35	54	-
Split Time (sec)	11	21	21	12	22	-	11	30	-	37	56	-
Min. Time or Ped. Time (sec)	10	20	20	10	20	-	10	20	-	10	20	-
Delay - 15 min pk (sec/veh)	47	37	39	59	35	-	64	59	-	23	21	-
Level of Service (LOS)	D	D+	D+	E+	D+	-	E	E+	-	C+	C+	-
Average 'Q' (veh/ln)	1	3	3	3	2	-	3	11	-	2	9	-
Design 'Q'- ft/ln	40	100	100	100	60	-	100	340	-	60	280	-
Do Vehicles Clear?	YES	YES	YES	YES	YES	-	YES	NO	-	YES	YES	-

Summary

Whole Intersection

Weighted Avg Delay (sec) = 39
Level of Service - LOS = D+

Critical Movements

Weighted Avg Delay (sec) = 29
Level of Service - LOS = C
Intersection Capacity Utilization - ICU = 0.68

Predetermined Cycle Length is 100 sec

Min./Ped. Times Satisfied

WEBSTER

WEbster Based Signal Timing Evaluation Routine

For Capacity and Level of Service Analysis Using HCM 2000 Control Delay

Existing Traffic with Existing Lane Geometrics

Vineyard Ave & Fourth St **City of Ontario** **PM Peak Hour**

Input

	Eastbound			Westbound			Northbound			Southbound		
Movement Times	*L*	T	R	L	*T*	R	L	*T*	R	*L*	T	R
Movement 1: **11** secs	X			X								
Movement 2: **4** secs				X	X	X						
Movement 3: **20** secs		X	X		X	X						
Movement 4: **13** secs							X			X		
Movement 5: **10** secs							X	X	X			
Movement 6: **42** secs								X	X		X	X
# of Lanes (#, S, P)	**2**	2	1	2	**2**	S	1	**2**	S	**1**	2	S
Unadjusted Volume	**212**	244	113	298	**325**	121	170	**1301**	214	**158**	961	149
Peak Hour Factor (PHF)	**1.00**	1.00	1.00	1.00	**1.00**	1.00	1.00	**1.00**	1.00	**1.00**	1.00	1.00
Growth Factor (%)												
Project Trip Volume (vph)												
Sat. Flow Override (vph)						Shrd			Shrd			Shrd
Min. Time or Ped. Time	**10**	20	20	10	**20**	20	10	**20**	20	**10**	20	20
Permissive Veh/Cycle												
Progression Adj. Factor (PAF)	**1.00**	1.00	1.00	1.00	**1.00**	-	1.00	**1.00**	-	**1.00**	1.00	-

Parameter Values (using default set 'SANBAG (Existing)')

	Other	Default
Duration of Peak Period (min)		15
Lost Time (sec)		2
Min. Time (Left Turns, sec)		10
Min/Ped Time (Thru Lanes, sec)		20
Sat Flow (1 Left lane, vphg)	1700	1800
Sat Flow (2 Left lanes, vphg)	3200	3500
Sat Flow (1 Thru lane, vphg)	1800	1900
Sat Flow (1 Right lane, vphg)		1800
Vehicle Length (feet)		20

Output

	***				***			***		***		
Pk. Hr. Vol. (vph)	**212**	244	113	298	**325**	121	170	**1301**	214	**158**	961	149
Saturation Flow (vph)	**3200**	3600	1800	3200	**3600**	Shrd	1700	**3600**	Shrd	**1700**	3600	Shrd
X or V/C	**0.74**	0.38	0.35	0.72	**0.56**	-	0.48	**0.84**	-	**0.84**	0.77	-
Effective green (sec)	**9**	18	18	13	**22**	-	21	**50**	-	**11**	40	-
Split Time (sec)	**11**	20	20	15	**24**	-	23	**52**	-	**13**	42	-
Min. Time or Ped. Time (sec)	**10**	20	20	10	**20**	-	10	**20**	-	**10**	20	-
Delay - 15 min pk (sec/veh)	**60**	38	39	52	**38**	-	39	**27**	-	**79**	30	-
Level of Service (LOS)	**E+**	D+	D+	D-	**D+**	-	D+	**C**	-	**E-**	C-	-
Average 'Q' (veh/ln)	**3**	3	3	4	**5**	-	4	**11**	-	**4**	9	-
Design 'Q'- ft/ln	**100**	100	100	120	**160**	-	120	**340**	-	**120**	280	-
Do Vehicles Clear?	**YES**	YES	YES	YES	**YES**	-	YES	**YES**	-	**YES**	YES	-

Summary

Whole Intersection

Weighted Avg Delay (sec) = 35
Level of Service - LOS = D+

Critical Movements

Weighted Avg Delay (sec) = 35
Level of Service - LOS = D+
Intersection Capacity Utilization - ICU = 0.77

Predetermined Cycle Length is 100 sec

Min./Ped. Times Satisfied

Transportation Studies, Inc.

2860 Walnut Avenue, Suite C
Tustin, CA. 92780

City: ONTARIO
N-S Direction: VINEYARD AVENUE
E-W Direction: FOURTH STREET

File Name : H0905092
Site Code : 00000000
Start Date : 5/26/2009
Page No : 1

Groups Printed- VEHICLES

	VINEYARD AVENUE Southbound			FOURTH STREET Westbound			VINEYARD AVENUE Northbound			FOURTH STREET Eastbound			
Start Time	Right	Thru	Left	Right	Thru	Left	Right	Thru	Left	Right	Thru	Left	Int. Total
Factor	1.0	1.0	1.0	1.0	1.0	1.0	1.0	1.0	1.0	1.0	1.0	1.0	
07:00 AM	16	212	4	15	34	39	35	132	9	15	34	39	584
07:15 AM	19	230	8	8	47	60	20	176	9	16	48	39	680
07:30 AM	28	283	15	17	50	52	14	155	24	24	48	33	743
07:45 AM	38	279	18	13	35	53	50	159	21	30	55	25	776 ✓
Total	101	1004	45	53	166	204	119	622	63	85	185	136	2783
08:00 AM	19	225	12	8	39	53	26	148	26	18	44	34	652
08:15 AM	24	191	19	15	52	54	31	149	29	19	43	36	662
08:30 AM	20	176	19	8	41	44	38	150	14	25	46	25	606
08:45 AM	33	183	17	18	60	57	24	144	19	23	43	17	638
Total	96	775	67	49	192	208	119	591	88	85	176	112	2558
*** BREAK ***													
04:00 PM	20	185	21	22	69	60	47	249	22	29	60	40	824
04:15 PM	18	170	10	13	78	54	38	244	24	28	71	35	783
04:30 PM	21	167	21	16	89	50	37	234	21	24	70	34	784
04:45 PM	43	174	17	16	70	54	39	262	38	25	54	34	826
Total	102	696	69	67	306	218	161	989	105	106	255	143	3217
05:00 PM	22	202	21	27	85	68	45	265	25	34	56	38	888
05:15 PM	32	207	34	27	73	67	48	292	38	25	54	47	944 ✓
05:30 PM	21	158	24	16	82	57	39	301	34	34	50	49	865
05:45 PM	23	149	19	21	70	60	35	281	15	18	48	42	781
Total	98	716	98	91	310	252	167	1139	112	111	208	176	3478
Grand Total	397	3191	279	260	974	882	566	3341	368	387	824	567	12036
Apprch %	10.3	82.5	7.2	12.3	46	41.7	13.2	78.2	8.6	21.8	46.3	31.9	
Total %	3.3	26.5	2.3	2.2	8.1	7.3	4.7	27.8	3.1	3.2	6.8	4.7	

Transportation Studies, Inc.

2860 Walnut Avenue, Suite C
Tustin, CA. 92780

File Name : H0905092
Site Code : 00000000
Start Date : 5/26/2009
Page No : 2

	VINEYARD AVENUE Southbound				FOURTH STREET Westbound				VINEYARD AVENUE Northbound				FOURTH STREET Eastbound				
Start Time	Right	Thru	Left	App. Total	Right	Thru	Left	App. Total	Right	Thru	Left	App. Total	Right	Thru	Left	App. Total	Int. Total
Peak Hour Analysis From 07:00 AM to 08:45 AM - Peak 1 of 1																	
Peak Hour for Entire Intersection Begins at 07:15 AM																	
07:15 AM	19	230	8	257	8	47	**60**	115	20	**176**	9	205	16	48	**39**	103	680
07:30 AM	28	**283**	15	326	**17**	**50**	52	**119**	14	155	24	193	24	48	33	105	743
07:45 AM	**38**	279	**18**	**335**	13	35	53	101	**50**	159	21	**230**	**30**	**55**	25	**110**	**776**
08:00 AM	19	225	12	256	8	39	53	100	26	148	**26**	200	18	44	34	96	652
Total Volume	104	1017	53	1174	46	171	218	435	110	638	80	828	88	195	131	414	2851
% App. Total	8.9	86.6	4.5		10.6	39.3	50.1		13.3	77.1	9.7		21.3	47.1	31.6		
PHF	.684	.898	.736	.876	.676	.855	.908	.914	.550	.906	.769	.900	.733	.886	.840	.941	.918

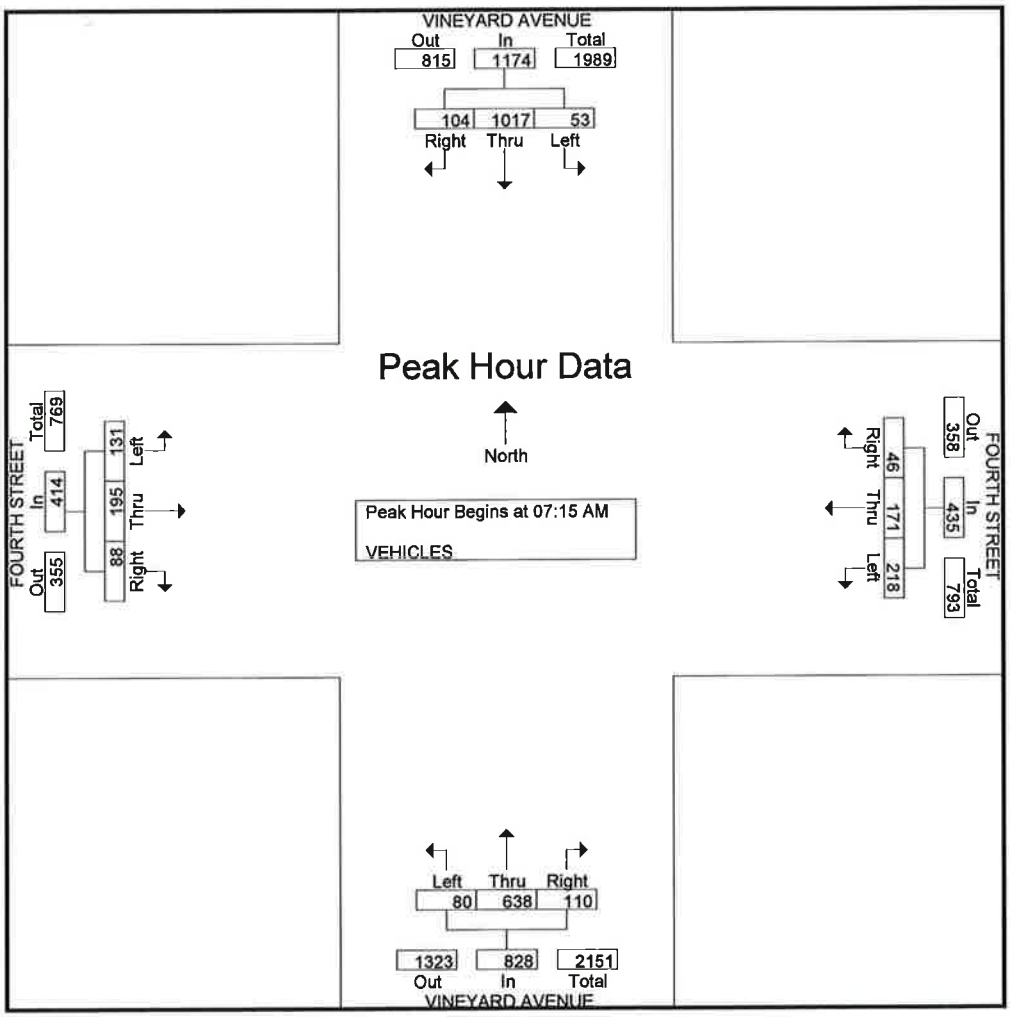

Transportation Studies, Inc.

2860 Walnut Avenue, Suite C
Tustin, CA. 92780

File Name : H0905092
Site Code : 00000000
Start Date : 5/26/2009
Page No : 3

	VINEYARD AVENUE Southbound				FOURTH STREET Westbound				VINEYARD AVENUE Northbound				FOURTH STREET Eastbound				
Start Time	Right	Thru	Left	App. Total	Right	Thru	Left	App. Total	Right	Thru	Left	App. Total	Right	Thru	Left	App. Total	Int. Total
Peak Hour Analysis From 04:00 PM to 05:45 PM - Peak 1 of 1																	
Peak Hour for Entire Intersection Begins at 04:45 PM																	
04:45 PM	**43**	174	17	234	16	70	54	140	39	262	**38**	339	25	54	34	113	826
05:00 PM	22	202	21	245	**27**	**85**	**68**	**180**	45	265	25	335	**34**	**56**	38	128	888
05:15 PM	32	**207**	**34**	**273**	27	73	67	167	**48**	292	38	**378**	25	54	47	126	**944**
05:30 PM	21	158	24	203	16	82	57	155	39	**301**	34	374	34	50	**49**	**133**	865
Total Volume	118	741	96	955	86	310	246	642	171	1120	135	1426	118	214	168	500	3523
% App. Total	12.4	77.6	10.1		13.4	48.3	38.3		12	78.5	9.5		23.6	42.8	33.6		
PHF	.686	.895	.706	.875	.796	.912	.904	.892	.891	.930	.888	.943	.868	.955	.857	.940	.933

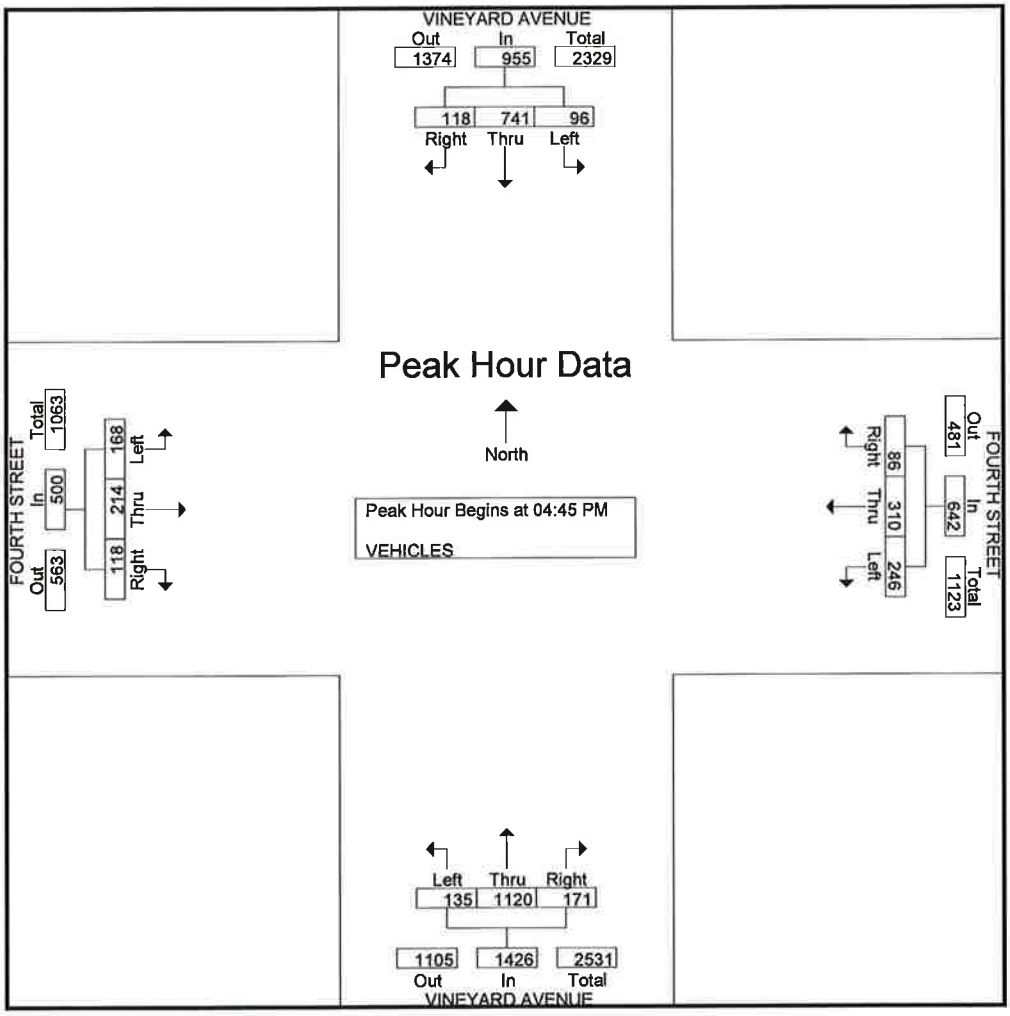

Transportation Studies, Inc.
2680 Walnut Avenue, Suite C
Tustin, CA. 92780

Location: VINEYARD AVENUE
Segment: S/O FOURTH STREET

A0906064N
Site Code: ONTARIO

RTHBOUND1, NORTHBOUND2

Start Time	Bikes	Cars & Trailers	2 Axle Long	Buses	2 Axle 6 Tire	3 Axle Single	4 Axle Single	<5 Axl Double	5 Axle Double	>6 Axl Double	<6 Axl Multi	6 Axle Multi	>6 Axl Multi	Total
06/02/09	0	37	7	0	0	1	0	0	0	0	0	0	0	45
00:15	0	30	6	0	0	0	0	0	1	0	0	0	0	37
00:30	1	27	4	0	0	0	0	0	0	0	0	0	0	32
00:45	0	23	3	0	0	0	0	0	0	0	0	0	0	26
	1	117	20	0	0	1	0	0	1	0	0	0	0	140
01:00	0	20	4	0	0	0	0	0	0	0	0	0	0	24
01:15	0	11	3	0	0	0	0	0	1	0	0	0	0	15
01:30	0	23	3	0	1	0	0	0	0	0	0	0	0	27
01:45	0	20	4	0	0	0	0	0	0	0	0	0	0	24
	0	74	14	0	1	0	0	0	1	0	0	0	0	90
02:00	0	19	4	0	0	0	0	0	0	0	0	0	0	23
02:15	0	12	6	0	1	1	0	1	1	0	0	0	0	22
02:30	0	21	6	0	1	0	0	0	0	0	0	0	0	28
02:45	0	11	6	0	1	0	0	0	0	0	0	0	0	18
	0	63	22	0	3	1	0	1	1	0	0	0	0	91
03:00	0	18	3	0	0	0	0	0	2	0	0	0	0	23
03:15	0	14	3	0	0	0	0	0	1	0	0	0	0	18
03:30	0	11	4	0	0	0	0	0	0	0	0	0	0	15
03:45	0	13	6	0	0	0	0	0	1	0	0	0	0	20
	0	56	16	0	0	0	0	0	4	0	0	0	0	76
04:00	0	11	9	0	1	0	0	0	3	0	0	0	0	24
04:15	0	18	3	0	0	0	0	0	0	0	0	0	0	21
04:30	1	24	5	0	1	0	0	1	1	0	0	0	0	33
04:45	0	26	14	0	3	0	0	0	0	0	0	0	0	43
	1	79	31	0	5	0	0	1	4	0	0	0	0	121
05:00	0	27	9	1	3	0	0	1	1	0	0	0	0	42
05:15	0	40	13	1	4	1	0	0	1	0	0	0	0	60
05:30	0	31	11	1	4	1	0	0	0	0	0	0	0	48
05:45	0	64	27	0	5	0	0	0	0	0	0	0	0	96
	0	162	60	3	16	2	0	1	2	0	0	0	0	246
06:00	0	55	21	2	2	2	0	1	1	0	0	0	0	84
06:15	0	65	27	0	3	1	0	1	1	0	0	0	0	98
06:30	1	82	23	0	6	1	0	1	1	0	0	0	0	115
06:45	0	86	25	1	8	1	0	6	0	0	0	0	0	127
	1	288	96	3	19	5	0	9	3	0	0	0	0	424
07:00	0	110	29	1	6	0	0	5	1	0	0	0	0	152
07:15	1	107	32	0	17	0	0	2	0	0	0	0	0	159
07:30	0	120	25	1	4	1	0	4	0	0	0	0	0	155
07:45	2	108	31	1	8	2	0	3	0	0	0	0	0	155
	3	445	117	3	35	3	0	14	1	0	0	0	0	621
08:00	0	107	46	1	5	0	0	2	2	0	0	0	0	163
08:15	0	122	27	2	11	0	0	2	1	0	0	0	0	165
08:30	0	105	37	0	7	0	0	0	1	0	0	0	0	150
08:45	1	91	30	1	8	2	0	2	0	0	0	0	0	135
	1	425	140	4	31	2	0	6	4	0	0	0	0	613
09:00	0	101	35	1	8	0	0	0	2	0	0	0	0	147
09:15	0	84	22	2	11	0	0	3	1	0	0	0	0	123
09:30	1	94	35	2	7	2	0	1	2	0	0	0	0	144
09:45	0	95	35	0	9	0	0	1	2	0	0	0	0	142
	1	374	127	5	35	2	0	5	7	0	0	0	0	556
10:00	0	92	31	0	7	2	0	1	1	0	0	0	0	134
10:15	1	93	29	3	8	0	0	3	0	0	0	0	0	137
10:30	3	84	33	1	6	3	0	3	3	0	0	0	0	136
10:45	1	85	34	2	10	0	0	1	3	0	0	0	0	136
	5	354	127	6	31	5	0	8	7	0	0	0	0	543
11:00	0	99	27	2	11	1	0	2	2	0	0	0	0	144
11:15	0	100	25	2	5	0	0	0	4	0	0	0	0	136
11:30	0	111	33	4	8	1	0	2	1	0	0	0	0	160
11:45	1	114	26	1	6	0	0	2	2	0	0	0	0	152
	1	424	111	9	30	2	0	6	9	0	0	0	0	592
Total	14	2861	881	33	206	23	0	51	44	0	0	0	0	4113
Percent	0.3%	69.6%	21.4%	0.8%	5.0%	0.6%	0.0%	1.2%	1.1%	0.0%	0.0%	0.0%	0.0%	

√6,18

Transportation Studies, Inc.
2680 Walnut Avenue, Suite C
Tustin, CA. 92780

Location: VINEYARD AVENUE
Segment: S/O FOURTH STREET

A0906064N
Site Code: ONTARIO

RTHBOUND1, NORTHBOUND2

Start Time	Bikes	Cars & Trailers	2 Axle Long	Buses	2 Axle 6 Tire	3 Axle Single	4 Axle Single	<5 Axl Double	5 Axle Double	>6 Axl Double	<6 Axl Multi	6 Axle Multi	>6 Axl Multi	Total
12 PM	1	102	41	1	8	0	0	1	2	0	0	0	0	156
12:15	0	108	36	2	10	0	0	3	0	0	0	1	1	161
12:30	1	96	31	1	10	1	0	2	0	0	0	0	0	142
12:45	0	120	34	3	7	2	0	0	1	0	0	0	0	167
	2	426	142	7	35	3	0	6	3	0	0	1	1	626
13:00	2	99	29	2	8	0	0	1	2	0	0	0	0	143
13:15	2	111	37	2	9	0	0	1	3	0	0	0	0	165
13:30	1	103	35	2	14	2	0	3	0	0	0	0	0	160
13:45	0	92	31	2	9	1	0	0	1	0	0	0	0	136
	5	405	132	8	40	3	0	5	6	0	0	0	0	604
14:00	0	111	32	1	7	0	0	0	2	0	0	0	0	153
14:15	0	112	34	1	10	0	0	1	0	0	0	0	0	158
14:30	1	133	36	1	2	1	0	1	0	0	0	0	0	175
14:45	2	112	29	3	9	3	0	1	0	0	0	0	0	159
	3	468	131	6	28	4	0	3	2	0	0	0	0	645
15:00	0	161	39	0	12	1	0	1	1	0	0	0	1	216
15:15	1	166	52	0	5	1	0	1	1	0	0	0	0	227
15:30	0	164	48	2	12	0	0	1	0	0	0	0	0	227
15:45	1	219	56	2	13	0	0	3	1	0	0	0	0	295
	2	710	195	4	42	2	0	6	3	0	0	0	1	965
16:00	0	151	47	0	7	0	0	0	0	0	0	0	0	205
16:15	0	163	40	2	7	0	0	2	1	0	0	0	0	215
16:30	0	215	53	1	9	0	0	0	1	0	0	0	0	279
16:45	1	198	48	3	11	0	0	0	3	0	0	0	0	264
	1	727	188	6	34	0	0	2	5	0	0	0	0	963
17:00	2	187	35	1	5	0	0	4	0	0	0	0	0	234
17:15	2	193	44	1	5	2	0	3	0	0	0	0	0	250
17:30	1	201	42	0	5	1	0	1	0	0	0	0	0	251
17:45	0	203	37	0	4	0	0	1	0	0	0	0	0	245
	5	784	158	2	19	3	0	9	0	0	0	0	0	980 975
18:00	0	180	52	1	10	0	0	1	1	0	0	0	0	245
18:15	1	179	42	1	5	0	0	1	1	0	0	0	0	230
18:30	2	182	39	0	3	0	0	1	0	0	0	0	0	227
18:45	1	173	38	0	6	0	0	0	0	0	0	0	0	218
	4	714	171	2	24	0	0	3	2	0	0	0	0	920
19:00	0	146	21	0	6	0	0	0	0	0	0	0	0	173
19:15	0	114	36	1	4	0	0	0	0	0	0	0	0	155
19:30	0	149	24	0	1	0	0	0	0	0	0	0	0	174
19:45	0	135	29	0	4	0	0	0	1	0	0	0	0	169
	0	544	110	1	15	0	0	0	1	0	0	0	0	671
20:00	0	131	30	1	1	0	0	1	0	0	0	0	0	164
20:15	0	125	23	1	3	1	0	0	0	0	0	0	0	153
20:30	0	115	32	0	6	0	0	0	0	0	0	0	0	153
20:45	0	105	28	0	4	0	0	1	0	0	0	0	0	138
	0	476	113	2	14	1	0	2	0	0	0	0	0	608
21:00	0	129	28	0	2	0	0	1	0	0	0	0	0	160
21:15	0	113	18	0	3	0	0	0	0	0	0	0	0	134
21:30	0	72	17	0	2	0	0	0	0	0	0	0	0	91
21:45	0	66	9	0	1	0	0	1	0	0	0	0	0	77
	0	380	72	0	8	0	0	2	0	0	0	0	0	462
22:00	0	59	14	1	1	0	0	0	0	0	0	0	0	75
22:15	0	59	9	0	1	0	0	0	1	0	0	0	0	70
22:30	0	46	15	0	3	0	0	0	0	0	0	0	0	64
22:45	1	39	13	0	1	0	0	0	0	0	0	0	0	54
	1	203	51	1	6	0	0	0	1	0	0	0	0	263
23:00	0	38	12	0	1	0	0	0	1	0	0	0	0	52
23:15	0	36	6	1	2	0	0	0	0	0	0	0	0	45
23:30	0	21	5	0	0	0	0	0	1	0	0	0	0	27
23:45	0	27	4	0	1	0	0	0	0	0	0	0	0	32
	0	122	27	1	4	0	0	0	2	0	0	0	0	156
Total	23	5959	1490	40	269	16	0	38	25	0	0	1	2	7863
Percent	0.3%	75.8%	18.9%	0.5%	3.4%	0.2%	0.0%	0.5%	0.3%	0.0%	0.0%	0.0%	0.0%	
Grand Total	37	8820	2371	73	475	39	0	89	69	0	0	1	2	11976
Percent	0.3%	73.6%	19.8%	0.6%	4.0%	0.3%	0.0%	0.7%	0.6%	0.0%	0.0%	0.0%	0.0%	

Transportation Studies, Inc.
2680 Walnut Avenue, Suite C
Tustin, CA. 92780

Location: VINEYARD AVENUE
Segment: S/O FOURTH STREET

A0906064S
Site Code: ONTARIO

`UTHBOUND1, SOUTHBOUND2

Start Time	Bikes	Cars & Trailers	2 Axle Long	Buses	2 Axle 6 Tire	3 Axle Single	4 Axle Single	<5 Axl Double	5 Axle Double	>6 Axl Double	<6 Axl Multi	6 Axle Multi	>6 Axl Multi	Total
06/02/09	0	26	6	0	2	0	0	0	0	0	0	0	0	34
00:15	0	18	7	0	1	0	0	0	0	0	0	0	0	26
00:30	0	23	4	0	2	0	0	0	0	0	0	0	0	29
00:45	0	13	6	0	0	0	0	0	1	0	0	0	0	20
	0	80	23	0	5	0	0	0	1	0	0	0	0	109
01:00	0	13	3	0	0	0	0	0	0	0	0	0	0	16
01:15	0	13	2	0	1	0	0	0	1	0	0	0	0	17
01:30	0	18	4	0	0	0	0	0	2	0	0	0	0	24
01:45	0	17	3	0	0	0	0	0	0	0	0	0	0	20
	0	61	12	0	1	0	0	0	3	0	0	0	0	77
02:00	0	5	1	0	3	0	0	0	0	0	0	0	0	9
02:15	0	11	5	0	2	0	0	0	0	0	0	0	0	18
02:30	0	11	11	0	0	0	0	0	0	0	0	0	0	22
02:45	0	12	6	0	2	0	0	0	0	0	0	0	0	20
	0	39	23	0	7	0	0	0	0	0	0	0	0	69
03:00	0	8	6	0	0	0	0	0	0	0	0	0	0	14
03:15	0	18	10	0	0	1	0	0	0	0	0	0	0	29
03:30	0	23	5	0	1	0	0	0	0	0	0	0	0	29
03:45	0	24	9	0	1	0	0	0	0	0	0	0	0	34
	0	73	30	0	2	1	0	0	0	0	0	0	0	106
04:00	0	28	13	1	1	0	0	0	1	0	0	0	0	44
04:15	0	35	16	1	1	0	0	0	0	0	0	0	0	53
04:30	0	59	22	2	5	0	0	2	1	0	0	0	0	91
04:45	1	51	21	2	7	0	0	0	1	0	0	0	0	83
	1	173	72	6	14	0	0	2	3	0	0	0	0	271
05:00	0	65	41	0	4	2	0	0	2	0	0	0	0	114
05:15	0	95	35	0	7	0	0	0	1	0	0	0	0	138
05:30	1	90	45	1	9	0	0	0	2	0	0	0	0	148
05:45	2	89	39	3	4	0	0	0	4	0	0	0	0	141
	3	339	160	4	24	2	0	0	9	0	0	0	0	541
06:00	0	124	40	1	8	0	0	1	1	0	0	0	0	175
06:15	0	118	42	1	12	0	0	0	3	0	0	0	0	176
06:30	1	193	61	0	12	0	0	1	0	0	0	0	0	268
06:45	0	159	65	1	11	0	0	1	1	0	0	0	0	238
	1	594	208	3	43	0	0	3	5	0	0	0	0	857
07:00	0	184	59	1	5	1	0	2	2	0	0	0	0	254
07:15	2	229	71	3	6	0	0	1	6	0	1	0	0	319
07:30	0	274	80	2	15	0	0	3	1	0	0	0	0	375
07:45	0	236	71	2	13	0	0	4	2	0	0	0	0	328
	2	923	281	8	39	1	0	10	11	0	1	0	0	1276 ✓1274
08:00	0	207	59	0	12	0	0	0	2	0	0	0	0	280
08:15	1	181	53	1	7	1	0	4	0	0	0	0	0	248
08:30	2	179	50	2	5	2	0	2	0	0	0	0	0	242
08:45	1	139	43	4	7	0	0	2	1	0	0	0	0	197
	4	706	205	7	31	3	0	8	3	0	0	0	0	967
09:00	0	137	39	1	10	0	0	1	1	0	0	0	0	189
09:15	0	132	49	0	13	2	0	4	1	0	0	0	0	201
09:30	1	134	59	0	9	1	0	3	3	0	0	0	0	210
09:45	1	123	52	2	11	3	0	0	1	0	0	0	0	193
	2	526	199	3	43	6	0	8	6	0	0	0	0	793
10:00	2	108	31	0	12	1	0	1	1	0	0	0	0	156
10:15	0	139	41	1	15	0	0	1	2	0	0	0	0	199
10:30	1	107	43	0	15	0	0	2	0	0	0	0	0	168
10:45	0	119	49	3	8	0	0	4	0	0	0	0	0	183
	3	473	164	4	50	1	0	8	3	0	0	0	0	706
11:00	1	133	43	0	15	1	0	1	3	0	0	0	0	197
11:15	0	126	45	2	18	0	0	1	1	0	0	0	0	193
11:30	0	114	42	0	7	0	0	0	3	0	0	0	0	166
11:45	0	150	39	2	9	0	0	1	0	0	0	0	0	201
	1	523	169	4	49	1	0	3	7	0	0	0	0	757
Total	17	4510	1546	39	308	15	0	42	51	0	1	0	0	6529
Percent	0.3%	69.1%	23.7%	0.6%	4.7%	0.2%	0.0%	0.6%	0.8%	0.0%	0.0%	0.0%	0.0%	

Transportation Studies, Inc.
2680 Walnut Avenue, Suite C
Tustin, CA. 92780

Location: VINEYARD AVENUE
Segment: S/O FOURTH STREET

A0906064S
Site Code: ONTARIO

UTHBOUND1, SOUTHBOUND2

Start Time	Bikes	Cars & Trailers	2 Axle Long	Buses	2 Axle 6 Tire	3 Axle Single	4 Axle Single	<5 Axl Double	5 Axle Double	>6 Axl Double	<6 Axl Multi	6 Axle Multi	>6 Axl Multi	Total
12 PM	0	146	54	2	7	1	0	1	1	0	0	0	0	212
12:15	1	142	52	3	9	2	0	3	2	0	0	0	0	214
12:30	1	163	55	0	12	0	0	1	1	0	1	0	0	234
12:45	0	173	46	1	13	2	0	2	2	0	0	0	0	239
	2	624	207	6	41	5	0	7	6	0	1	0	0	899
13:00	0	176	66	1	15	0	0	2	0	0	0	0	0	260
13:15	1	152	44	0	9	1	0	0	3	0	0	0	0	210
13:30	1	154	50	2	8	2	0	2	1	0	0	0	0	220
13:45	0	166	57	2	7	1	0	0	1	0	0	0	0	234
	2	648	217	5	39	4	0	4	5	0	0	0	0	924
14:00	0	175	53	1	10	1	0	1	0	0	0	0	0	241
14:15	1	159	39	3	13	1	0	1	0	0	0	0	0	217
14:30	2	174	60	1	22	0	0	2	0	0	0	0	0	261
14:45	0	205	63	1	15	0	0	4	1	0	0	0	0	289
	3	713	215	6	60	2	0	8	1	0	0	0	0	1008 ✓ 1065
15:00	0	180	54	1	12	0	0	0	2	0	0	0	0	249
15:15	0	167	36	0	14	0	0	2	1	0	0	0	0	220
15:30	1	188	60	2	9	0	0	0	2	0	1	0	0	263
15:45	0	173	47	0	8	0	0	5	1	0	0	0	0	234
	1	708	197	3	43	0	0	7	6	0	1	0	0	966
16:00	0	181	51	3	12	1	0	3	0	0	0	0	0	251
16:15	2	192	46	3	7	0	0	5	2	0	0	0	0	257
16:30	0	176	36	0	16	1	0	3	2	0	0	0	0	234
16:45	0	177	55	0	8	0	0	0	0	0	0	0	0	240
	2	726	188	6	43	2	0	11	4	0	0	0	0	982
17:00	1	209	50	2	3	0	0	2	0	0	0	0	0	267
17:15	1	197	51	0	9	0	0	2	1	0	0	0	0	261
17:30	1	170	52	1	10	0	0	2	0	0	0	0	0	236
17:45	1	152	46	1	5	0	0	1	1	0	0	0	0	207
	4	728	199	4	27	0	0	7	2	0	0	0	0	971
18:00	2	200	48	1	3	0	0	0	1	0	0	0	0	255
18:15	2	122	43	1	3	1	0	0	1	0	0	0	0	173
18:30	0	146	51	0	6	1	0	0	0	0	0	0	0	204
18:45	0	151	37	0	2	0	0	0	0	0	0	0	0	190
	4	619	179	2	14	2	0	0	2	0	0	0	0	822
19:00	0	129	34	0	6	0	0	0	1	0	0	0	0	170
19:15	0	144	35	2	5	0	0	1	0	0	0	0	0	187
19:30	0	119	28	0	5	0	0	0	0	0	0	0	0	152
19:45	0	116	30	0	4	0	0	0	0	0	0	0	0	150
	0	508	127	2	20	0	0	1	1	0	0	0	0	659
20:00	0	120	23	0	5	0	0	0	1	0	0	0	0	149
20:15	0	105	29	1	3	0	0	0	0	0	0	0	0	138
20:30	0	126	25	1	4	0	0	0	0	0	0	0	0	156
20:45	0	110	30	0	4	0	0	0	0	0	0	0	0	144
	0	461	107	2	16	0	0	0	1	0	0	0	0	587
21:00	0	112	23	0	3	0	0	0	0	0	0	0	0	138
21:15	1	80	25	0	2	1	0	1	0	0	0	0	0	110
21:30	1	81	26	0	5	0	0	0	0	0	0	0	0	113
21:45	2	86	16	0	5	1	0	0	1	0	0	0	0	111
	4	359	90	0	15	2	0	1	1	0	0	0	0	472
22:00	1	69	19	0	1	0	0	0	0	0	0	0	0	90
22:15	0	67	20	1	1	0	0	0	0	0	0	0	0	89
22:30	0	64	7	0	2	0	0	0	0	0	0	0	0	73
22:45	1	48	13	0	2	0	0	0	0	0	0	0	0	64
	2	248	59	1	6	0	0	0	0	0	0	0	0	316
23:00	0	58	14	0	1	0	0	0	1	0	0	0	0	74
23:15	0	41	8	0	2	0	0	0	0	0	0	0	0	51
23:30	0	46	7	0	1	0	0	0	0	0	0	0	0	54
23:45	0	39	5	0	0	0	0	0	0	0	0	0	0	44
	0	184	34	0	4	0	0	0	1	0	0	0	0	223
Total	24	6526	1819	37	328	17	0	46	30	0	2	0	0	8829
Percent	0.3%	73.9%	20.6%	0.4%	3.7%	0.2%	0.0%	0.5%	0.3%	0.0%	0.0%	0.0%	0.0%	
Grand Total	41	11036	3365	76	636	32	0	88	81	0	3	0	0	15358
Percent	0.3%	71.9%	21.9%	0.5%	4.1%	0.2%	0.0%	0.6%	0.5%	0.0%	0.0%	0.0%	0.0%	

Transportation Studies, Inc.
2680 Walnut Avenue, Suite C
Tustin, CA. 92780

Location: FOURTH STREET
Segment: E/O VINEYARD AVENUE

A0906062E
Site Code: ONTARIO

STBOUND1, EASTBOUND2

Start Time	Bikes	Cars & Trailers	2 Axle Long	Buses	2 Axle 6 Tire	3 Axle Single	4 Axle Single	<5 Axl Double	5 Axle Double	>6 Axl Double	<6 Axl Multi	6 Axle Multi	>6 Axl Multi	Total
06/02/09	0	11	5	0	1	0	0	0	0	0	0	0	0	17
00:15	0	5	0	0	0	0	0	0	0	0	0	0	0	5
00:30	0	6	2	0	0	0	0	0	0	0	0	0	0	8
00:45	0	8	1	0	0	0	0	0	0	0	0	0	0	9
	0	30	8	0	1	0	0	0	0	0	0	0	0	39
01:00	0	5	1	0	0	0	0	0	0	0	0	0	0	6
01:15	0	7	4	0	0	0	0	0	1	0	0	0	0	12
01:30	0	5	2	0	0	0	0	0	0	0	0	0	0	7
01:45	0	6	1	0	0	0	0	0	0	0	0	0	0	7
	0	23	8	0	0	0	0	0	1	0	0	0	0	32
02:00	0	9	1	0	0	0	0	0	0	0	0	0	0	10
02:15	0	5	3	0	0	0	0	0	0	0	0	0	0	8
02:30	0	8	2	0	0	0	0	0	0	0	0	0	0	10
02:45	0	4	1	1	1	0	0	0	0	0	0	0	0	7
	0	26	7	1	1	0	0	0	0	0	0	0	0	35
03:00	0	7	0	0	0	0	0	0	0	0	0	0	0	7
03:15	0	5	1	0	0	0	0	0	0	0	0	0	0	6
03:30	0	5	3	0	0	0	0	0	0	0	0	0	0	8
03:45	0	6	3	0	1	0	0	0	0	0	0	0	0	10
	0	23	7	0	1	0	0	0	0	0	0	0	0	31
04:00	0	9	5	0	1	0	0	0	1	0	0	0	0	16
04:15	0	7	1	0	1	0	0	0	0	0	0	0	0	9
04:30	0	10	3	1	0	0	0	0	0	0	0	0	0	14
04:45	0	11	6	0	1	0	0	0	0	0	0	0	0	18
	0	37	15	1	3	0	0	0	1	0	0	0	0	57
05:00	0	10	5	0	0	0	0	0	0	0	0	0	0	15
05:15	0	14	6	0	0	0	0	0	0	0	0	0	0	20
05:30	0	19	10	0	0	0	0	0	0	0	0	0	0	29
05:45	0	26	10	0	3	0	0	0	0	0	0	0	0	39
	0	69	31	0	3	0	0	0	0	0	0	0	0	103
06:00	0	22	4	0	1	0	0	1	0	0	0	0	0	28
06:15	0	21	9	1	0	0	0	0	1	0	0	0	0	32
06:30	0	36	12	1	7	0	0	0	1	0	0	0	0	57
06:45	0	36	18	2	3	0	0	2	0	0	0	0	0	61
	0	115	43	4	11	0	0	3	2	0	0	0	0	178
07:00	0	44	17	1	1	0	0	0	0	0	0	0	0	63
07:15	0	61	20	0	3	0	0	0	1	0	0	0	0	85
07:30	1	49	18	0	1	0	0	0	0	0	0	0	0	69
07:45	0	91	16	1	1	1	0	0	1	0	0	0	0	111
	1	245	71	2	6	1	0	0	2	0	0	0	0	328
08:00	0	51	23	0	1	1	0	0	0	0	0	0	0	76
08:15	0	63	10	0	6	0	0	0	0	0	0	0	0	79
08:30	0	58	20	0	4	0	0	0	1	0	0	0	0	83
08:45	3	49	12	0	3	1	0	0	1	0	0	0	0	69
	3	221	65	0	14	2	0	0	2	0	0	0	0	307
09:00	3	57	19	0	4	2	0	0	4	0	0	0	0	89
09:15	0	50	16	0	3	1	0	0	0	0	0	0	0	70
09:30	0	39	19	2	4	0	0	0	0	0	0	0	0	64
09:45	0	56	12	0	3	0	0	1	1	0	0	0	0	73
	3	202	66	2	14	3	0	1	5	0	0	0	0	296
10:00	0	47	22	1	1	1	0	0	0	0	0	0	0	72
10:15	0	51	13	0	1	0	0	0	0	0	0	0	0	65
10:30	1	50	11	2	4	0	0	0	0	0	0	0	0	68
10:45	1	55	26	2	5	0	0	0	0	0	0	0	0	89
	2	203	72	5	11	1	0	0	0	0	0	0	0	294
11:00	1	66	17	0	3	0	0	1	1	0	0	0	0	89
11:15	0	57	11	1	3	1	0	0	0	0	0	0	0	73
11:30	0	63	22	1	1	0	0	0	2	0	0	0	0	89
11:45	0	82	19	1	5	0	0	0	0	0	0	0	0	107
	1	268	69	3	12	1	0	1	3	0	0	0	0	358 ✓
Total	10	1462	462	18	77	8	0	5	16	0	0	0	0	2058
Percent	0.5%	71.0%	22.4%	0.9%	3.7%	0.4%	0.0%	0.2%	0.8%	0.0%	0.0%	0.0%	0.0%	357

Transportation Studies, Inc.
2680 Walnut Avenue, Suite C
Tustin, CA. 92780

Location: FOURTH STREET
Segment: E/O VINEYARD AVENUE

A0906062E
Site Code: ONTARIO

STBOUND1, EASTBOUND2

Start Time	Bikes	Cars & Trailers	2 Axle Long	Buses	2 Axle 6 Tire	3 Axle Single	4 Axle Single	<5 Axl Double	5 Axle Double	>6 Axl Double	<6 Axl Multi	6 Axle Multi	>6 Axl Multi	Total
12 PM	0	83	22	0	2	0	0	0	0	0	0	0	0	107
12:15	1	84	25	0	4	1	0	0	1	0	0	0	0	116
12:30	1	73	23	1	6	0	0	2	0	0	0	0	0	106
12:45	0	72	19	0	9	2	0	1	0	0	0	0	0	103
	2	312	89	1	21	3	0	3	1	0	0	0	0	432
13:00	1	68	32	0	3	1	0	0	1	0	0	0	0	106
13:15	0	81	22	1	4	2	0	0	1	0	0	0	0	111
13:30	1	80	20	2	3	1	0	0	0	0	0	0	0	107
13:45	0	76	20	0	4	0	0	1	0	0	0	0	0	101
	2	305	94	3	14	4	0	1	2	0	0	0	0	425
14:00	0	63	19	2	5	0	0	0	1	0	0	0	0	90
14:15	0	59	24	1	5	0	0	1	0	0	0	0	0	90
14:30	0	74	20	0	1	0	0	1	0	0	0	0	0	96
14:45	0	75	24	0	4	1	0	0	2	0	0	0	0	106
	0	271	87	3	15	1	0	2	3	0	0	0	0	382
15:00	0	80	20	1	2	0	0	0	0	0	0	0	0	103
15:15	0	97	20	0	7	0	0	0	1	0	0	0	0	125
15:30	1	84	24	0	6	0	0	0	0	0	0	0	0	115
15:45	0	89	30	0	4	0	0	0	0	0	0	0	0	123
	1	350	94	1	19	0	0	0	1	0	0	0	0	466 465
16:00	0	82	30	0	1	0	0	0	0	0	0	0	0	113
16:15	0	76	21	0	2	0	0	0	0	0	0	0	0	99
16:30	1	76	15	0	2	0	0	0	0	0	0	0	0	94
16:45	4	113	27	0	2	0	0	0	0	0	0	0	0	146
	5	347	93	0	7	0	0	0	0	0	0	0	0	452
17:00	0	87	17	0	4	0	0	0	0	0	0	0	0	108
17:15	0	91	15	0	0	0	0	0	0	0	0	0	0	106
17:30	1	87	21	0	1	0	0	0	0	0	0	0	0	110
17:45	0	88	18	0	3	0	0	1	1	0	0	0	0	111
	1	353	71	0	8	0	0	1	1	0	0	0	0	435
18:00	0	92	14	0	0	0	0	0	1	0	0	0	0	107
18:15	1	84	25	0	0	0	0	0	0	0	0	0	0	110
18:30	0	67	17	1	2	0	0	1	1	0	0	0	0	89
18:45	0	72	12	0	0	0	0	0	0	0	0	0	0	84
	1	315	68	1	2	0	0	1	2	0	0	0	0	390
19:00	1	69	15	0	2	0	0	0	0	0	0	0	0	87
19:15	0	57	13	0	1	0	0	0	0	0	0	0	0	71
19:30	0	59	16	0	0	0	0	0	1	0	0	0	0	76
19:45	1	59	17	0	1	0	0	0	0	0	0	0	0	78
	2	244	61	0	4	0	0	0	1	0	0	0	0	312
20:00	0	49	24	0	0	0	0	0	0	0	0	0	0	73
20:15	0	49	17	0	0	0	0	0	0	0	0	0	0	66
20:30	0	56	9	0	2	0	0	0	0	0	0	0	0	67
20:45	0	49	9	0	7	0	0	0	0	0	0	0	0	65
	0	203	59	0	9	0	0	0	0	0	0	0	0	271
21:00	0	41	9	0	1	0	0	0	0	0	0	0	0	51
21:15	0	43	7	0	0	1	0	0	0	0	0	0	0	51
21:30	0	39	9	0	0	0	0	0	0	0	0	0	0	48
21:45	1	31	4	0	0	0	0	0	0	0	0	0	0	36
	1	154	29	0	1	1	0	0	0	0	0	0	0	186
22:00	0	32	8	1	0	0	0	0	0	0	0	0	0	41
22:15	0	20	5	0	0	0	0	0	0	0	0	0	0	25
22:30	0	17	3	0	1	0	0	0	0	0	0	0	0	21
22:45	0	16	6	0	0	0	0	0	0	0	0	0	0	22
	0	85	22	1	1	0	0	0	0	0	0	0	0	109
23:00	0	19	6	0	0	0	0	0	0	0	0	0	0	25
23:15	0	15	5	0	0	0	0	0	0	0	0	0	0	20
23:30	0	12	4	1	0	0	0	0	0	0	0	0	0	17
23:45	0	11	2	0	0	0	0	0	0	0	0	0	0	13
	0	57	17	1	0	0	0	0	0	0	0	0	0	75
Total	15	2996	784	11	101	9	0	8	11	0	0	0	0	3935
Percent	0.4%	76.1%	19.9%	0.3%	2.6%	0.2%	0.0%	0.2%	0.3%	0.0%	0.0%	0.0%	0.0%	
Grand Total	25	4458	1246	29	178	17	0	13	27	0	0	0	0	5993
Percent	0.4%	74.4%	20.8%	0.5%	3.0%	0.3%	0.0%	0.2%	0.5%	0.0%	0.0%	0.0%	0.0%	

Transportation Studies, Inc.
2680 Walnut Avenue, Suite C
Tustin, CA. 92780

Location: FOURTH STREET
Segment: E/O VINEYARD AVENUE

A0906062W
Site Code: ONTARIO

STBOUND1, WESTBOUND2

Start Time	Bikes	Cars & Trailers	2 Axle Long	Buses	2 Axle 6 Tire	3 Axle Single	4 Axle Single	<5 Axl Double	5 Axle Double	>6 Axl Double	<6 Axl Multi	6 Axle Multi	>6 Axl Multi	Total
06/02/09	0	11	2	0	0	0	0	0	0	0	0	0	0	13
00:15	1	12	1	0	1	0	0	0	0	0	0	0	0	15
00:30	0	7	2	0	1	0	0	0	0	0	0	0	0	10
00:45	0	11	1	0	1	0	0	0	0	0	0	0	0	13
	1	41	6	0	3	0	0	0	0	0	0	0	0	51
01:00	0	10	2	0	0	0	0	0	0	0	0	0	0	12
01:15	0	5	1	0	0	0	0	0	0	0	0	0	0	6
01:30	0	6	1	0	0	0	0	0	0	0	0	0	0	7
01:45	0	5	0	0	0	0	0	0	0	0	0	0	0	5
	0	26	4	0	0	0	0	0	0	0	0	0	0	30
02:00	0	5	0	0	0	0	0	0	0	0	0	0	0	5
02:15	0	3	2	0	0	0	0	0	0	0	0	0	0	5
02:30	0	8	1	0	0	0	0	0	0	0	0	0	0	9
02:45	0	11	1	0	1	0	0	0	0	0	0	0	0	13
	0	27	4	0	1	0	0	0	0	0	0	0	0	32
03:00	0	13	2	0	0	0	0	0	0	0	0	0	0	15
03:15	0	7	3	0	0	0	0	0	0	0	0	0	0	10
03:30	0	3	3	0	0	0	0	0	0	0	0	0	0	6
03:45	0	11	2	0	0	0	0	0	1	0	0	0	0	14
	0	34	10	0	0	0	0	0	1	0	0	0	0	45
04:00	0	13	4	0	0	0	0	0	0	0	0	0	0	17
04:15	0	10	1	0	0	0	0	0	0	0	0	0	0	11
04:30	0	6	5	0	1	0	0	0	1	0	0	0	0	13
04:45	0	12	2	1	3	0	0	0	0	0	0	0	0	18
	0	41	12	1	4	0	0	0	1	0	0	0	0	59
05:00	0	17	10	0	0	0	0	0	0	0	0	0	0	27
05:15	1	20	9	1	3	0	0	0	1	0	0	0	0	35
05:30	0	22	10	0	1	0	0	0	0	0	0	0	0	33
05:45	0	28	10	0	1	1	0	0	0	0	0	0	0	40
	1	87	39	1	5	1	0	0	1	0	0	0	0	135
06:00	0	37	14	0	4	2	0	0	0	0	0	0	0	57
06:15	0	52	14	0	3	0	0	1	0	0	0	0	0	70
06:30	1	65	16	0	6	0	0	1	1	0	0	0	0	90
06:45	0	54	8	1	1	0	0	0	0	0	0	0	0	64
	1	208	52	1	14	2	0	2	1	0	0	0	0	281
07:00	0	82	23	0	2	0	0	0	1	0	0	0	0	108
07:15	1	99	20	0	8	0	0	0	0	0	1	0	0	129
07:30	0	74	25	0	1	0	0	0	1	0	0	0	0	101
07:45	0	68	22	0	2	0	0	1	0	0	0	0	0	93
	1	323	90	0	13	0	0	1	2	0	1	0	0	431
08:00	0	83	17	0	7	0	0	0	1	0	0	0	0	108
08:15	0	72	15	0	5	0	0	0	0	0	0	0	0	92
08:30	0	80	27	0	7	0	0	1	0	0	0	0	0	115
08:45	0	67	23	0	2	1	0	1	0	0	0	0	0	94
	0	302	82	0	21	1	0	2	1	0	0	0	0	409
09:00	0	70	16	1	2	1	0	1	0	0	0	0	0	91
09:15	1	65	19	0	5	1	0	1	2	0	0	0	0	94
09:30	0	56	17	2	2	0	0	0	0	0	0	0	0	77
09:45	0	78	18	2	5	1	0	1	1	0	0	0	0	106
	1	269	70	5	14	3	0	3	3	0	0	0	0	368
10:00	0	50	19	0	2	1	0	0	0	0	0	0	0	72
10:15	0	75	13	0	9	0	0	0	0	0	0	0	0	97
10:30	0	67	23	0	2	0	0	0	1	0	0	0	0	93
10:45	1	66	14	0	4	0	0	0	1	0	0	0	0	86
	1	258	69	0	17	1	0	0	2	0	0	0	0	348
11:00	0	80	26	0	5	0	0	1	1	0	0	0	0	113
11:15	0	77	18	0	5	0	0	0	0	0	0	0	0	100
11:30	0	97	24	1	4	0	0	0	0	0	0	0	0	126
11:45	0	91	25	1	4	1	0	0	0	0	0	0	0	122
	0	345	93	2	18	1	0	1	1	0	0	0	0	461 ✓
Total	6	1961	531	10	110	9	0	9	13	0	1	0	0	2650
Percent	0.2%	74.0%	20.0%	0.4%	4.2%	0.3%	0.0%	0.3%	0.5%	0.0%	0.0%	0.0%	0.0%	4%

Transportation Studies, Inc.
2680 Walnut Avenue, Suite C
Tustin, CA. 92780

Location: FOURTH STREET
Segment: E/O VINEYARD AVENUE

A0906062W
Site Code: ONTARIO

'STBOUND1, WESTBOUND2

Start Time	Bikes	Cars & Trailers	2 Axle Long	Buses	2 Axle 6 Tire	3 Axle Single	4 Axle Single	<5 Axl Double	5 Axle Double	>6 Axl Double	<6 Axl Multi	6 Axle Multi	>6 Axl Multi	Total
12 PM	0	107	31	1	3	0	0	0	0	0	0	0	0	142
12:15	1	83	25	0	5	0	0	0	0	0	0	0	0	114
12:30	0	90	19	0	7	0	0	0	1	0	0	0	0	117
12:45	0	88	19	0	8	1	0	2	0	0	0	0	0	118
	1	368	94	1	23	1	0	2	1	0	0	0	0	491
13:00	0	106	17	0	8	0	0	1	0	0	0	0	0	132
13:15	0	87	24	1	3	1	0	0	1	0	0	0	0	117
13:30	0	74	30	0	2	0	0	0	0	0	0	0	0	106
13:45	0	107	27	0	4	1	0	0	1	0	0	0	0	140
	0	374	98	1	17	2	0	1	2	0	0	0	0	495
14:00	0	96	38	1	5	0	0	1	0	0	0	0	0	141
14:15	0	75	22	2	7	0	0	1	0	0	0	0	0	107
14:30	0	106	32	0	6	1	0	0	0	0	0	0	0	145
14:45	0	104	26	2	6	0	0	0	0	0	0	0	0	138
	0	381	118	5	24	1	0	2	0	0	0	0	0	531
15:00	0	91	29	0	8	0	0	0	0	0	0	0	0	128
15:15	0	103	30	0	2	0	0	1	0	0	0	0	0	136
15:30	1	131	28	0	3	0	0	0	0	0	0	0	0	163
15:45	1	102	25	1	2	1	0	1	0	0	0	0	0	133
	2	427	112	1	15	1	0	2	0	0	0	0	0	560
16:00	0	121	30	0	6	0	0	0	0	0	0	0	0	157
16:15	2	136	26	0	2	2	0	0	1	0	0	0	0	169
16:30	0	132	23	0	2	0	0	1	0	0	0	0	0	158
16:45	0	101	29	0	3	0	0	1	0	0	0	0	0	134
	2	490	108	0	13	2	0	2	1	0	0	0	0	618 ✓ 616
17:00	1	136	22	0	5	0	0	1	0	0	0	0	0	165
17:15	0	114	26	0	1	0	0	1	0	0	0	0	0	142
17:30	0	123	31	0	1	0	0	0	0	0	0	0	0	155
17:45	0	102	24	0	2	0	0	0	0	0	0	0	0	128
	1	475	103	0	9	0	0	2	0	0	0	0	0	590
18:00	0	118	25	0	3	0	0	1	0	0	0	0	0	147
18:15	0	75	22	0	1	0	0	0	0	0	0	0	0	98
18:30	0	84	21	0	3	0	0	0	0	0	0	0	0	108
18:45	0	74	12	0	1	0	0	0	0	0	0	0	0	87
	0	351	80	0	8	0	0	1	0	0	0	0	0	440
19:00	1	78	12	0	1	0	0	0	0	0	0	0	0	92
19:15	0	60	11	0	1	0	0	0	0	0	0	0	0	72
19:30	0	69	15	0	1	0	0	0	0	0	0	0	0	85
19:45	0	59	8	0	0	0	0	0	0	0	0	0	0	67
	1	266	46	0	3	0	0	0	0	0	0	0	0	316
20:00	1	71	13	0	4	1	0	0	1	0	0	0	0	91
20:15	0	59	12	0	2	0	0	0	0	0	0	0	0	73
20:30	0	67	7	0	3	0	0	0	0	0	0	0	0	77
20:45	0	39	8	0	1	0	0	0	0	0	0	0	0	48
	1	236	40	0	10	1	0	0	1	0	0	0	0	289
21:00	0	48	15	1	1	0	0	0	0	0	0	0	0	65
21:15	0	36	10	0	0	1	0	0	0	0	0	0	0	47
21:30	0	28	12	0	2	0	0	0	0	0	0	0	0	42
21:45	0	43	6	0	0	0	0	0	0	0	0	0	0	49
	0	155	43	1	3	1	0	0	0	0	0	0	0	203
22:00	3	49	3	1	0	0	0	0	0	0	0	0	0	56
22:15	0	28	2	0	0	0	0	0	0	0	0	0	0	30
22:30	0	17	6	0	0	0	0	0	0	0	0	0	0	23
22:45	0	19	2	0	0	0	0	0	0	0	0	0	0	21
	3	113	13	1	0	0	0	0	0	0	0	0	0	130
23:00	0	13	3	0	0	0	0	0	0	0	0	0	0	16
23:15	0	13	1	0	0	0	0	0	0	0	0	0	0	14
23:30	0	16	3	0	0	0	0	0	0	0	0	0	0	19
23:45	0	23	2	1	0	0	0	0	0	0	0	0	0	26
	0	65	9	1	0	0	0	0	0	0	0	0	0	75
Total	11	3701	864	11	125	9	0	12	5	0	0	0	0	4738
Percent	0.2%	78.1%	18.2%	0.2%	2.6%	0.2%	0.0%	0.3%	0.1%	0.0%	0.0%	0.0%	0.0%	
Grand Total	17	5662	1395	21	235	18	0	21	18	0	1	0	0	7388
Percent	0.2%	76.6%	18.9%	0.3%	3.2%	0.2%	0.0%	0.3%	0.2%	0.0%	0.0%	0.0%	0.0%	