41 Corporate Park, Suite 300 Irvine, CA 92606 949.660.1994 main 949.660.1911 fax www.urbanxroads.com

July 2, 2009

Mr. Jon Gillespie
CITY OF RANCHO CUCAMONGA
10500 Civic Center Drive
Rancho Cucamonga, CA 91730

Subject: **2009 SANBAG CMP Monitoring Existing Conditions Traffic Analysis – City of Rancho Cucamonga**

Dear Mr. Gillespie:

INTRODUCTION

Urban Crossroads, Inc. is pleased to submit this letter report documenting the Existing (2009) traffic counts and level of service calculations at twenty-one (21) intersections in the City of Rancho Cucamonga. The locations analyzed are shown on Exhibit A. The data presented in this letter report will be utilized to update the San Bernardino Associated Governments' (SANBAG) Congestion Management Program (CMP) monitoring database. The analysis methodology is followed by presentation of the analysis results.

METHODOLOGY

The analysis has been prepared in accordance with the procedures documented in the traffic study guidelines from the 2005 San Bernardino County CMP document. The current technical guide to the evaluation of traffic operations is the 2000 Highway Capacity Manual (HCM) (Transportation Research Board Special Report 209). The HCM defines level of service as a qualitative measure which describes operational conditions within a traffic stream, generally in terms of such factors as speed and travel time, freedom to maneuver, traffic interruptions, comfort and convenience, and safety. The criteria used to evaluate Level of Service (LOS) conditions vary based on the type of roadway and whether the traffic flow is considered interrupted or uninterrupted.

All of the CMP monitoring locations in the City of Rancho Cucamonga are signalized intersections. For signalized intersections, average total delay per vehicle for the overall intersection is used to determine

level of service. Levels of service at signalized study intersections have been evaluated using an HCM intersection analysis program (TRAFFIX, version 8.0). The levels of service are defined in terms of average delay for the intersection analysis methodology as follows:

LEVEL OF SERVICE	AVERAGE TOTAL DELAY PER VEHICLE (SECONDS)	
	SIGNALIZED	UNSIGNALIZED
A	0 to 10.00	0 to 10.00
B	10.01 to 20.00	10.01 to 15.00
C	20.01 to 35.00	15.01 to 25.00
D	35.01 to 55.00	25.01 to 35.00
E	55.01 to 80.00	35.01 to 50.00
F	80.01 and up	50.01 and up

Per the CMP, signalized intersections are considered deficient (LOS "F") if the overall intersection critical volume to capacity (V/C) ratio equals or exceeds 1.0, even if the level of service defined by the delay value is below the defined LOS standard. The V/C ratio is defined as the critical volumes divided by the intersection capacity. A V/C ratio greater than 1.0 implies an infinite queue.

The LOS analysis for signalized intersections has been performed using optimized signal timing. This analysis has included an assumed lost time of two seconds per phase. Signal timing optimization has considered pedestrian safety and signal coordination requirements. Appropriate time allowance for pedestrians has also been considered in the signalized intersection analysis. The following formula has been used to calculate the pedestrian minimum times for all HCM runs:

[(Curb to Curb distance) / (4 feet/second)] + 5 seconds

Saturation flow rates of 1,800 vehicles per hour of green (vphg) for through and right turn lanes, 1,700 vehicles for single left turn lanes, 1,600 vehicles per lane for dual left turn lanes and 1,500 vehicles per lane for triple left turn lanes have been assumed for all capacity analysis. A peak hour factor of 0.95 has been used in the analysis. These are the default values recommended by the CMP guidelines for existing conditions analysis.

EXISTING CONDITIONS TRAFFIC VOLUME AND GEOMETRIC DATA

Peak period traffic volume data has been collected at the 21 intersections previously presented on Exhibit A. The AM peak hour traffic volumes were determined by counting the two hour period between 7 – 9 AM in the morning. Similarly, the PM peak hour traffic volumes were identified by counting the two hour period from 4 - 6 PM in the evening. The count includes the vehicle classification as shown below per the requirements of the San Bernardino CMP.

- passenger cars (PCE factor = 1.0)
- buses/recreational vehicles (PCE factor = 1.5)
- 3 axles (PCE factor = 2.0)
- 4 or more axles (PCE factor = 3.0)

The overall existing count volumes illustrated on the exhibits and used for the analysis are calculated passenger car equivalent (PCE) volumes.

Daily traffic count data has also been collected at 7 locations, which are also shown on Exhibit A. Vehicle classification data has been collected for both the daily (24-hour) roadway segment and AM and PM peak period intersection turning movement counts. Attachment "A" contains the daily traffic volume data and Attachment "B" includes all of the peak period intersection turning movement count data.

Table 1 summarizes the daily traffic volume data, including the percentage of each type of vehicle. The daily vehicle volumes range between 20,190 vehicles per day (Base Line Road between Etiwanda Avenue and Shelby Place) and 58,436 vehicles per day (Foothill Boulevard between Day Creek Boulevard and the I-15 Freeway). The majority (between 73 and 76%) of the vehicular traffic is cars, with most of the

remainder (22-25%) consisting of larger 2-axle vehicles. Only 1-2% of the vehicles at any of the locations counted consist of vehicles with more than 2 axles.

The AM and PM peak period data has been further analyzed to determine the AM and PM peak hour volumes. The data has also been converted from raw vehicle counts to passenger car equivalent (PCE) volumes using the PCE factors described previously. The final AM and PM peak hour PCE turning movement volumes are shown on Exhibit B and Exhibit C, respectively.

Urban Crossroads, Inc. staff also performed field reconnaissance to obtain existing intersection geometric data and signal phasing information at each of the 21 intersection analysis locations. This data has been incorporated into the intersection operations analysis. The geometric data field notes are included as Attachment "C" of this letter report. The notes consist of intersection drawings depicting the number of lanes, curb-to-curb widths (for use in calculating minimum pedestrian crossing times), crosswalk locations, speed limits, and other data pertinent to the operations analysis (such as signal phasing). Per the CMP guidelines, a de facto right turn lane has been assumed (included in the analysis) wherever the outside (shoulder) through lane is 20 feet wide or more. The intersection geometric data is summarized on Exhibit D.

OPERATIONS ANALYSIS RESULTS

Existing peak hour traffic operations have been evaluated for both the AM and PM peak hours of traffic throughout the study area. The results of this analysis are summarized in Table 2, along with the existing intersection geometrics and control devices at each analysis location. As indicated in Table 2, the study area intersections currently operate at acceptable levels of service during the peak hours except the following intersection:

Etiwanda Avenue (NS) at:

- Arrow Route (EW)

The previous CMP monitoring cycle indicated that this intersection experienced acceptable traffic operations. Review of the previous analysis indicates that the northbound approach to this intersection

was analyzed including two through lanes. The current field reconnaissance, as well as review of aerial photography, indicates that only a single northbound through lane exists at this location.

The previous CMP monitoring cycle analysis also indicated that the intersection of Vineyard Avenue (NS) at Foothill Boulevard (EW) was experiencing deficient traffic operations. The underlying analysis has been reviewed and the current geometric configuration at this intersection includes an additional (2nd) northbound through lane at this location, resulting in the improvement in peak hour traffic operations.

All other analysis location results have also been reviewed and appear reasonable. There are instances where traffic volumes have decreased over time. This is attributed to the current economic conditions and appears reasonable. A number of geometric differences are also evident in comparison to the previous analysis. Many of the differences are attributable to de facto right turn lanes, and all of the differences have been confirmed based upon review of the field notes and aerial photography. Even with the differences, the resulting levels of service are generally within one LOS of the previous monitoring report results.

CLOSING

Urban Crossroads, Inc. is pleased to provide this CMP monitoring analysis report for your use. If you have any questions or concerns regarding this analysis, please give us a call at (949) 660-1994.

Sincerely,

URBAN CROSSROADS, INC.

Carleton Waters, P.E.
Principal

Domingo Maclang, P.E.
Senior Engineer

CW:DM:rd
JN:06786-02 Report

Attachments

EXHIBIT A

STUDY AREA INTERSECTIONS

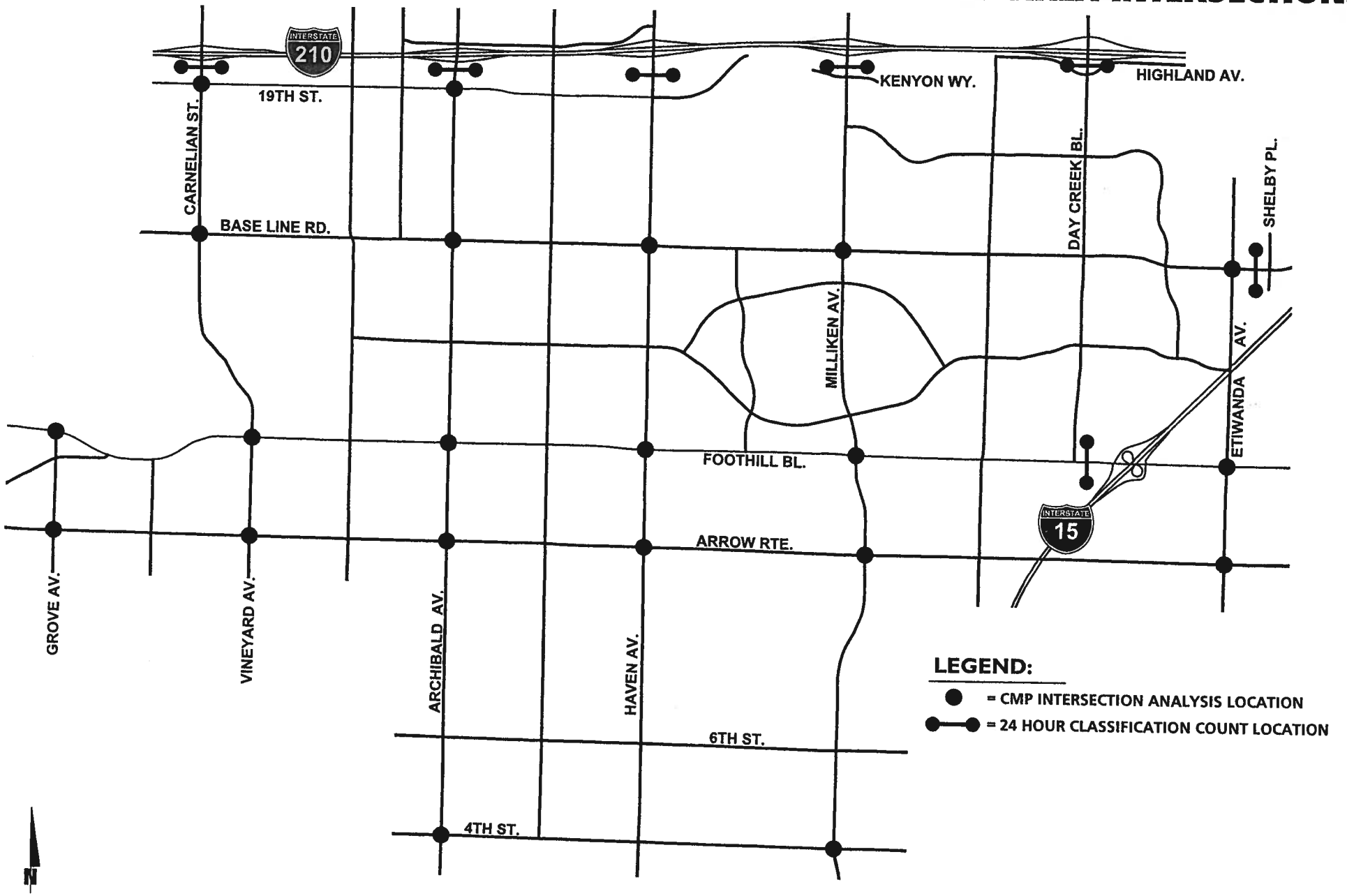

EXHIBIT B

EXISTING AM PEAK HOUR INTERSECTION VOLUMES

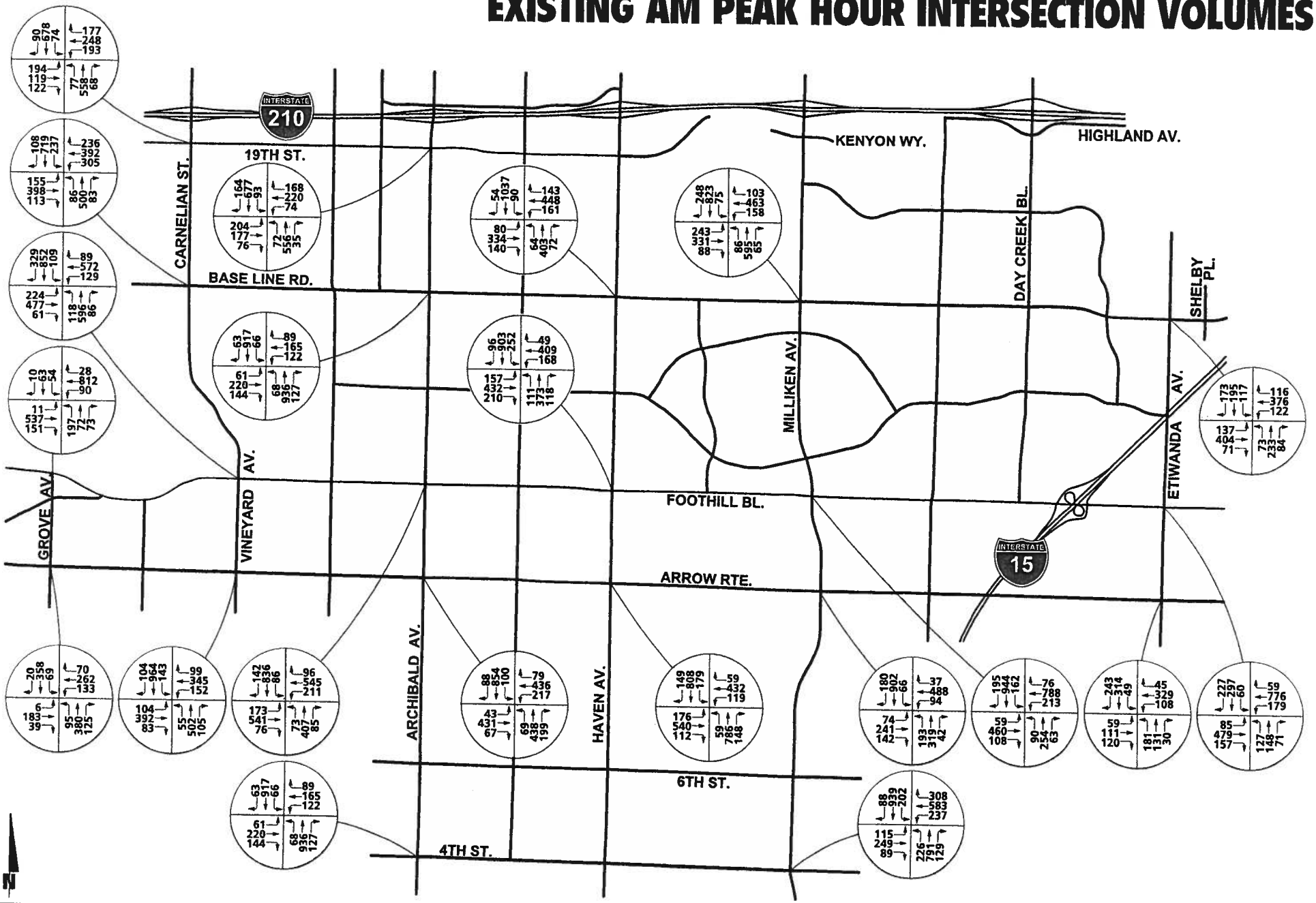

2009 SANBAG CMP Monitoring - Existing Conditions Traffic Analysis
City of Rancho Cucamonga , CA (JN - 06786:300.dwg)

URBAN CROSSROADS

EXHIBIT C

EXISTING PM PEAK HOUR INTERSECTION VOLUMES

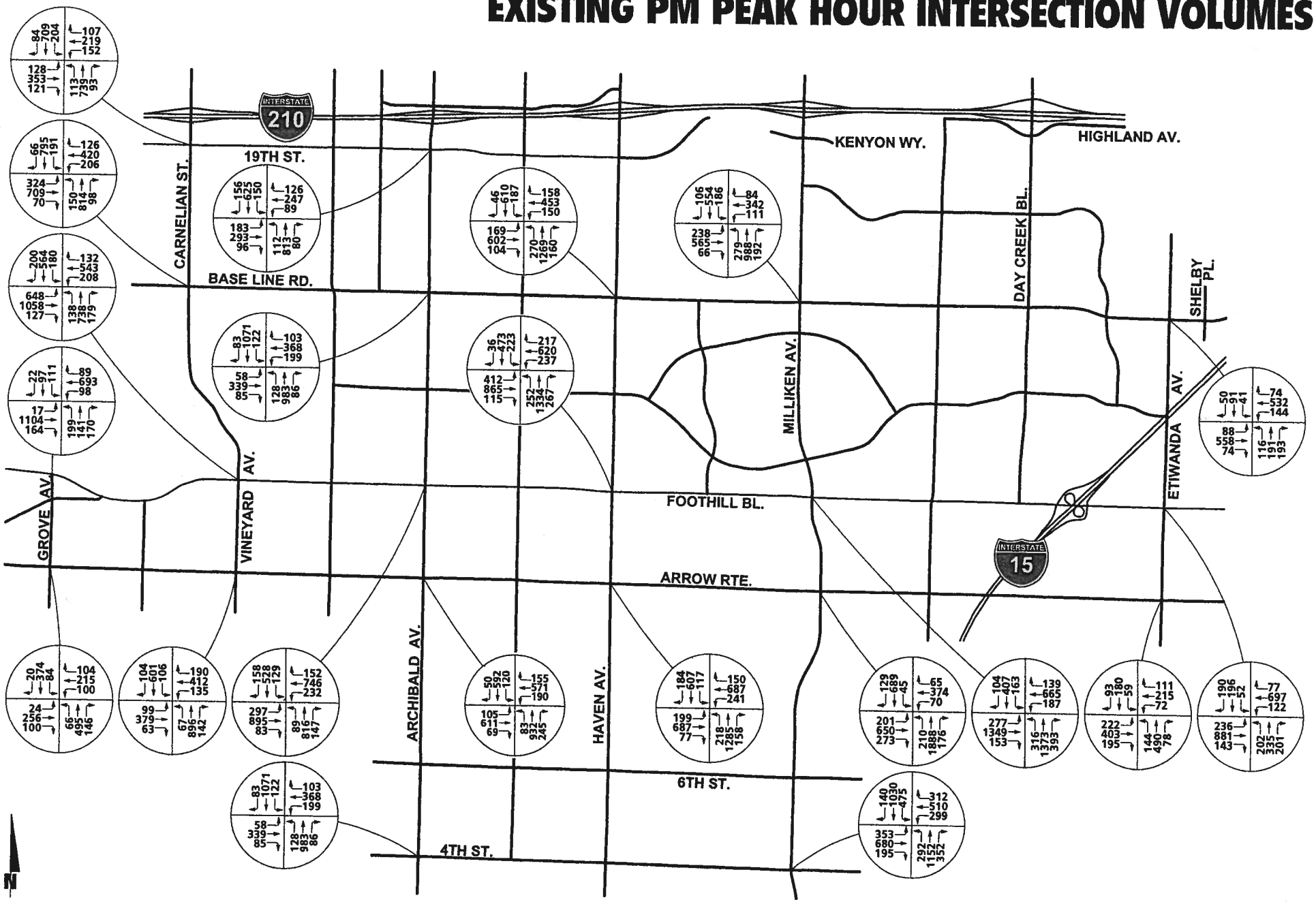

2009 SANBAG CMP Monitoring - Existing Conditions Traffic Analysis
City of Rancho Cucamonga , CA (JN - 06786:301.dwg)

URBAN CROSSROADS

EXHIBIT D

INTERSECTION GEOMETRY DATA

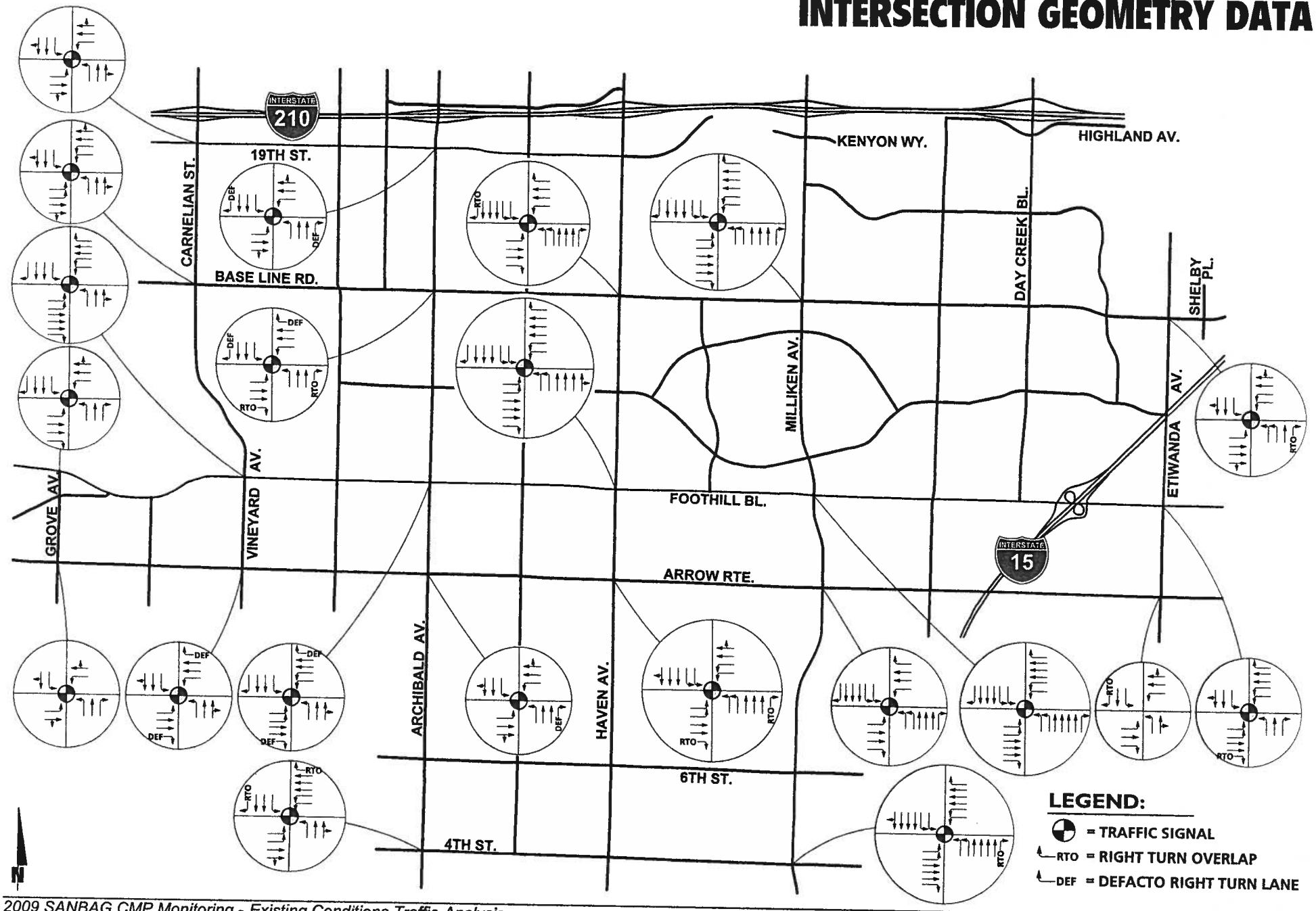

2009 SANBAG CMP Monitoring - Existing Conditions Traffic Analysis
City of Rancho Cucamonga , CA (JN - 06786:003.dwg)

URBAN CROSSROADS

Table 1
(1 of 1)

Existing 2009 Conditions
Daily Traffic Volume Summary

Location		Volumes by Type						% of Vehicles by Type[1]				
Roadway	Segment Limits	Bikes	Cars	2-Axle Long	3-Axle	4+-Axle	**Total Vehicles**	Cars	2-Axle Long	3-Axle	4+-Axle	**Total Vehicles**
Carnelian St.	19th St. / SR-210 EB Ramps	144	19,062	6,683	37	449	26,231	73%	25%	0%	2%	100%
Archibald Av.	19th St. / SR-210 EB Ramps	142	19,004	6,302	42	416	25,764	74%	24%	0%	2%	100%
Haven Av.	19th St. / SR-210 EB Ramps	113	24,097	8,017	28	326	32,468	74%	25%	0%	1%	100%
Milliken Av.	Kenyon Wy. / SR-210 EB Ramp	117	23,246	6,698	48	530	30,522	76%	22%	0%	2%	100%
Day Creek Bl. [2]	Highland Av. / SR-210 EB Ramps	N/A	N/A	N/A	N/A	N/A	29,979	N/A	N/A	N/A	N/A	100%
Foothill Bl.	Day Creek Bl. / I-15	327	43,901	13,123	126	1,286	58,436	75%	22%	0%	2%	99%
Base Line Rd.	Etiwanda Av. / Shelby Place	68	15,149	4,919	16	106	20,190	75%	24%	0%	1%	100%

[1] Percentages may not add to 100 due to rounding

[2] No classification data available due to limited space between intersections

Table 2
(1 of 2)

Existing 2009 Conditions
Intersection Operations Analysis Summary

Intersection		Traffic	Intersection Approach Lanes[1]												Delay[2] (Sec.)		Level of Service	
			Northbound			Southbound			Eastbound			Westbound						
No.	Name	Control[3]	L	T	R	L	T	R	L	T	R	L	T	R	AM	PM	AM	PM
1	Grove Av. (NS) at: • Foothill Bl. (EW)	TS	1	1	1	1	2	1	1	2	1	1	2	0	12.5	14.4	B	B
2	Grove Av. (NS) at: • Arrow Rte. (EW)	TS	1	1	1	1	1	0	1	1	0	1	1	0	10.3	10.7	B	B
3	Carnelian St. (NS) at: • 19th St. (EW)	TS	1	2	0	1	2	0	1	2	0	1	2	0	30.0	30.1	C	C
4	Carnelian St. (NS) at: • Base Line Rd. (EW)	TS	1	2	0	1	2	0	2	2	0	2	2	0	28.7	31.9	C	C
5	Vineyard Av. (NS) at: • Foothill Bl. (EW)	TS	1	2	0	1	2	1	2	3	1	2	2	1	34.2	43.6	C	D
6	Vineyard Av. (NS) at: • Arrow Rte. (EW)	TS	1	2	0	1	2	0	1	2	d	1	2	d	28.7	27.3	C	C
7	Archibald Av. (NS) at: • 19th St. (EW)	TS	1	2	d	1	2	d	1	2	0	1	2	0	26.9	28.1	C	C
8	Archibald Av. (NS) at: • Base Line Rd. (EW)	TS	1	2	1>	1	2	d	1	2	1>	1	2	d	26.5	34.0	C	C
9	Archibald Av. (NS) at: • Foothill Bl. (EW)	TS	1	2	0	1	2	1	2	2	d	2	2	d	26.8	32.4	C	C
10	Archibald Av. (NS) at: • Arrow Rte. (EW)	TS	1	2	d	1	2	0	1	2	0	1	2	0	31.1	29.5	C	C
11	Archibald Av. (NS) at: • 4th St. (EW)	TS	1	2	0	1	2	1>	2	2	0	2	3	1>	29.4	32.7	C	C
12	Haven Av. (NS) at: • Base Line Rd. (EW)	TS	2	3	1	2	3	1>	1	2	1	1	2	1	28.9	35.0	C	C
13	Haven Av. (NS) at: • Foothill Bl. (EW)	TS	2	4	0	2	3	1	2	3	1	2	3	1	31.7	38.5	C	D
14	Haven Av. (NS) at: • Arrow Rte. (EW)	TS	2	3	1>	2	3	0	2	2	1>	2	2	0	27.6	31.3	C	C
15	Milliken Av. (NS) at: • Base Line Rd. (EW)	TS	2	3	1	2	3	1	2	3	1	2	3	1	27.8	31.7	C	C

Table 2
(2 of 2)

Existing 2009 Conditions
Intersection Operations Analysis Summary

Intersection		Traffic	Intersection Approach Lanes[1]												Delay[2] (Sec.)		Level of Service	
			Northbound			Southbound			Eastbound			Westbound						
No.	Name	Control[3]	L	T	R	L	T	R	L	T	R	L	T	R	AM	PM	AM	PM
16	Milliken Av. (NS) at: • Foothill Bl. (EW)	TS	2	4	1	2	3	1	2	3	1	2	3	1	29.9	36.6	C	D
17	Milliken Av. (NS) at: • Arrow Rte. (EW)	TS	2	3	1	2	3	1	1	2	1	1	2	1	32.0	39.5	C	D
18	Milliken Av. (NS) at: • 4th St. (EW)	TS	2	4	1>	2	4	0	2	3	1	2	3	1	37.3	44.0	D	D
19	Etiwanda Av. (NS) at: • Base Line Rd. (EW)	TS	2	1	1>	1	2	0	1	3	0	2	2	0	26.8	25.5	C	C
20	Etiwanda Av. (NS) at: • Foothill Bl. (EW)	TS	1	1	1	1	2	0	2	2	1>	2	2	1	29.5	35.5	C	D
21	Etiwanda Av. (NS) at: • Arrow Rte. (EW)	TS	1	1	0	1	1	1>	1	1	1	1	2	0	39.0	--[4]	D	F

[1] When a right turn is designated, the lane can either be striped or unstriped. To function as a right turn lane there must be sufficient width for right turning vehicles to travel outside the through lanes.

L = Left; T = Through; R = Right; 1! = Left-Thru-Right Lane; 1> = Right Turn Overlap; 1>> = Free-Right Turn Lane

d = De Facto Right Turn Lane

[2] Delay and level of service calculated using the following analysis software: Traffix, Version 8.0 (2008). Per the 2000 Highway Capacity Manual, overall average intersection delay and level of service are shown for intersections with traffic signal or all way stop control. For intersections with cross street stop control, the delay and level of service for worst individual movement (or movements sharing a single lane) are shown.

[3] TS = Traffic Signal

[4] -- = Average Delay >100 or Critical Vol/Cap >1.0; Intersection Unstable; Level of Service "F".

ATTACHMENT A

DAILY TRAFFIC COUNT DATA

This Page Intentionally Left Blank

Table Daily Data
(1 of 1)

Existing 2009 Conditions
Daily Traffic Volume Summary

Location		Volumes by Type														
Roadway	Segment Limits	Bikes	Cars & Trailers	2-Axle Long	Buses	2-Axle 6 Tire	3-Axle Single	4 Axle Single	<5 Axle Double	5 Axle Double	>6 Axle Double	<6 Axle Multi	6 Axle Multi	>6 Axle Multi	Total Vehicles	Total (W/ Bikes)
Carnelian St.	19th St. / SR-210 EB Ramps	144	19,062	5,408	116	1,159	37	3	318	49	58	5	16	0	**26,231**	**26,375**
Archibald Av.	19th St. / SR-210 EB Ramps	142	19,004	5,208	98	996	42	3	299	57	42	2	13	0	**25,764**	**25,906**
Haven Av.	19th St. / SR-210 EB Ramps	113	24,097	6,766	146	1,105	28	8	226	56	26	5	5	0	**32,468**	**32,581**
Milliken Av.	Kenyon Wy. / SR-210 EB Ramp	117	23,246	5,759	113	826	48	44	276	143	45	7	15	0	**30,522**	**30,639**
Day Creek Bl.	Highland Av. / SR-210 EB Ramps	No classification data available due to limited space between intersections													**29,979**	**#VALUE!**
Foothill Bl.	Day Creek Bl. / I-15	327	43,901	10,888	343	1,892	126	11	675	387	171	13	29	0	**58,436**	**58,763**
Base Line Rd.	Etiwanda Av. / Shelby Place	68	15,149	4,267	76	576	16	0	58	26	3	5	0	14	**20,190**	**20,258**

Counts Unlimtied, Inc.
25286 Jaclyn Avenue
Moreno Valley, CA 92507
(951) 485-7934

City of Rancho Cucamonga
Carnelian Street
B/ 19th Street - State Route 210 EB Ramp
24 Hour Directional Classification Count
Northbound

RNCCA19210
Site Code: 0519150
Date Start: 04-Jun-09
Date End: 04-Jun-09

Start Time	Bikes	Cars & Trailers	2 Axle Long	Buses	2 Axle 6 Tire	3 Axle Single	4 Axle Single	<5 Axl Double	5 Axle Double	>6 Axl Double	<6 Axl Multi	6 Axle Multi	>6 Axl Multi	Total
06/04/09	0	68	26	0	3	0	0	0	0	0	0	0	0	97
01:00	0	50	10	0	0	0	0	0	0	0	0	0	0	60
02:00	1	37	8	0	0	0	0	0	0	0	0	0	0	46
03:00	0	45	7	0	6	0	0	1	0	0	0	0	0	59
04:00	1	104	54	0	8	0	0	0	0	0	0	0	0	167
05:00	1	253	98	1	38	0	0	2	1	0	0	0	0	394
06:00	3	391	129	2	26	0	0	5	0	1	0	0	0	557
07:00	4	**632**	162	**6**	34	1	0	**18**	0	1	0	**1**	0	**859**
08:00	**7**	531	**176**	6	**41**	**3**	0	12	2	**2**	0	1	0	781
09:00	4	469	139	2	31	2	0	6	1	0	0	1	0	655
10:00	3	444	142	3	23	2	0	11	2	1	**1**	0	0	632
11:00	1	485	143	5	31	2	0	4	**3**	1	0	0	0	675
12 PM	4	500	177	5	37	0	0	7	2	2	0	0	0	734
13:00	5	551	174	5	42	1	0	16	0	1	0	1	0	796
14:00	4	622	201	**7**	38	**3**	0	14	1	3	0	0	0	893
15:00	1	673	196	5	**48**	2	0	16	1	1	0	0	0	943
16:00	4	707	**209**	5	43	2	0	18	1	6	0	0	0	995
17:00	5	**739**	196	6	48	2	**1**	**24**	**4**	9	0	**2**	0	**1036**
18:00	5	643	160	5	33	1	0	18	2	**11**	0	0	0	878
19:00	**8**	627	171	2	36	0	0	10	0	1	0	0	0	855
20:00	5	510	159	2	27	0	**0**	13	0	0	0	0	0	716
21:00	2	430	102	1	13	0	0	4	1	1	0	0	0	554
22:00	0	260	54	0	7	0	0	1	0	0	0	0	0	322
23:00	1	175	46	0	0	0	0	0	0	0	0	0	0	222
Total	69	9946	2939	68	613	21	1	200	21	41	1	6	0	13926
Percent	0.5%	71.4%	21.1%	0.5%	4.4%	0.2%	0.0%	1.4%	0.2%	0.3%	0.0%	0.0%	0.0%	
AM Peak	08:00	07:00	08:00	07:00	08:00	08:00		07:00	11:00	08:00	10:00	07:00		07:00
Vol.	7	632	176	6	41	3		18	3	2	1	1		859
PM Peak	19:00	17:00	16:00	14:00	15:00	14:00	17:00	17:00	17:00	18:00		17:00		17:00
Vol.	8	739	209	7	48	3	1	24	4	11		2		1036
Grand Total	69	9946	2939	68	613	21	1	200	21	41	1	6	0	13926
Percent	0.5%	71.4%	21.1%	0.5%	4.4%	0.2%	0.0%	1.4%	0.2%	0.3%	0.0%	0.0%	0.0%	

Counts Unlimtied, Inc.
25286 Jaclyn Avenue
Moreno Valley, CA 92507
(951) 485-7934

City of Rancho Cucamonga
Carnelian Street
B/ 19th Street - State Route 210 EB Ramp
24 Hour Directional Classification Count
Westbound

RNCCA19210
Site Code: 0519150
Date Start: 04-Jun-09
Date End: 04-Jun-09

Start Time	Bikes	Cars & Trailers	2 Axle Long	Buses	2 Axle 6 Tire	3 Axle Single	4 Axle Single	<5 Axl Double	5 Axle Double	>6 Axl Double	<6 Axl Multi	6 Axle Multi	>6 Axl Multi	Total
06/04/09	0	93	17	0	5	0	0	0	0	0	0	0	0	115
01:00	1	53	9	0	0	0	0	0	0	0	0	0	0	63
02:00	1	33	10	0	0	0	0	0	0	0	0	0	0	44
03:00	0	36	17	0	1	0	0	0	1	0	0	0	0	55
04:00	0	62	19	0	3	0	0	0	0	0	0	0	0	84
05:00	1	147	51	0	14	0	0	0	0	0	0	0	0	213
06:00	2	292	93	1	25	1	0	2	1	1	0	0	0	418
07:00	**8**	**633**	**160**	**6**	**48**	**3**	0	**12**	2	**2**	0	**1**	0	**875**
08:00	3	551	160	1	33	1	0	9	3	0	0	0	0	761
09:00	1	507	154	2	44	0	0	4	**4**	0	0	0	0	716
10:00	0	392	123	4	38	2	0	12	4	1	**1**	0	0	577
11:00	3	358	96	3	27	1	0	11	3	0	1	1	0	504
12 PM	4	342	106	3	24	**3**	0	7	2	**3**	0	0	0	494
13:00	2	346	107	2	25	1	0	**13**	0	3	**1**	2	0	502
14:00	5	597	168	**6**	46	0	0	13	0	1	0	1	0	837
15:00	8	649	**215**	4	32	1	**1**	2	1	1	0	0	0	914
16:00	9	619	206	6	**47**	1	0	10	0	2	0	1	0	901
17:00	4	706	172	5	35	2	1	9	**3**	3	1	**3**	0	944
18:00	**10**	**753**	176	1	33	0	0	7	1	0	0	0	0	**981**
19:00	6	550	117	0	25	0	0	2	2	0	0	0	0	702
20:00	2	465	111	2	23	0	0	1	1	0	0	0	0	605
21:00	5	464	83	1	11	0	0	4	0	0	0	1	0	569
22:00	0	286	56	1	6	0	0	0	0	0	0	0	0	349
23:00	0	182	43	0	1	0	0	0	0	0	0	0	0	226
Total	75	9116	2469	48	546	16	2	118	28	17	4	10	0	12449
Percent	0.6%	73.2%	19.8%	0.4%	4.4%	0.1%	0.0%	0.9%	0.2%	0.1%	0.0%	0.1%	0.0%	
AM Peak	07:00	07:00	07:00	07:00	07:00	07:00		07:00	09:00	07:00	10:00	07:00		07:00
Vol.	8	633	160	6	48	3		12	4	2	1	1		875
PM Peak	18:00	18:00	15:00	14:00	16:00	12:00	15:00	13:00	17:00	12:00	13:00	17:00		18:00
Vol.	10	753	215	6	47	3	1	13	3	3	1	3		981
Grand Total	75	9116	2469	48	546	16	2	118	28	17	4	10	0	12449
Percent	0.6%	73.2%	19.8%	0.4%	4.4%	0.1%	0.0%	0.9%	0.2%	0.1%	0.0%	0.1%	0.0%	

Counts Unlimtied, Inc.
25286 Jaclyn Avenue
Moreno Valley, CA 92507
(951) 485-7934

City of Rancho Cucamonga
Carnelian Street
B/ 19th Street - State Route 210 EB Ramp
24 Hour Directional Classification Count
Northbound, Westbound

RNCCA19210
Site Code: 0519150
Date Start: 04-Jun-09
Date End: 04-Jun-09

Start Time	Bikes	Cars & Trailers	2 Axle Long	Buses	2 Axle 6 Tire	3 Axle Single	4 Axle Single	<5 Axl Double	5 Axle Double	>6 Axl Double	<6 Axl Multi	6 Axle Multi	>6 Axl Multi	Total
06/04/09	0	161	43	0	8	0	0	0	0	0	0	0	0	212
01:00	1	103	19	0	0	0	0	0	0	0	0	0	0	123
02:00	2	70	18	0	0	0	0	0	0	0	0	0	0	90
03:00	0	81	24	0	7	0	0	1	1	0	0	0	0	114
04:00	1	166	73	0	11	0	0	0	0	0	0	0	0	251
05:00	2	400	149	1	52	0	0	2	1	0	0	0	0	607
06:00	5	683	222	3	51	1	0	7	1	2	0	0	0	975
07:00	**12**	**1265**	322	**12**	**82**	**4**	0	**30**	2	**3**	0	**2**	0	**1734**
08:00	10	1082	**336**	7	74	4	0	21	5	2	0	1	0	1542
09:00	5	976	293	4	75	2	0	10	5	0	0	1	0	1371
10:00	3	836	265	7	61	4	0	23	**6**	2	**2**	0	0	1209
11:00	4	843	239	8	58	3	0	15	6	1	1	1	0	1179
12 PM	8	842	283	8	61	3	0	14	4	5	0	0	0	1228
13:00	7	897	281	7	67	2	0	29	0	4	**1**	3	0	1298
14:00	9	1219	369	**13**	84	3	0	27	1	4	0	1	0	1730
15:00	9	1322	411	9	80	3	1	18	2	2	0	0	0	1857
16:00	13	1326	**415**	11	**90**	3	0	28	1	8	0	1	0	1896
17:00	9	**1445**	368	11	83	**4**	**2**	**33**	**7**	**12**	1	**5**	0	**1980**
18:00	**15**	1396	336	6	66	1	0	25	3	11	0	0	0	1859
19:00	14	1177	288	2	61	0	0	12	2	1	0	0	0	1557
20:00	7	975	270	4	50	0	0	14	1	0	0	0	0	1321
21:00	7	894	185	2	24	0	0	8	1	1	0	1	0	1123
22:00	0	546	110	1	13	0	0	1	0	0	0	0	0	671
23:00	1	357	89	0	1	0	0	0	0	0	0	0	0	448
Total	144	19062	5408	116	1159	37	3	318	49	58	5	16	0	26375
Percent	0.5%	72.3%	20.5%	0.4%	4.4%	0.1%	0.0%	1.2%	0.2%	0.2%	0.0%	0.1%	0.0%	
AM Peak	07:00	07:00	08:00	07:00	07:00	07:00		07:00	10:00	07:00	10:00	07:00		07:00
Vol.	12	1265	336	12	82	4		30	6	3	2	2		1734
PM Peak	18:00	17:00	16:00	14:00	16:00	17:00	17:00	17:00	17:00	17:00	13:00	17:00		17:00
Vol.	15	1445	415	13	90	4	2	33	7	12	1	5		1980
Grand Total	144	19062	5408	116	1159	37	3	318	49	58	5	16	0	26375
Percent	0.5%	72.3%	20.5%	0.4%	4.4%	0.1%	0.0%	1.2%	0.2%	0.2%	0.0%	0.1%	0.0%	

Counts Unlimtied, Inc.
25286 Jaclyn Avenue
Moreno Valley, CA 92507
(951) 485-7934

City of Rancho Cucamonga
Archibald Avenue
B/ 19th Street - State Route 210 EB Ramp
24 Hour Directional Classification Count
Northbound

RNCAR19210
Site Code: 0519150
Date Start: 04-Jun-09
Date End: 04-Jun-09

Start Time	Bikes	Cars & Trailers	2 Axle Long	Buses	2 Axle 6 Tire	3 Axle Single	4 Axle Single	<5 Axl Double	5 Axle Double	>6 Axl Double	<6 Axl Multi	6 Axle Multi	>6 Axl Multi	Total
06/04/09	0	53	24	0	0	0	0	0	0	0	0	0	0	77
01:00	0	46	8	0	1	0	0	0	0	0	0	0	0	55
02:00	1	37	8	0	2	0	0	0	0	0	0	0	0	48
03:00	0	27	6	1	2	0	0	1	0	0	0	0	0	37
04:00	1	119	49	1	9	0	0	0	1	0	0	0	0	180
05:00	3	244	106	1	28	0	0	3	1	0	0	0	0	386
06:00	5	400	144	0	31	**4**	0	7	2	0	0	0	0	593
07:00	**9**	**643**	**196**	**7**	**37**	2	0	**15**	**5**	1	0	0	0	**915**
08:00	0	528	156	2	20	0	0	7	1	0	0	0	0	714
09:00	7	467	121	1	25	1	0	9	1	**4**	0	0	0	636
10:00	3	420	128	1	17	2	0	5	3	1	0	0	0	580
11:00	2	476	126	2	30	2	0	12	1	0	0	**1**	0	652
12 PM	1	482	137	1	24	2	**1**	10	0	0	0	0	0	658
13:00	5	481	152	**8**	27	2	0	15	2	2	0	2	0	696
14:00	4	579	189	7	40	1	0	27	1	3	**1**	0	0	852
15:00	6	637	**207**	**4**	41	2	0	**28**	3	4	0	1	0	933
16:00	**8**	688	178	4	41	2	1	18	2	**7**	0	2	0	951
17:00	3	**709**	198	5	**46**	**5**	0	27	**4**	7	1	1	0	**1006**
18:00	4	653	193	6	37	0	0	14	0	4	0	**4**	0	915
19:00	6	530	152	2	25	0	0	6	2	2	0	1	0	726
20:00	4	476	108	8	15	0	0	5	2	0	0	0	0	618
21:00	1	424	101	2	15	0	0	6	3	1	0	1	0	554
22:00	0	261	67	2	8	0	0	0	2	0	0	0	0	340
23:00	1	141	33	0	7	0	0	2	1	0	0	0	0	185
Total	74	9521	2787	65	528	25	2	217	37	36	2	13	0	13307
Percent	0.6%	71.5%	20.9%	0.5%	4.0%	0.2%	0.0%	1.6%	0.3%	0.3%	0.0%	0.1%	0.0%	
AM Peak	07:00	07:00	07:00	07:00	07:00	06:00		07:00	07:00	09:00		11:00		07:00
Vol.	9	643	196	7	37	4		15	5	4		1		915
PM Peak	16:00	17:00	15:00	13:00	17:00	17:00	12:00	15:00	17:00	16:00	14:00	18:00		17:00
Vol.	8	709	207	8	46	5	1	28	4	7	1	4		1006
Grand Total	74	9521	2787	65	528	25	2	217	37	36	2	13	0	13307
Percent	0.6%	71.5%	20.9%	0.5%	4.0%	0.2%	0.0%	1.6%	0.3%	0.3%	0.0%	0.1%	0.0%	

Counts Unlimtied, Inc.
25286 Jaclyn Avenue
Moreno Valley, CA 92507
(951) 485-7934

City of Rancho Cucamonga
Archibald Avenue
B/ 19th Street - State Route 210 EB Ramp
24 Hour Directional Classification Count
Southbound

RNCAR19210
Site Code: 0519150
Date Start: 04-Jun-09
Date End: 04-Jun-09

Start Time	Bikes	Cars & Trailers	2 Axle Long	Buses	2 Axle 6 Tire	3 Axle Single	4 Axle Single	<5 Axl Double	5 Axle Double	>6 Axl Double	<6 Axl Multi	6 Axle Multi	>6 Axl Multi	Total
06/04/09	1	83	15	0	2	0	0	0	0	0	0	0	0	101
01:00	0	49	11	0	1	0	0	0	0	0	0	0	0	61
02:00	0	28	5	0	2	0	0	0	0	0	0	0	0	35
03:00	1	40	10	0	2	0	0	0	0	0	0	0	0	53
04:00	1	70	28	0	7	1	0	0	0	0	0	0	0	107
05:00	3	188	69	1	13	1	0	1	2	0	0	0	0	278
06:00	2	302	72	1	20	0	0	5	2	0	0	0	0	404
07:00	**4**	**629**	**173**	2	**31**	2	0	**11**	1	**2**	0	0	0	**855**
08:00	2	610	125	1	15	0	**1**	5	0	0	0	0	0	759
09:00	4	444	138	0	23	1	0	4	1	0	0	0	0	615
10:00	1	437	106	**4**	28	0	0	5	**3**	0	0	0	0	584
11:00	2	452	122	3	25	**3**	0	6	0	0	0	0	0	613
12 PM	2	496	130	2	25	0	0	2	0	0	0	0	0	657
13:00	6	519	145	1	27	1	0	2	0	1	0	0	0	702
14:00	4	616	179	**5**	39	1	0	5	**3**	0	0	0	0	852
15:00	4	662	187	4	**44**	1	0	7	2	1	0	0	0	912
16:00	**9**	681	191	2	42	**3**	0	**10**	0	0	0	0	0	938
17:00	6	**723**	**203**	4	36	0	0	8	1	**2**	0	0	0	**983**
18:00	3	665	143	1	24	0	0	7	2	0	0	0	0	845
19:00	3	513	117	0	22	1	0	1	1	0	0	0	0	658
20:00	6	417	93	1	14	0	0	2	2	0	0	0	0	535
21:00	3	430	76	1	12	1	0	0	0	0	0	0	0	523
22:00	1	275	53	0	10	1	0	1	0	0	0	0	0	341
23:00	0	154	30	0	4	0	0	0	0	0	0	0	0	188
Total	68	9483	2421	33	468	17	1	82	20	6	0	0	0	12599
Percent	0.5%	75.3%	19.2%	0.3%	3.7%	0.1%	0.0%	0.7%	0.2%	0.0%	0.0%	0.0%	0.0%	
AM Peak	07:00	07:00	07:00	10:00	07:00	11:00	08:00	07:00	10:00	07:00				07:00
Vol.	4	629	173	4	31	3	1	11	3	2				855
PM Peak	16:00	17:00	17:00	14:00	15:00	16:00		16:00	14:00	17:00				17:00
Vol.	9	723	203	5	44	3		10	3	2				983
Grand Total	68	9483	2421	33	468	17	1	82	20	6	0	0	0	12599
Percent	0.5%	75.3%	19.2%	0.3%	3.7%	0.1%	0.0%	0.7%	0.2%	0.0%	0.0%	0.0%	0.0%	

Counts Unlimtied, Inc.
25286 Jaclyn Avenue
Moreno Valley, CA 92507
(951) 485-7934

City of Rancho Cucamonga
Archibald Avenue
B/ 19th Street - State Route 210 EB Ramp
24 Hour Directional Classification Count
Northbound, Southbound

RNCAR19210
Site Code: 0519150
Date Start: 04-Jun-09
Date End: 04-Jun-09

Start Time	Bikes	Cars & Trailers	2 Axle Long	Buses	2 Axle 6 Tire	3 Axle Single	4 Axle Single	<5 Axl Double	5 Axle Double	>6 Axl Double	<6 Axl Multi	6 Axle Multi	>6 Axl Multi	Total
06/04/09	1	136	39	0	2	0	0	0	0	0	0	0	0	178
01:00	0	95	19	0	2	0	0	0	0	0	0	0	0	116
02:00	1	65	13	0	4	0	0	0	0	0	0	0	0	83
03:00	1	67	16	1	4	0	0	1	0	0	0	0	0	90
04:00	2	189	77	1	16	1	0	0	1	0	0	0	0	287
05:00	6	432	175	2	41	1	0	4	3	0	0	0	0	664
06:00	7	702	216	1	51	4	0	12	4	0	0	0	0	997
07:00	**13**	**1272**	**369**	**9**	**68**	4	0	**26**	**6**	3	0	0	0	**1770**
08:00	2	1138	281	3	35	0	**1**	12	1	0	0	0	0	1473
09:00	11	911	259	1	48	2	0	13	2	**4**	0	0	0	1251
10:00	4	857	234	5	45	2	0	10	6	1	0	0	0	1164
11:00	4	928	248	5	55	**5**	0	18	1	0	0	**1**	0	1265
12 PM	3	978	267	3	49	2	**1**	12	0	0	0	0	0	1315
13:00	11	1000	297	9	54	3	0	17	2	3	0	2	0	1398
14:00	8	1195	368	**12**	79	2	0	32	4	3	**1**	0	0	1704
15:00	10	1299	394	8	**85**	3	0	**35**	**5**	5	0	1	0	1845
16:00	**17**	1369	369	6	83	**5**	1	28	2	7	0	2	0	1889
17:00	9	**1432**	**401**	9	82	5	0	35	5	**9**	1	1	0	**1989**
18:00	7	1318	336	7	61	0	0	21	2	4	0	**4**	0	1760
19:00	9	1043	269	2	47	1	0	7	3	2	0	1	0	1384
20:00	10	893	201	9	29	0	0	7	4	0	0	0	0	1153
21:00	4	854	177	3	27	1	0	6	3	1	0	1	0	1077
22:00	1	536	120	2	18	1	0	1	2	0	0	0	0	681
23:00	1	295	63	0	11	0	0	2	1	0	0	0	0	373
Total	142	19004	5208	98	996	42	3	299	57	42	2	13	0	25906
Percent	0.5%	73.4%	20.1%	0.4%	3.8%	0.2%	0.0%	1.2%	0.2%	0.2%	0.0%	0.1%	0.0%	
AM Peak	07:00	07:00	07:00	07:00	07:00	11:00	08:00	07:00	07:00	09:00		11:00		07:00
Vol.	13	1272	369	9	68	5	1	26	6	4		1		1770
PM Peak	16:00	17:00	17:00	14:00	15:00	16:00	12:00	15:00	15:00	17:00	14:00	18:00		17:00
Vol.	17	1432	401	12	85	5	1	35	5	9	1	4		1989
Grand Total	142	19004	5208	98	996	42	3	299	57	42	2	13	0	25906
Percent	0.5%	73.4%	20.1%	0.4%	3.8%	0.2%	0.0%	1.2%	0.2%	0.2%	0.0%	0.1%	0.0%	

Counts Unlimtied, Inc.
25286 Jaclyn Avenue
Moreno Valley, CA 92507
(951) 485-7934

City of Rancho Cucamonga
Haven Avenue
B/ 19th Street - State Route 210 EB Ramp
24 Hour Directional Classification Count
Northbound

RNCHA19210
Site Code: 0519150
Date Start: 04-Jun-09
Date End: 04-Jun-09

Start Time	Bikes	Cars & Trailers	2 Axle Long	Buses	2 Axle 6 Tire	3 Axle Single	4 Axle Single	<5 Axl Double	5 Axle Double	>6 Axl Double	<6 Axl Multi	6 Axle Multi	>6 Axl Multi	Total
06/04/09	1	113	24	0	2	0	0	0	1	0	0	0	0	141
01:00	0	54	7	0	1	0	0	0	0	0	0	0	0	62
02:00	0	34	10	0	3	0	0	0	0	0	0	0	0	47
03:00	0	49	19	0	0	0	0	1	0	0	0	0	0	69
04:00	0	92	52	1	10	0	0	0	0	0	0	0	0	155
05:00	0	235	116	3	22	0	0	6	1	0	0	0	0	383
06:00	2	441	169	5	27	0	0	0	1	0	0	0	0	645
07:00	3	**868**	230	**7**	25	1	0	**9**	2	0	0	0	0	**1145**
08:00	**6**	655	**239**	4	36	**3**	0	7	0	0	0	0	0	950
09:00	0	537	168	6	32	2	1	7	2	0	0	0	0	755
10:00	3	522	180	6	39	1	**2**	5	0	0	0	0	0	758
11:00	0	533	195	4	**41**	3	0	6	**3**	0	0	**1**	0	786
12 PM	2	649	206	4	39	**3**	0	7	1	0	0	0	0	911
13:00	5	659	212	3	34	0	0	10	2	1	0	0	0	926
14:00	6	856	281	9	37	1	0	10	**4**	3	0	1	0	1208
15:00	**12**	877	**283**	7	45	0	1	14	1	2	**2**	0	0	1244
16:00	7	**899**	267	5	45	1	**3**	18	3	5	0	0	0	**1253**
17:00	7	766	214	**10**	**50**	3	1	**31**	3	**9**	0	**2**	0	1096
18:00	5	899	234	4	41	0	0	19	1	0	0	0	0	1203
19:00	3	642	174	2	18	0	0	6	0	0	0	0	0	845
20:00	1	553	136	1	24	0	0	4	1	1	0	0	0	721
21:00	1	484	147	2	8	0	0	1	0	0	0	0	0	643
22:00	0	327	98	1	10	0	0	3	0	1	0	0	0	440
23:00	0	181	49	2	4	0	0	1	0	0	0	0	0	237
Total	64	11925	3710	86	593	18	8	165	26	22	2	4	0	16623
Percent	0.4%	71.7%	22.3%	0.5%	3.6%	0.1%	0.0%	1.0%	0.2%	0.1%	0.0%	0.0%	0.0%	
AM Peak	08:00	07:00	08:00	07:00	11:00	08:00	10:00	07:00	11:00			11:00		07:00
Vol.	6	868	239	7	41	3	2	9	3			1		1145
PM Peak	15:00	16:00	15:00	17:00	17:00	12:00	16:00	17:00	14:00	17:00	15:00	17:00		16:00
Vol.	12	899	283	10	50	3	3	31	4	9	2	2		1253
Grand Total	64	11925	3710	86	593	18	8	165	26	22	2	4	0	16623
Percent	0.4%	71.7%	22.3%	0.5%	3.6%	0.1%	0.0%	1.0%	0.2%	0.1%	0.0%	0.0%	0.0%	

Counts Unlimtied, Inc.
25286 Jaclyn Avenue
Moreno Valley, CA 92507
(951) 485-7934

City of Rancho Cucamonga
Haven Avenue
B/ 19th Street - State Route 210 EB Ramp
24 Hour Directional Classification Count
Southbound

RNCHA19210
Site Code: 0519150
Date Start: 04-Jun-09
Date End: 04-Jun-09

Start Time	Bikes	Cars & Trailers	2 Axle Long	Buses	2 Axle 6 Tire	3 Axle Single	4 Axle Single	<5 Axl Double	5 Axle Double	>6 Axl Double	<6 Axl Multi	6 Axle Multi	>6 Axl Multi	Total
06/04/09	1	99	23	1	2	0	0	0	0	0	0	0	0	126
01:00	1	86	10	0	3	0	0	1	0	0	0	0	0	101
02:00	0	41	9	0	3	0	0	1	1	0	0	0	0	55
03:00	0	49	12	0	1	0	0	2	0	0	0	0	0	64
04:00	0	71	18	1	4	0	0	0	0	0	0	0	0	94
05:00	1	159	62	0	13	0	0	2	0	0	0	0	0	237
06:00	1	355	119	5	22	1	0	0	0	0	0	0	0	503
07:00	**3**	817	207	5	35	2	0	4	3	0	0	0	0	1076
08:00	2	**935**	**209**	**6**	**46**	0	0	**8**	3	0	0	0	0	**1209**
09:00	1	571	138	2	29	0	0	4	**4**	**1**	**1**	0	0	751
10:00	2	560	162	3	30	**4**	0	5	0	0	0	0	0	766
11:00	0	583	184	6	36	1	0	3	1	0	0	0	0	814
12 PM	2	673	154	3	35	**1**	0	1	**5**	0	**1**	0	0	875
13:00	3	673	196	**4**	26	0	0	6	2	0	1	0	0	911
14:00	3	779	187	2	34	0	0	2	2	0	0	0	0	1009
15:00	**6**	**944**	255	4	**45**	0	0	**7**	2	**1**	0	**1**	0	**1265**
16:00	2	918	**260**	4	35	0	0	2	0	0	0	0	0	1221
17:00	4	900	245	3	42	0	0	4	0	0	0	0	0	1198
18:00	5	858	175	3	21	1	0	4	1	1	0	0	0	1069
19:00	6	613	129	2	14	0	0	2	2	0	0	0	0	768
20:00	1	505	105	2	14	0	0	1	3	0	0	0	0	631
21:00	3	460	100	1	11	0	0	0	0	0	0	0	0	575
22:00	1	316	70	3	7	0	0	2	1	1	0	0	0	401
23:00	1	207	27	0	4	0	0	0	0	0	0	0	0	239
Total	49	12172	3056	60	512	10	0	61	30	4	3	1	0	15958
Percent	0.3%	76.3%	19.2%	0.4%	3.2%	0.1%	0.0%	0.4%	0.2%	0.0%	0.0%	0.0%	0.0%	
AM Peak	07:00	08:00	08:00	08:00	08:00	10:00		08:00	09:00	09:00	09:00			08:00
Vol.	3	935	209	6	46	4		8	4	1	1			1209
PM Peak	15:00	15:00	16:00	13:00	15:00	12:00		15:00	12:00	15:00	12:00	15:00		15:00
Vol.	6	944	260	4	45	1		7	5	1	1	1		1265
Grand Total	49	12172	3056	60	512	10	0	61	30	4	3	1	0	15958
Percent	0.3%	76.3%	19.2%	0.4%	3.2%	0.1%	0.0%	0.4%	0.2%	0.0%	0.0%	0.0%	0.0%	

Counts Unlimtied, Inc.
25286 Jaclyn Avenue
Moreno Valley, CA 92507
(951) 485-7934

City of Rancho Cucamonga
Haven Avenue
B/ 19th Street - State Route 210 EB Ramp
24 Hour Directional Classification Count
Northbound, Southbound

RNCHA19210
Site Code: 0519150
Date Start: 04-Jun-09
Date End: 04-Jun-09

Start Time	Bikes	Cars & Trailers	2 Axle Long	Buses	2 Axle 6 Tire	3 Axle Single	4 Axle Single	<5 Axl Double	5 Axle Double	>6 Axl Double	<6 Axl Multi	6 Axle Multi	>6 Axl Multi	Total
06/04/09	2	212	47	1	4	0	0	0	1	0	0	0	0	267
01:00	1	140	17	0	4	0	0	1	0	0	0	0	0	163
02:00	0	75	19	0	6	0	0	1	1	0	0	0	0	102
03:00	0	98	31	0	1	0	0	3	0	0	0	0	0	133
04:00	0	163	70	2	14	0	0	0	0	0	0	0	0	249
05:00	1	394	178	3	35	0	0	8	1	0	0	0	0	620
06:00	3	796	288	10	49	1	0	0	1	0	0	0	0	1148
07:00	6	**1685**	437	**12**	60	3	0	13	5	0	0	0	0	**2221**
08:00	**8**	1590	**448**	10	**82**	3	0	**15**	3	0	0	0	0	2159
09:00	1	1108	306	8	61	2	1	11	**6**	**1**	**1**	0	0	1506
10:00	5	1082	342	9	69	**5**	**2**	10	0	0	0	0	0	1524
11:00	0	1116	379	10	77	4	0	9	4	0	0	**1**	0	1600
12 PM	4	1322	360	7	74	**4**	0	8	**6**	0	1	0	0	1786
13:00	8	1332	408	7	60	0	0	16	4	1	1	0	0	1837
14:00	9	1635	468	11	71	1	0	12	6	3	0	1	0	2217
15:00	**18**	**1821**	**538**	11	90	0	1	21	3	3	**2**	1	0	**2509**
16:00	9	1817	527	9	80	1	**3**	20	3	5	0	0	0	2474
17:00	11	1666	459	**13**	**92**	3	1	**35**	3	**9**	0	**2**	0	2294
18:00	10	1757	409	7	62	1	0	23	2	1	0	0	0	2272
19:00	9	1255	303	4	32	0	0	8	2	0	0	0	0	1613
20:00	2	1058	241	3	38	0	0	5	4	1	0	0	0	1352
21:00	4	944	247	3	19	0	0	1	0	0	0	0	0	1218
22:00	1	643	168	4	17	0	0	5	1	2	0	0	0	841
23:00	1	388	76	2	8	0	0	1	0	0	0	0	0	476
Total	113	24097	6766	146	1105	28	8	226	56	26	5	5	0	32581
Percent	0.3%	74.0%	20.8%	0.4%	3.4%	0.1%	0.0%	0.7%	0.2%	0.1%	0.0%	0.0%	0.0%	
AM Peak	08:00	07:00	08:00	07:00	08:00	10:00	10:00	08:00	09:00	09:00	09:00	11:00		07:00
Vol.	8	1685	448	12	82	5	2	15	6	1	1	1		2221
PM Peak	15:00	15:00	15:00	17:00	17:00	12:00	16:00	17:00	12:00	17:00	15:00	17:00		15:00
Vol.	18	1821	538	13	92	4	3	35	6	9	2	2		2509
Grand Total	113	24097	6766	146	1105	28	8	226	56	26	5	5	0	32581
Percent	0.3%	74.0%	20.8%	0.4%	3.4%	0.1%	0.0%	0.7%	0.2%	0.1%	0.0%	0.0%	0.0%	

Counts Unlimtied, Inc.
25286 Jaclyn Avenue
Moreno Valley, CA 92507
(951) 485-7934

City of Rancho Cucamonga
Milliken Avenue
B/ Kenyan Way - State Route 210 EB Ramps
24 Hour Directional Classification Count
Northbound

RNCMIKE210
Site Code: 0519150
Date Start: 04-Jun-09
Date End: 04-Jun-09

Start Time	Bikes	Cars & Trailers	2 Axle Long	Buses	2 Axle 6 Tire	3 Axle Single	4 Axle Single	<5 Axl Double	5 Axle Double	>6 Axl Double	<6 Axl Multi	6 Axle Multi	>6 Axl Multi	Total
06/04/09	0	68	13	0	1	0	0	1	0	0	0	0	0	83
01:00	1	57	7	0	1	0	0	0	0	0	0	0	0	66
02:00	0	41	5	0	0	0	0	1	2	0	0	0	0	49
03:00	1	47	11	0	3	1	0	0	0	0	0	0	0	63
04:00	1	128	62	0	10	0	0	0	3	0	0	0	0	204
05:00	2	314	91	1	15	0	0	2	4	0	0	0	0	429
06:00	2	558	120	1	16	0	1	9	1	2	0	0	0	710
07:00	**6**	**926**	**202**	2	**42**	3	3	**25**	2	**3**	0	0	0	**1214**
08:00	6	736	185	**4**	24	**7**	**5**	17	3	0	0	1	0	988
09:00	2	525	135	3	21	1	2	6	**5**	0	1	**2**	0	703
10:00	2	484	126	3	15	3	0	12	5	1	0	0	0	651
11:00	0	500	139	3	23	2	4	9	4	1	**2**	0	0	687
12 PM	1	544	147	2	19	1	3	5	4	2	0	2	0	730
13:00	2	568	145	6	23	**5**	1	6	6	0	**1**	0	0	763
14:00	4	740	200	4	29	2	2	14	3	4	0	1	0	1003
15:00	3	817	210	5	28	4	3	20	5	6	1	1	0	1103
16:00	**9**	844	172	**8**	**32**	3	2	20	6	**7**	0	**3**	0	1106
17:00	4	**969**	**225**	3	29	4	5	**26**	**8**	4	0	2	0	**1279**
18:00	4	837	176	2	31	4	**6**	14	1	5	0	1	0	1081
19:00	2	544	140	1	16	1	5	7	0	0	0	0	0	716
20:00	1	516	116	3	18	1	0	5	2	1	0	0	0	663
21:00	3	428	107	1	8	0	0	1	1	1	0	1	0	551
22:00	1	303	70	0	8	0	1	0	0	0	0	0	0	383
23:00	1	153	21	1	1	0	0	0	2	0	0	0	0	179
Total	58	11647	2825	53	413	42	43	200	67	37	5	14	0	15404
Percent	0.4%	75.6%	18.3%	0.3%	2.7%	0.3%	0.3%	1.3%	0.4%	0.2%	0.0%	0.1%	0.0%	
AM Peak	07:00	07:00	07:00	08:00	07:00	08:00	08:00	07:00	09:00	07:00	11:00	09:00		07:00
Vol.	6	926	202	4	42	7	5	25	5	3	2	2		1214
PM Peak	16:00	17:00	17:00	16:00	16:00	13:00	18:00	17:00	17:00	16:00	13:00	16:00		17:00
Vol.	9	969	225	8	32	5	6	26	8	7	1	3		1279
Grand Total	58	11647	2825	53	413	42	43	200	67	37	5	14	0	15404
Percent	0.4%	75.6%	18.3%	0.3%	2.7%	0.3%	0.3%	1.3%	0.4%	0.2%	0.0%	0.1%	0.0%	

Counts Unlimtied, Inc.
25286 Jaclyn Avenue
Moreno Valley, CA 92507
(951) 485-7934

City of Rancho Cucamonga
Milliken Avenue
B/ Kenyan Way - State Route 210 EB Ramps
24 Hour Directional Classification Count
Southbound

RNCMIKE210
Site Code: 0519150
Date Start: 04-Jun-09
Date End: 04-Jun-09

Start Time	Bikes	Cars & Trailers	2 Axle Long	Buses	2 Axle 6 Tire	3 Axle Single	4 Axle Single	<5 Axl Double	5 Axle Double	>6 Axl Double	<6 Axl Multi	6 Axle Multi	>6 Axl Multi	Total
06/04/09	2	107	15	0	0	0	0	0	2	0	0	0	0	126
01:00	0	51	7	0	0	0	0	0	2	0	0	0	0	60
02:00	1	29	9	0	1	0	0	2	1	0	0	0	0	43
03:00	0	33	8	0	0	0	0	0	3	0	0	0	0	44
04:00	0	67	22	0	5	0	0	0	4	0	0	0	0	98
05:00	1	113	47	2	4	1	0	1	4	0	0	0	0	173
06:00	3	350	97	3	19	0	0	2	6	0	0	0	0	480
07:00	**4**	**887**	**215**	**7**	**29**	0	0	6	6	**2**	0	0	0	**1156**
08:00	2	773	201	4	22	0	0	**8**	3	0	**1**	0	0	1014
09:00	3	442	123	1	27	0	0	2	**8**	0	0	0	0	606
10:00	1	416	153	2	22	0	0	7	6	0	0	0	0	607
11:00	0	562	152	3	20	**2**	0	3	7	0	0	0	0	749
12 PM	4	518	146	3	26	0	0	2	**4**	0	**1**	0	0	704
13:00	1	583	144	6	29	**1**	0	5	2	1	0	0	0	772
14:00	2	767	201	**8**	36	0	0	4	3	1	0	0	0	1022
15:00	5	896	**251**	5	**38**	1	0	**10**	0	1	0	0	0	1207
16:00	6	893	210	5	30	0	0	3	2	0	0	0	0	1149
17:00	**9**	**925**	233	3	30	0	**1**	10	2	0	0	**1**	0	**1214**
18:00	3	891	211	3	29	0	0	6	3	**2**	0	0	0	1148
19:00	6	659	146	1	15	0	0	2	1	1	0	0	0	831
20:00	1	565	131	1	16	0	0	2	1	0	0	0	0	717
21:00	1	507	111	1	12	1	0	0	4	0	0	0	0	637
22:00	3	346	69	1	2	0	0	0	1	0	0	0	0	422
23:00	1	219	32	1	1	0	0	1	1	0	0	0	0	256
Total	59	11599	2934	60	413	6	1	76	76	8	2	1	0	15235
Percent	0.4%	76.1%	19.3%	0.4%	2.7%	0.0%	0.0%	0.5%	0.5%	0.1%	0.0%	0.0%	0.0%	
AM Peak	07:00	07:00	07:00	07:00	07:00	11:00		08:00	09:00	07:00	08:00			07:00
Vol.	4	887	215	7	29	2		8	8	2	1			1156
PM Peak	17:00	17:00	15:00	14:00	15:00	13:00	17:00	15:00	12:00	18:00	12:00	17:00		17:00
Vol.	9	925	251	8	38	1	1	10	4	2	1	1		1214
Grand Total	59	11599	2934	60	413	6	1	76	76	8	2	1	0	15235
Percent	0.4%	76.1%	19.3%	0.4%	2.7%	0.0%	0.0%	0.5%	0.5%	0.1%	0.0%	0.0%	0.0%	

Counts Unlimtied, Inc.
25286 Jaclyn Avenue
Moreno Valley, CA 92507
(951) 485-7934

City of Rancho Cucamonga
Milliken Avenue
B/ Kenyan Way - State Route 210 EB Ramps
24 Hour Directional Classification Count
Northbound, Southbound

RNCMIKE210
Site Code: 0519150
Date Start: 04-Jun-09
Date End: 04-Jun-09

Start Time	Bikes	Cars & Trailers	2 Axle Long	Buses	2 Axle 6 Tire	3 Axle Single	4 Axle Single	<5 Axl Double	5 Axle Double	>6 Axl Double	<6 Axl Multi	6 Axle Multi	>6 Axl Multi	Total
06/04/09	2	175	28	0	1	0	0	1	2	0	0	0	0	209
01:00	1	108	14	0	1	0	0	0	2	0	0	0	0	126
02:00	1	70	14	0	1	0	0	3	3	0	0	0	0	92
03:00	1	80	19	0	3	1	0	0	3	0	0	0	0	107
04:00	1	195	84	0	15	0	0	0	7	0	0	0	0	302
05:00	3	427	138	3	19	1	0	3	8	0	0	0	0	602
06:00	5	908	217	4	35	0	1	11	7	2	0	0	0	1190
07:00	**10**	**1813**	**417**	**9**	**71**	3	3	**31**	8	**5**	0	0	0	**2370**
08:00	8	1509	386	8	46	**7**	**5**	25	6	0	1	1	0	2002
09:00	5	967	258	4	48	1	2	8	**13**	0	1	**2**	0	1309
10:00	3	900	279	5	37	3	0	19	11	1	0	0	0	1258
11:00	0	1062	291	6	43	4	4	12	11	1	**2**	0	0	1436
12 PM	5	1062	293	5	45	1	3	7	8	2	**1**	2	0	1434
13:00	3	1151	289	12	52	**6**	1	11	8	1	1	0	0	1535
14:00	6	1507	401	12	65	2	2	18	6	5	0	1	0	2025
15:00	8	1713	**461**	10	**66**	5	3	30	5	**7**	1	1	0	2310
16:00	**15**	1737	382	**13**	62	3	2	23	8	7	0	**3**	0	2255
17:00	13	**1894**	458	6	59	4	**6**	**36**	**10**	4	0	3	0	**2493**
18:00	7	1728	387	5	60	4	6	20	4	7	0	1	0	2229
19:00	8	1203	286	2	31	1	5	9	1	1	0	0	0	1547
20:00	2	1081	247	4	34	1	0	7	3	1	0	0	0	1380
21:00	4	935	218	2	20	1	0	1	5	1	0	1	0	1188
22:00	4	649	139	1	10	0	1	0	1	0	0	0	0	805
23:00	2	372	53	2	2	0	0	1	3	0	0	0	0	435
Total	117	23246	5759	113	826	48	44	276	143	45	7	15	0	30639
Percent	0.4%	75.9%	18.8%	0.4%	2.7%	0.2%	0.1%	0.9%	0.5%	0.1%	0.0%	0.0%	0.0%	
AM Peak	07:00	07:00	07:00	07:00	07:00	08:00	08:00	07:00	09:00	07:00	11:00	09:00		07:00
Vol.	10	1813	417	9	71	7	5	31	13	5	2	2		2370
PM Peak	16:00	17:00	15:00	16:00	15:00	13:00	17:00	17:00	17:00	15:00	12:00	16:00		17:00
Vol.	15	1894	461	13	66	6	6	36	10	7	1	3		2493
Grand Total	117	23246	5759	113	826	48	44	276	143	45	7	15	0	30639
Percent	0.4%	75.9%	18.8%	0.4%	2.7%	0.2%	0.1%	0.9%	0.5%	0.1%	0.0%	0.0%	0.0%	

Counts Unlimtied, Inc.
25286 Jaclyn Avenue
Moreno Valley, CA 92507
(951) 485-7934

City of Rancho Cucamonga
Day Creek Boulevard
B/ Highland Avenue - State Route 210 EB
24 Hour Directional Volume Count

RNCDCHI210
Site Code: 0519150
Date Start: 04-Jun-09
Date End: 04-Jun-09

Start Time	04-Jun-09 Thu	Northbound Morning	Northbound Afternoon	Hour Totals Morning	Hour Totals Afternoon	Southbound Morning	Southbound Afternoon	Hour Totals Morning	Hour Totals Afternoon	Combined Totals Morning	Combined Totals Afternoon
12:00		40	168			41	196				
12:15		32	187			23	183				
12:30		35	177			28	208				
12:45		29	204	136	736	32	222	124	809	260	1545
01:00		23	190			21	168				
01:15		21	191			18	182				
01:30		29	221			26	213				
01:45		29	219	102	821	19	222	84	785	186	1606
02:00		12	209			22	195				
02:15		20	223			17	238				
02:30		13	253			17	281				
02:45		15	293	60	978	11	334	67	1048	127	2026
03:00		13	303			17	273				
03:15		18	270			14	271				
03:30		17	265			18	276				
03:45		30	273	78	1111	11	283	60	1103	138	2214
04:00		23	292			13	280				
04:15		34	257			34	280				
04:30		65	266			35	286				
04:45		74	259	196	1074	58	319	140	1165	336	2239
05:00		102	278			36	305				
05:15		94	**276**			43	**311**				
05:30		105	**303**			49	**295**				
05:45		95	**312**	396	1169	56	**310**	184	1221	580	2390
06:00		112	**289**			49	**315**				
06:15		145	248			92	293				
06:30		165	233			120	265				
06:45		193	216	615	986	152	245	413	1118	1028	2104
07:00		227	211			208	233				
07:15		**314**	197			**220**	219				
07:30		**297**	189			**252**	207				
07:45		**266**	183	1104	780	**311**	181	991	840	2095	1620
08:00		**253**	193			**221**	186				
08:15		187	196			174	204				
08:30		195	185			137	150				
08:45		169	238	804	812	139	173	671	713	1475	1525
09:00		139	255			157	160				
09:15		138	172			152	153				
09:30		166	189			137	133				
09:45		152	144	595	760	166	119	612	565	1207	1325
10:00		128	135			153	105				
10:15		134	107			175	98				
10:30		137	98			165	96				
10:45		159	92	558	432	178	70	671	369	1229	801
11:00		151	64			167	101				
11:15		152	77			187	74				
11:30		193	55			203	53				
11:45		169	48	665	244	181	48	738	276	1403	520
Total		5309	9903	5309	9903	4755	10012	4755	10012	10064	19915
Combined Total		15212		15212		14767		14767		29979	
AM Peak		07:15				07:15					
Vol.		1130				1004					
P.H.F.		0.900				0.807					
PM Peak			05:15				05:15				
Vol.			1180				1231				
P.H.F.			0.946				0.977				
Percentage		34.9%	65.1%			32.2%	67.8%				
ADT/AADT		ADT 29,979		AADT 29,979							

Counts Unlimtied, Inc.
25286 Jaclyn Avenue
Moreno Valley, CA 92507
(951) 485-7934

City of Rancho Cucamonga
Foorhill Boulevard
B/ Day Creek Boulevard - Interstate 15
24 Hour Directional Classification Count
Eastbound

RNCFODC15
Site Code: 0519150
Date Start: 04-Jun-09
Date End: 04-Jun-09

Start Time	Bikes	Cars & Trailers	2 Axle Long	Buses	2 Axle 6 Tire	3 Axle Single	4 Axle Single	<5 Axl Double	5 Axle Double	>6 Axl Double	<6 Axl Multi	6 Axle Multi	>6 Axl Multi	Total
06/04/09	1	338	56	0	2	1	0	2	4	0	0	0	0	404
01:00	3	215	40	2	3	2	0	0	5	0	0	0	0	270
02:00	1	160	44	0	4	3	0	0	6	0	0	0	0	218
03:00	0	66	22	0	2	2	0	0	4	0	0	0	0	96
04:00	3	119	38	0	11	0	0	1	11	0	0	0	0	183
05:00	1	283	103	2	17	0	0	2	9	0	0	0	0	417
06:00	3	576	132	6	34	1	0	12	7	0	0	0	0	771
07:00	**7**	555	144	5	32	3	0	11	2	**6**	0	0	0	765
08:00	7	764	192	11	55	5	0	13	12	5	0	**1**	0	1065
09:00	7	735	213	10	57	**11**	0	17	12	3	0	1	0	1066
10:00	5	912	282	13	68	6	0	14	**18**	4	0	1	0	1323
11:00	7	**1112**	**302**	**22**	**72**	5	0	**18**	17	6	0	1	0	**1562**
12 PM	7	1248	375	**16**	**73**	5	0	27	**20**	13	1	**4**	0	1789
13:00	13	1438	**400**	16	69	6	**2**	36	14	14	1	3	0	2012
14:00	6	1406	360	12	71	5	1	**44**	10	11	0	1	0	1927
15:00	11	1443	353	14	72	6	0	43	6	11	2	1	0	1962
16:00	13	1456	348	8	70	2	1	32	7	9	**3**	3	0	1952
17:00	9	**1665**	371	10	65	3	1	35	3	**23**	0	1	0	**2186**
18:00	**14**	1588	326	9	44	**8**	0	23	1	6	1	1	0	2021
19:00	6	1337	311	6	39	1	1	30	4	6	1	2	0	1744
20:00	13	1333	290	3	40	0	0	15	4	4	0	1	0	1703
21:00	11	1243	250	4	46	4	1	17	3	10	0	0	0	1589
22:00	6	893	169	2	18	1	0	4	5	1	0	0	0	1099
23:00	3	557	102	3	13	0	1	1	5	0	0	0	0	685
Total	157	21442	5223	174	977	80	8	397	189	132	9	21	0	28809
Percent	0.5%	74.4%	18.1%	0.6%	3.4%	0.3%	0.0%	1.4%	0.7%	0.5%	0.0%	0.1%	0.0%	
AM Peak	07:00	11:00	11:00	11:00	11:00	09:00		11:00	10:00	07:00		08:00		11:00
Vol.	7	1112	302	22	72	11		18	18	6		1		1562
PM Peak	18:00	17:00	13:00	12:00	12:00	18:00	13:00	14:00	12:00	17:00	16:00	12:00		17:00
Vol.	14	1665	400	16	73	8	2	44	20	23	3	4		2186
Grand Total	157	21442	5223	174	977	80	8	397	189	132	9	21	0	28809
Percent	0.5%	74.4%	18.1%	0.6%	3.4%	0.3%	0.0%	1.4%	0.7%	0.5%	0.0%	0.1%	0.0%	

Counts Unlimtied, Inc.
25286 Jaclyn Avenue
Moreno Valley, CA 92507
(951) 485-7934

City of Rancho Cucamonga
Foorhill Boulevard
B/ Day Creek Boulevard - Interstate 15
24 Hour Directional Classification Count
Westbound

RNCFODC15
Site Code: 0519150
Date Start: 04-Jun-09
Date End: 04-Jun-09

Start Time	Bikes	Cars & Trailers	2 Axle Long	Buses	2 Axle 6 Tire	3 Axle Single	4 Axle Single	<5 Axl Double	5 Axle Double	>6 Axl Double	<6 Axl Multi	6 Axle Multi	>6 Axl Multi	Total
06/04/09	1	185	34	0	3	0	0	0	5	0	0	0	0	228
01:00	1	102	23	0	3	1	0	0	7	0	0	0	0	137
02:00	0	120	21	0	1	0	0	1	4	0	0	0	0	147
03:00	0	105	25	0	2	0	0	0	7	0	0	0	0	139
04:00	1	217	74	2	4	0	0	1	6	0	0	0	0	305
05:00	5	480	159	5	18	3	0	4	6	0	0	0	0	680
06:00	5	743	256	9	51	3	0	10	6	0	0	0	0	1083
07:00	2	1079	295	13	48	3	0	15	4	1	0	0	0	1460
08:00	4	1111	321	13	69	3	1	15	12	0	0	1	0	1550
09:00	5	1052	306	11	56	3	0	14	24	3	0	0	0	1474
10:00	10	1152	348	21	67	1	1	13	10	2	0	0	0	1625
11:00	12	1375	397	15	82	5	0	24	18	5	1	0	0	1934
12 PM	13	1537	389	15	85	5	0	27	13	4	1	1	0	2090
13:00	14	1484	356	13	70	4	0	23	11	3	1	1	0	1980
14:00	13	1425	346	14	56	3	0	20	15	5	0	0	0	1897
15:00	9	1497	362	6	78	2	0	22	13	5	0	0	0	1994
16:00	15	1464	368	7	46	4	0	21	1	5	1	2	0	1934
17:00	10	1499	346	4	48	3	0	23	3	0	0	2	0	1938
18:00	10	1518	329	4	33	2	1	20	8	3	0	1	0	1929
19:00	14	1351	284	7	32	0	0	9	3	3	0	0	0	1703
20:00	8	1251	269	5	22	1	0	6	3	0	0	0	0	1565
21:00	7	795	170	2	24	0	0	8	5	0	0	0	0	1011
22:00	7	569	128	2	9	0	0	2	6	0	0	0	0	723
23:00	4	348	59	1	8	0	0	0	8	0	0	0	0	428
Total	170	22459	5665	169	915	46	3	278	198	39	4	8	0	29954
Percent	0.6%	75.0%	18.9%	0.6%	3.1%	0.2%	0.0%	0.9%	0.7%	0.1%	0.0%	0.0%	0.0%	
AM Peak	11:00	11:00	11:00	10:00	11:00	11:00	08:00	11:00	09:00	11:00	11:00	08:00		11:00
Vol.	12	1375	397	21	82	5	1	24	24	5	1	1		1934
PM Peak	16:00	12:00	12:00	12:00	12:00	12:00	18:00	12:00	14:00	14:00	12:00	16:00		12:00
Vol.	15	1537	389	15	85	5	1	27	15	5	1	2		2090
Grand Total	170	22459	5665	169	915	46	3	278	198	39	4	8	0	29954
Percent	0.6%	75.0%	18.9%	0.6%	3.1%	0.2%	0.0%	0.9%	0.7%	0.1%	0.0%	0.0%	0.0%	

Counts Unlimtied, Inc.
25286 Jaclyn Avenue
Moreno Valley, CA 92507
(951) 485-7934

City of Rancho Cucamonga
Foorhill Boulevard
B/ Day Creek Boulevard - Interstate 15
24 Hour Directional Classification Count
Eastbound, Westbound

RNCFODC15
Site Code: 0519150
Date Start: 04-Jun-09
Date End: 04-Jun-09

Start Time	Bikes	Cars & Trailers	2 Axle Long	Buses	2 Axle 6 Tire	3 Axle Single	4 Axle Single	<5 Axl Double	5 Axle Double	>6 Axl Double	<6 Axl Multi	6 Axle Multi	>6 Axl Multi	Total
06/04/09	2	523	90	0	5	1	0	2	9	0	0	0	0	632
01:00	4	317	63	2	6	3	0	0	12	0	0	0	0	407
02:00	1	280	65	0	5	3	0	1	10	0	0	0	0	365
03:00	0	171	47	0	4	2	0	0	11	0	0	0	0	235
04:00	4	336	112	2	15	0	0	2	17	0	0	0	0	488
05:00	6	763	262	7	35	3	0	6	15	0	0	0	0	1097
06:00	8	1319	388	15	85	4	0	22	13	0	0	0	0	1854
07:00	9	1634	439	18	80	6	0	26	6	7	0	0	0	2225
08:00	11	1875	513	24	124	8	1	28	24	5	0	2	0	2615
09:00	12	1787	519	21	113	14	0	31	36	6	0	1	0	2540
10:00	15	2064	630	34	135	7	1	27	28	6	0	1	0	2948
11:00	19	2487	699	37	154	10	0	42	35	11	1	1	0	3496
12 PM	20	2785	764	31	158	10	0	54	33	17	2	5	0	3879
13:00	27	2922	756	29	139	10	2	59	25	17	2	4	0	3992
14:00	19	2831	706	26	127	8	1	64	25	16	0	1	0	3824
15:00	20	2940	715	20	150	8	0	65	19	16	2	1	0	3956
16:00	28	2920	716	15	116	6	1	53	8	14	4	5	0	3886
17:00	19	3164	717	14	113	6	1	58	6	23	0	3	0	4124
18:00	24	3106	655	13	77	10	1	43	9	9	1	2	0	3950
19:00	20	2688	595	13	71	1	1	39	7	9	1	2	0	3447
20:00	21	2584	559	8	62	1	0	21	7	4	0	1	0	3268
21:00	18	2038	420	6	70	4	1	25	8	10	0	0	0	2600
22:00	13	1462	297	4	27	1	0	6	11	1	0	0	0	1822
23:00	7	905	161	4	21	0	1	1	13	0	0	0	0	1113
Total	327	43901	10888	343	1892	126	11	675	387	171	13	29	0	58763
Percent	0.6%	74.7%	18.5%	0.6%	3.2%	0.2%	0.0%	1.1%	0.7%	0.3%	0.0%	0.0%	0.0%	
AM Peak	11:00	11:00	11:00	11:00	11:00	09:00	08:00	11:00	09:00	11:00	11:00	08:00		11:00
Vol.	19	2487	699	37	154	14	1	42	36	11	1	2		3496
PM Peak	16:00	17:00	12:00	12:00	12:00	12:00	13:00	15:00	12:00	17:00	16:00	12:00		17:00
Vol.	28	3164	764	31	158	10	2	65	33	23	4	5		4124
Grand Total	327	43901	10888	343	1892	126	11	675	387	171	13	29	0	58763
Percent	0.6%	74.7%	18.5%	0.6%	3.2%	0.2%	0.0%	1.1%	0.7%	0.3%	0.0%	0.0%	0.0%	

Counts Unlimtied, Inc.
25286 Jaclyn Avenue
Moreno Valley, CA 92507
(951) 485-7934

City of Rancho Cucamonga
Base Line Road
B/ Etiwanda Avenue - Shelby Place
24 Hour Directional Classification Count
Eastbound

RNCBAETSH
Site Code: 0519150
Date Start: 04-Jun-09
Date End: 04-Jun-09

Start Time	Bikes	Cars & Trailers	2 Axle Long	Buses	2 Axle 6 Tire	3 Axle Single	4 Axle Single	<5 Axl Double	5 Axle Double	>6 Axl Double	<6 Axl Multi	6 Axle Multi	>6 Axl Multi	Total
06/04/09	0	48	13	1	1	0	0	0	0	0	0	0	0	63
01:00	1	30	10	0	1	0	0	0	0	0	0	0	0	42
02:00	0	15	6	0	1	0	0	0	1	0	0	0	0	23
03:00	0	24	9	0	2	0	0	0	0	0	0	0	0	35
04:00	0	64	18	0	3	0	0	0	0	0	0	0	0	85
05:00	0	116	40	0	9	0	0	0	0	0	0	0	0	165
06:00	**5**	235	94	0	13	0	0	0	0	0	0	0	0	347
07:00	1	**481**	120	2	14	0	0	**2**	0	0	0	0	0	**620**
08:00	1	427	**132**	**3**	**23**	1	0	1	**2**	0	0	0	**2**	592
09:00	0	296	88	2	13	1	0	0	0	0	0	0	0	400
10:00	2	261	111	2	20	**3**	0	1	1	0	0	0	0	401
11:00	2	345	120	3	12	1	0	2	0	0	0	0	1	486
12 PM	3	380	145	4	**25**	0	0	3	1	0	**2**	0	**1**	564
13:00	1	380	120	2	25	**2**	0	2	**2**	0	0	0	0	534
14:00	2	484	152	**6**	19	0	0	1	0	0	0	0	0	664
15:00	1	583	**207**	2	20	0	0	0	1	**1**	0	0	0	815
16:00	2	574	162	4	23	1	0	4	1	0	0	0	0	771
17:00	**4**	**729**	195	6	19	0	0	**5**	1	0	0	0	1	**960**
18:00	1	558	135	0	14	0	0	1	1	0	0	0	1	711
19:00	1	455	113	0	12	0	0	1	0	0	0	0	0	582
20:00	3	442	97	1	11	0	0	3	0	0	1	0	0	558
21:00	0	400	105	0	5	0	0	1	0	0	0	0	1	512
22:00	0	214	53	0	5	0	0	0	1	0	0	0	0	273
23:00	0	129	25	0	3	0	0	0	1	0	0	0	0	158
Total	30	7670	2270	38	293	9	0	27	13	1	3	0	7	10361
Percent	0.3%	74.0%	21.9%	0.4%	2.8%	0.1%	0.0%	0.3%	0.1%	0.0%	0.0%	0.0%	0.1%	
AM Peak	06:00	07:00	08:00	08:00	08:00	10:00		07:00	08:00				08:00	07:00
Vol.	5	481	132	3	23	3		2	2				2	620
PM Peak	17:00	17:00	15:00	14:00	12:00	13:00		17:00	13:00	15:00	12:00		12:00	17:00
Vol.	4	729	207	6	25	2		5	2	1	2		1	960
Grand Total	30	7670	2270	38	293	9	0	27	13	1	3	0	7	10361
Percent	0.3%	74.0%	21.9%	0.4%	2.8%	0.1%	0.0%	0.3%	0.1%	0.0%	0.0%	0.0%	0.1%	

Counts Unlimtied, Inc.
25286 Jaclyn Avenue
Moreno Valley, CA 92507
(951) 485-7934

City of Rancho Cucamonga
Base Line Road
B/ Etiwanda Avenue - Shelby Place
24 Hour Directional Classification Count
Westbound

RNCBAETSH
Site Code: 0519150
Date Start: 04-Jun-09
Date End: 04-Jun-09

Start Time	Bikes	Cars & Trailers	2 Axle Long	Buses	2 Axle 6 Tire	3 Axle Single	4 Axle Single	<5 Axl Double	5 Axle Double	>6 Axl Double	<6 Axl Multi	6 Axle Multi	>6 Axl Multi	Total
06/04/09	1	38	11	1	0	0	0	0	0	0	0	0	0	51
01:00	0	27	9	0	1	0	0	0	0	0	0	0	0	37
02:00	0	17	5	0	0	0	0	0	0	0	0	0	0	22
03:00	0	29	7	1	1	0	0	0	1	0	0	0	0	39
04:00	1	42	20	0	2	0	0	0	2	0	0	0	0	67
05:00	2	99	24	2	5	0	0	2	0	0	0	0	0	134
06:00	**4**	225	75	**7**	13	1	0	1	0	0	0	0	0	326
07:00	2	**521**	**168**	4	**34**	**2**	0	**3**	1	0	0	0	**2**	**737**
08:00	0	468	123	3	20	0	0	1	2	0	0	0	1	618
09:00	1	327	76	2	11	0	0	3	**3**	0	0	0	0	423
10:00	0	315	108	0	16	1	0	3	1	0	**2**	0	0	446
11:00	2	375	118	4	17	1	0	2	1	0	0	0	0	520
12 PM	0	397	117	3	17	0	0	0	**1**	0	0	0	0	535
13:00	0	425	105	2	20	0	0	1	1	**1**	0	0	0	555
14:00	2	544	**154**	2	18	0	0	1	0	0	0	0	0	721
15:00	5	576	154	**4**	18	**2**	0	3	0	0	0	0	0	**762**
16:00	0	544	152	1	**22**	0	0	2	0	1	0	0	**1**	723
17:00	3	593	133	1	13	0	0	3	0	0	0	0	1	747
18:00	**8**	**606**	112	1	16	0	0	**4**	0	0	0	0	1	748
19:00	0	451	105	0	12	0	0	2	0	0	0	0	0	570
20:00	3	301	77	0	13	0	0	0	0	0	0	0	1	395
21:00	4	287	61	0	7	0	0	0	0	0	0	0	0	359
22:00	0	167	51	0	5	0	0	0	0	0	0	0	0	223
23:00	0	105	32	0	2	0	0	0	0	0	0	0	0	139
Total	38	7479	1997	38	283	7	0	31	13	2	2	0	7	9897
Percent	0.4%	75.6%	20.2%	0.4%	2.9%	0.1%	0.0%	0.3%	0.1%	0.0%	0.0%	0.0%	0.1%	
AM Peak	06:00	07:00	07:00	06:00	07:00	07:00		07:00	09:00		10:00		07:00	07:00
Vol.	4	521	168	7	34	2		3	3		2		2	737
PM Peak	18:00	18:00	14:00	15:00	16:00	15:00		18:00	12:00	13:00			16:00	15:00
Vol.	8	606	154	4	22	2		4	1	1			1	762
Grand Total	38	7479	1997	38	283	7	0	31	13	2	2	0	7	9897
Percent	0.4%	75.6%	20.2%	0.4%	2.9%	0.1%	0.0%	0.3%	0.1%	0.0%	0.0%	0.0%	0.1%	

Counts Unlimtied, Inc.
25286 Jaclyn Avenue
Moreno Valley, CA 92507
(951) 485-7934

City of Rancho Cucamonga
Base Line Road
B/ Etiwanda Avenue - Shelby Place
24 Hour Directional Classification Count
Eastbound, Westbound

RNCBAETSH
Site Code: 0519150
Date Start: 04-Jun-09
Date End: 04-Jun-09

Start Time	Bikes	Cars & Trailers	2 Axle Long	Buses	2 Axle 6 Tire	3 Axle Single	4 Axle Single	<5 Axl Double	5 Axle Double	>6 Axl Double	<6 Axl Multi	6 Axle Multi	>6 Axl Multi	Total
06/04/09	1	86	24	2	1	0	0	0	0	0	0	0	0	114
01:00	1	57	19	0	2	0	0	0	0	0	0	0	0	79
02:00	0	32	11	0	1	0	0	0	1	0	0	0	0	45
03:00	0	53	16	1	3	0	0	0	1	0	0	0	0	74
04:00	1	106	38	0	5	0	0	0	2	0	0	0	0	152
05:00	2	215	64	2	14	0	0	2	0	0	0	0	0	299
06:00	**9**	460	169	**7**	26	1	0	1	0	0	0	0	0	673
07:00	3	**1002**	**288**	6	**48**	2	0	**5**	1	0	0	0	2	**1357**
08:00	1	895	255	6	43	1	0	2	**4**	0	0	0	**3**	1210
09:00	1	623	164	4	24	1	0	3	3	0	0	0	0	823
10:00	2	576	219	2	36	**4**	0	4	2	0	**2**	0	0	847
11:00	4	720	238	7	29	2	0	4	1	0	0	0	1	1006
12 PM	3	777	262	7	42	0	0	3	2	0	**2**	0	1	1099
13:00	1	805	225	4	**45**	**2**	0	3	**3**	**1**	0	0	0	1089
14:00	4	1028	306	**8**	37	0	0	2	0	0	0	0	0	1385
15:00	6	1159	**361**	6	38	2	0	3	1	1	0	0	0	1577
16:00	2	1118	314	5	45	1	0	6	1	1	0	0	1	1494
17:00	7	**1322**	328	7	32	0	0	**8**	1	0	0	0	**2**	**1707**
18:00	**9**	1164	247	1	30	0	0	5	1	0	0	0	2	1459
19:00	1	906	218	0	24	0	0	3	0	0	0	0	0	1152
20:00	6	743	174	1	24	0	0	3	0	0	1	0	1	953
21:00	4	687	166	0	12	0	0	1	0	0	0	0	1	871
22:00	0	381	104	0	10	0	0	0	1	0	0	0	0	496
23:00	0	234	57	0	5	0	0	0	1	0	0	0	0	297
Total	68	15149	4267	76	576	16	0	58	26	3	5	0	14	20258
Percent	0.3%	74.8%	21.1%	0.4%	2.8%	0.1%	0.0%	0.3%	0.1%	0.0%	0.0%	0.0%	0.1%	
AM Peak	06:00	07:00	07:00	06:00	07:00	10:00		07:00	08:00		10:00		08:00	07:00
Vol.	9	1002	288	7	48	4		5	4		2		3	1357
PM Peak	18:00	17:00	15:00	14:00	13:00	13:00		17:00	13:00	13:00	12:00		17:00	17:00
Vol.	9	1322	361	8	45	2		8	3	1	2		2	1707
Grand Total	68	15149	4267	76	576	16	0	58	26	3	5	0	14	20258
Percent	0.3%	74.8%	21.1%	0.4%	2.8%	0.1%	0.0%	0.3%	0.1%	0.0%	0.0%	0.0%	0.1%	

ATTACHMENT B

PEAK PERIOD TRAFFIC COUNT DATA

This Page Intentionally Left Blank

PASSENGER CAR EQUIVALENCY PEAK HOUR COUNT SUMMARY

INTERSECTION 1
Grove Avenue (NS) / Foothill Boulevard / SR-66 (EW)

AM PEAK HOUR

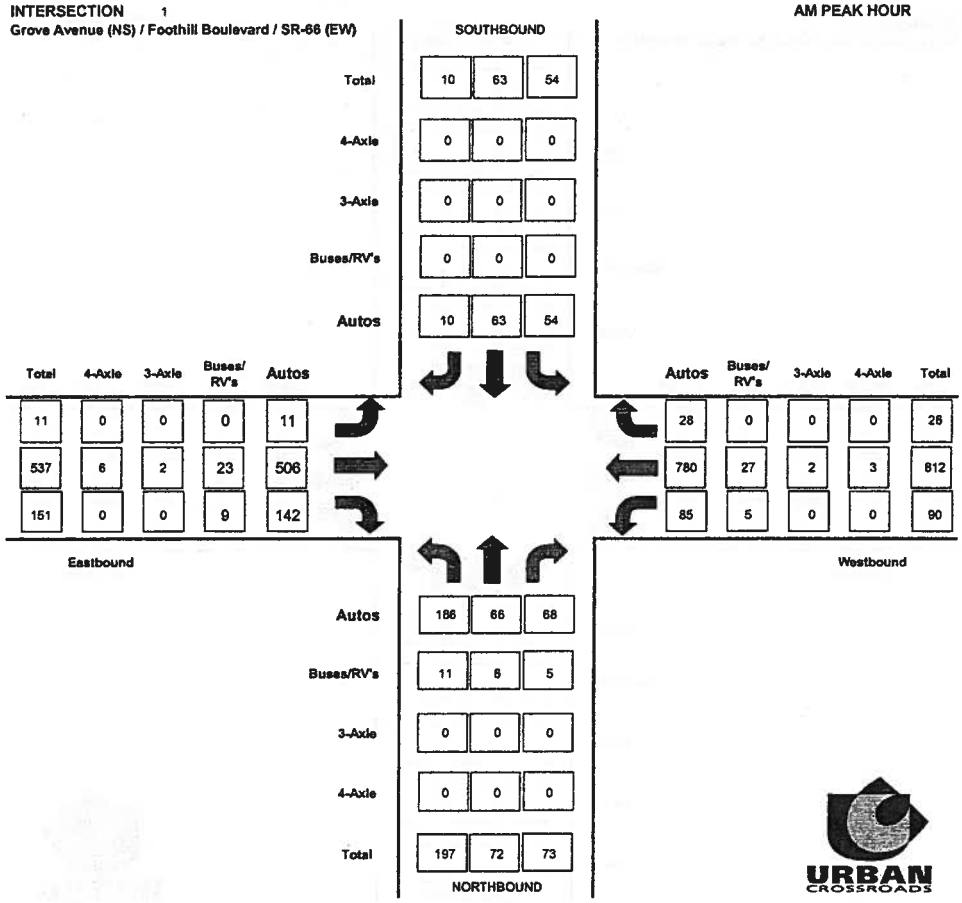

INTERSECTION 1
Grove Avenue (NS) / Foothill Boulevard / SR-66 (EW)

PM PEAK HOUR

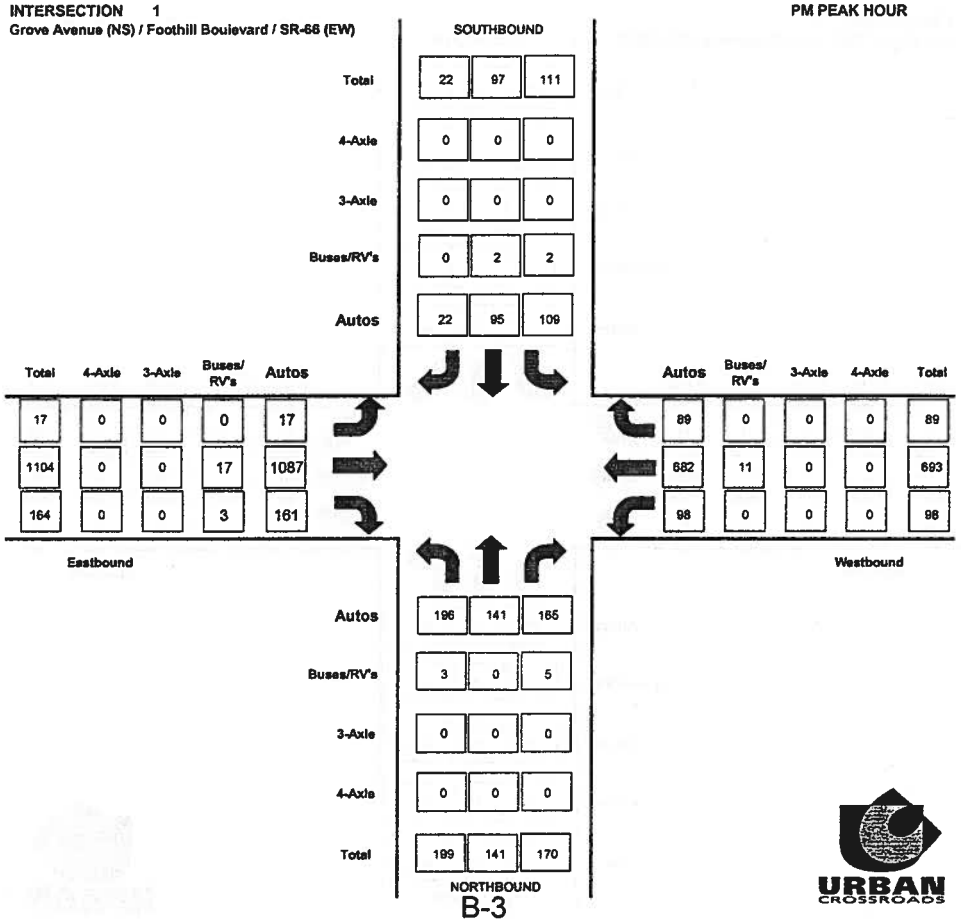

RAW PEAK HOUR COUNT SUMMARY

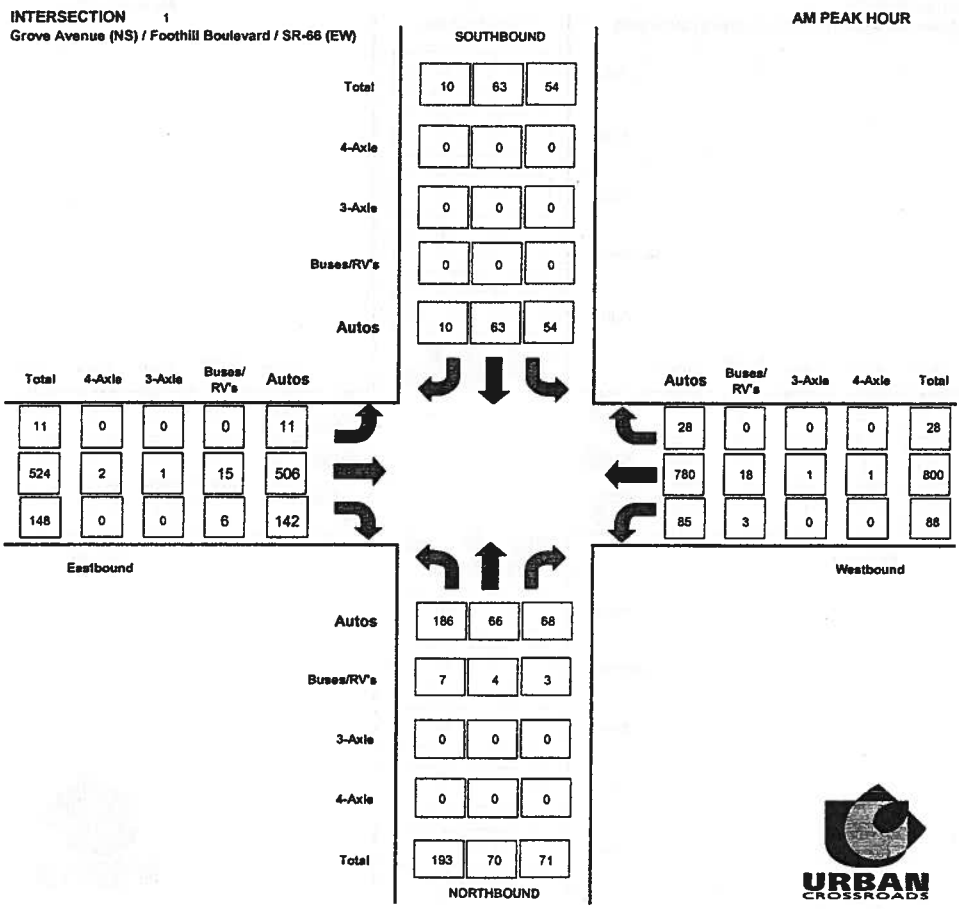

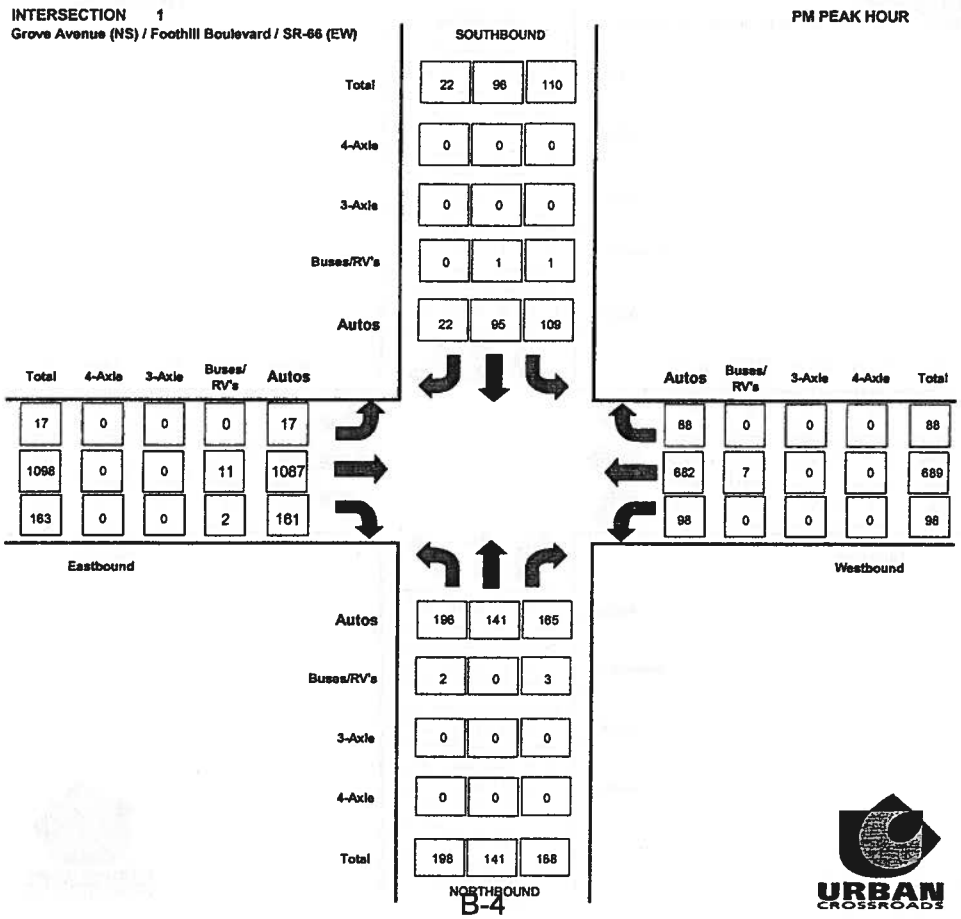

Counts Unlimited Inc.
25286 Jaclyn Avenue
Moreno Valley, CA 92557
951-485-7934

1

City of Rancho Cucamonga
N/S: Grove Avenue
E/W: Foothill Boulevard
Weather: Sunny

File Name : RNCGRFOAM
Site Code : 9150083
Start Date : 5/27/2009
Page No : 1

Groups Printed- Passenger Vehicles - Large 2 Axle Vehicles - 3 Axle Vehicles - 4+ Axle Trucks

	Grove Avenue Southbound					Foothill Boulevard Westbound					Grove Avenue Northbound					Foothill Boulevard Eastbound					
Start Time	Left	Thru	Right	RoR	App. Total	Left	Thru	Right	RoR	App. Total	Left	Thru	Right	RoR	App. Total	Left	Thru	Right	RoR	App. Total	Int. Total
07:00 AM	7	20	0	5	32	14	164	4	1	183	27	15	7	9	58	1	76	12	8	97	370
07:15 AM	13	24	0	5	42	24	186	14	1	225	40	19	9	14	82	0	89	30	11	130	479
07:30 AM	15	21	2	4	42	25	237	6	5	273	41	19	7	14	81	3	100	23	11	137	533
07:45 AM	15	16	1	0	32	23	212	3	2	240	45	15	9	12	81	3	165	31	7	206	559
Total	50	81	3	14	148	86	799	27	9	921	153	68	32	49	302	7	430	96	37	570	1941
08:00 AM	8	15	0	1	24	17	177	3	3	200	47	23	4	11	85	3	121	30	8	162	471
08:15 AM	16	11	1	1	29	23	174	4	2	203	60	13	0	14	87	2	138	27	11	178	497
08:30 AM	14	14	1	1	30	25	178	14	4	221	31	14	7	16	68	2	107	21	12	142	461
08:45 AM	13	13	0	3	29	26	166	8	3	203	43	13	7	14	77	3	116	20	8	147	456
Total	51	53	2	6	112	91	695	29	12	827	181	63	18	55	317	10	482	98	39	629	1885
Grand Total	101	134	5	20	260	177	1494	56	21	1748	334	131	50	104	619	17	912	194	76	1199	3826
Apprch %	38.8	51.5	1.9	7.7		10.1	85.5	3.2	1.2		54	21.2	8.1	16.8		1.4	76.1	16.2	6.3		
Total %	2.6	3.5	0.1	0.5	6.8	4.6	39	1.5	0.5	45.7	8.7	3.4	1.3	2.7	16.2	0.4	23.8	5.1	2	31.3	
Passenger Vehicles							1457														
% Passenger Vehicles	99	100	100	95	99.2	96.6	97.5	96.4	100	97.4	95.8	96.2	92	99	96.1	100	96.2	92.8	97.4	95.7	96.8
Large 2 Axle Vehicles																					
% Large 2 Axle Vehicles	1	0	0	5	0.8	3.4	2.3	3.6	0	2.4	3.6	3.1	8	1	3.4	0	3.3	5.7	2.6	3.6	2.8
3 Axle Vehicles	0	0	0	0	0	0	2	0	0	2	1	1	0	0	2	0	2	1	0	3	7
% 3 Axle Vehicles	0	0	0	0	0	0	0.1	0	0	0.1	0.3	0.8	0	0	0.3	0	0.2	0.5	0	0.3	0.2
4+ Axle Trucks	0	0	0	0	0	0	1	0	0	1	1	0	0	0	1	0	3	2	0	5	7
% 4+ Axle Trucks																					

	Grove Avenue Southbound					Foothill Boulevard Westbound					Grove Avenue Northbound					Foothill Boulevard Eastbound					
Start Time	Left	Thru	Right	RoR	App. Total	Left	Thru	Right	RoR	App. Total	Left	Thru	Right	RoR	App. Total	Left	Thru	Right	RoR	App. Total	Int. Total
Peak Hour Analysis From 07:00 AM to 08:45 AM - Peak 1 of 1																					
Peak Hour for Entire Intersection Begins at 07:30 AM																					
07:30 AM	15	**21**	**2**	4	**42**	**25**	**237**	**6**	**5**	**273**	41	19	7	14	81	**3**	100	23	**11**	137	533
07:45 AM	15	16	1	0	32	23	212	3	2	240	45	15	**9**	12	81	3	**165**	**31**	7	**206**	**559**
08:00 AM	8	15	0	1	24	17	177	3	3	200	47	**23**	4	11	85	3	121	30	8	162	471
08:15 AM	**16**	11	1	1	29	23	174	4	2	203	**60**	13	0	14	**87**	2	138	27	11	178	497
Total Volume	54	63	4	6	127	88	800	16	12	916	193	70	20	51	334	11	524	111	37	683	2060
% App. Total	42.5	49.6	3.1	4.7		9.6	87.3	1.7	1.3		57.8	21	6	15.3		1.6	76.7	16.3	5.4		
PHF	.844	.750	.500	.375	.756	.880	.844	.667	.600	.839	.804	.761	.556	.911	.960	.917	.794	.895	.841	.829	.921

Counts Unlimited Inc.
25286 Jaclyn Avenue
Moreno Valley, CA 92557
951-485-7934

City of Rancho Cucamonga
N/S: Grove Avenue
E/W: Foothill Boulevard
Weather: Sunny

File Name : RNCGRFOAM
Site Code : 9150083
Start Date : 5/27/2009
Page No : 2

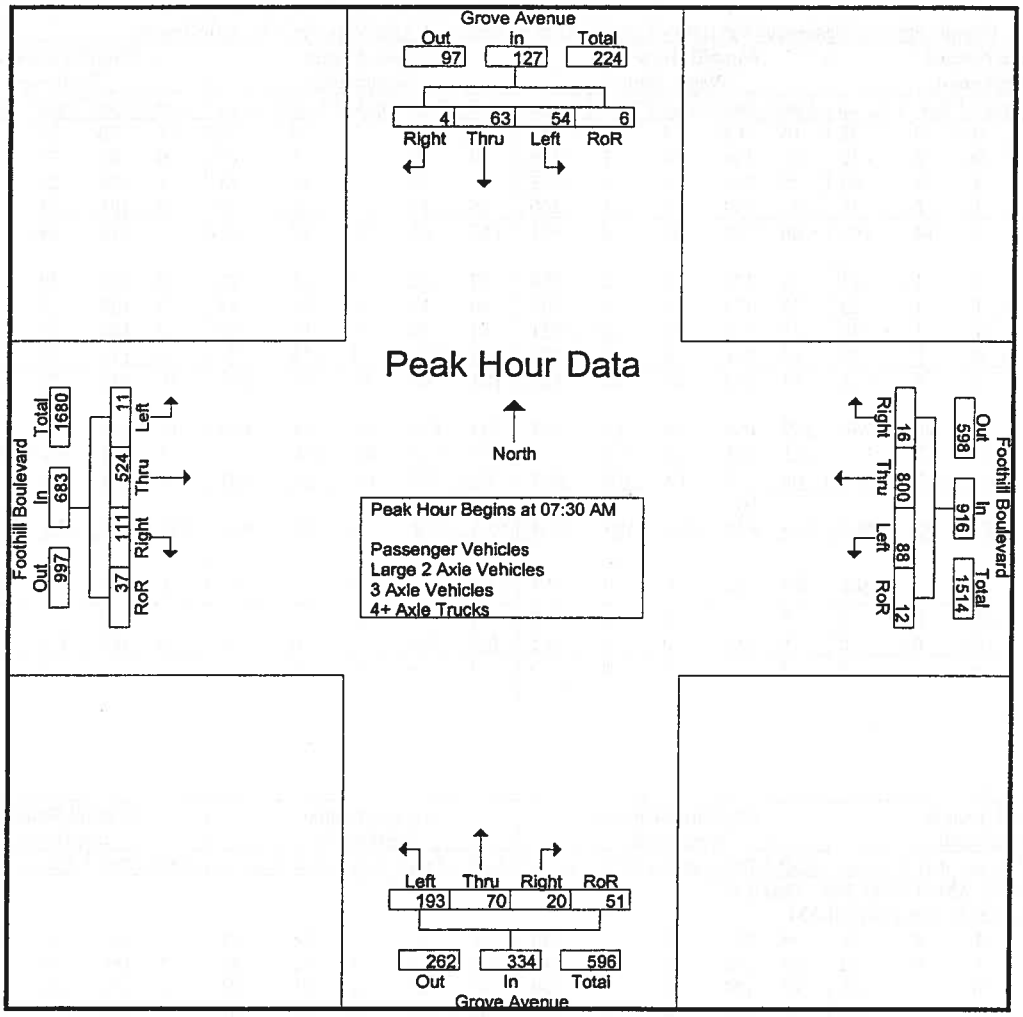

Peak Hour Analysis From 07:00 AM to 08:45 AM - Peak 1 of 1

Peak Hour for Each Approach Begins at:

	07:00 AM					07:15 AM					07:30 AM					07:45 AM				
+0 mins.	7	20	0	5	32	24	186	14	1	225	41	19	7	14	81	3	165	31	7	206
+15 mins.	13	24	0	5	42	25	237	6	5	273	45	15	9	12	81	3	121	30	8	162
+30 mins.	15	21	2	4	42	23	212	3	2	240	47	23	4	11	85	2	138	27	11	178
+45 mins.	15	16	1	0	32	17	177	3	3	200	60	13	0	14	87	2	107	21	12	142
Total Volume	50	81	3	14	148	89	812	26	11	938	193	70	20	51	334	10	531	109	38	688
% App. Total	33.8	54.7	2	9.5		9.5	86.6	2.8	1.2		57.8	21	6	15.3		1.5	77.2	15.8	5.5	
PHF	.833	.844	.375	.700	.881	.890	.857	.464	.550	.859	.804	.761	.556	.911	.960	.833	.805	.879	.792	.835

Counts Unlimited Inc.
25286 Jaclyn Avenue
Moreno Valley, CA 92557
951-485-7934

City of Rancho Cucamonga
N/S: Grove Avenue
E/W: Foothill Boulevard
Weather: Sunny

File Name : RNCGRFOAM
Site Code : 9150083
Start Date : 5/27/2009
Page No : 1

Groups Printed- Passenger Vehicles

	Grove Avenue Southbound					Foothill Boulevard Westbound					Grove Avenue Northbound					Foothill Boulevard Eastbound					
Start Time	Left	Thru	Right	RoR	App. Total	Left	Thru	Right	RoR	App. Total	Left	Thru	Right	RoR	App. Total	Left	Thru	Right	RoR	App. Total	Int. Total
07:00 AM	6	20	0	4	30	13	161	3	1	178	25	14	5	9	53	1	70	9	7	87	348
07:15 AM	13	24	0	5	42	22	182	14	1	219	40	19	9	14	82	0	87	29	11	127	470
07:30 AM	15	21	2	4	42	24	229	6	5	264	41	19	7	13	80	3	96	21	11	131	517
07:45 AM	15	16	1	0	32	23	208	3	2	236	43	14	9	12	78	3	160	29	7	199	545
Total	49	81	3	13	146	82	780	26	9	897	149	66	30	48	293	7	413	88	36	544	1880
08:00 AM	8	15	0	1	24	16	173	3	3	195	44	21	2	11	78	3	117	29	8	157	454
08:15 AM	16	11	1	1	29	22	170	4	2	198	58	12	0	14	84	2	133	26	11	172	483
08:30 AM	14	14	1	1	30	25	173	13	4	215	27	14	7	16	64	2	102	19	11	134	443
08:45 AM	13	13	0	3	29	26	161	8	3	198	42	13	7	14	76	3	112	18	8	141	444
Total	51	53	2	6	112	89	677	28	12	806	171	60	16	55	302	10	464	92	38	604	1824
Grand Total	100	134	5	19	258	171	1457	54	21	1703	320	126	46	103	595	17	877	180	74	1148	3704
Apprch %	38.8	51.9	1.9	7.4		10	85.6	3.2	1.2		53.8	21.2	7.7	17.3		1.5	76.4	15.7	6.4		
Total %	2.7	3.6	0.1	0.5	7	4.6	39.3	1.5	0.6	46	8.6	3.4	1.2	2.8	16.1	0.5	23.7	4.9	2	31	

	Grove Avenue Southbound					Foothill Boulevard Westbound					Grove Avenue Northbound					Foothill Boulevard Eastbound					
Start Time	Left	Thru	Right	RoR	App. Total		Thru	Right	RoR	App. Total		Thru	Right	RoR	App. Total		Thru	Right	RoR	App. Total	Int. Total
Peak Hour Analysis From 07:30 AM to 08:15 AM - Peak 1 of 1																					
Peak Hour for Entire Intersection Begins at 07:30 AM																					
07:30 AM	15	**21**	**2**	**4**	42	**24**	**229**	6	**5**	**264**	41	19	7	13	80	**3**	96	21	**11**	131	517
07:45 AM	15	16	1	0	32	23	208	3	2	236	43	14	**9**	12	78	3	**160**	**29**	7	**199**	**545**
08:00 AM	8	15	0	1	24	16	173	3	3	195	44	**21**	2	11	78	3	117	29	8	157	454
08:15 AM	**16**	11	1	1	29	22	170	4	2	198	**58**	12	0	**14**	**84**	2	133	26	11	172	483
Total Volume	54	63	4	6	127	85	780	16	12	893	186	66	18	50	320	11	506	105	37	659	1999
% App. Total	42.5	49.6	3.1	4.7		9.5	87.3	1.8	1.3		58.1	20.6	5.6	15.6		1.7	76.8	15.9	5.6		
PHF	.844	.750	.500	.375	.756	.885	.852	.667	.600	.846	.802	.786	.500	.893	.952	.917	.791	.905	.841	.828	.917

Counts Unlimited Inc.
25286 Jaclyn Avenue
Moreno Valley, CA 92557
951-485-7934

City of Rancho Cucamonga
N/S: Grove Avenue
E/W: Foothill Boulevard
Weather: Sunny

File Name : RNCGRFOAM
Site Code : 9150083
Start Date : 5/27/2009
Page No : 2

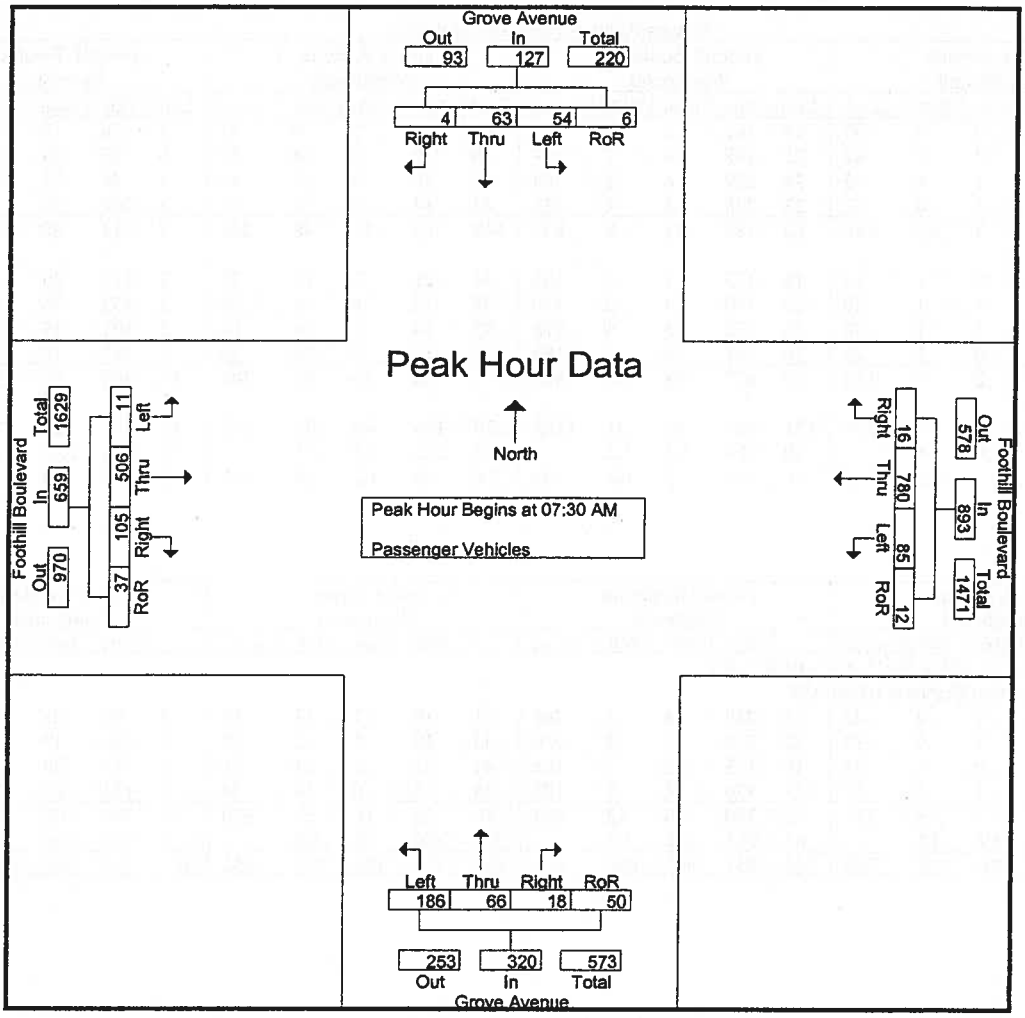

Peak Hour Analysis From 07:30 AM to 08:15 AM - Peak 1 of 1

Peak Hour for Each Approach Begins at:

	07:30 AM					07:30 AM					07:30 AM					07:30 AM				
+0 mins.	15	**21**	**2**	**4**	**42**	**24**	**229**	**6**	**5**	**264**	41	19	7	13	80	**3**	96	21	**11**	131
+15 mins.	15	16	1	0	32	23	208	3	2	236	43	14	**9**	12	78	3	**160**	**29**	7	**199**
+30 mins.	8	15	0	1	24	16	173	3	3	195	44	**21**	2	11	78	3	117	29	8	157
+45 mins.	**16**	11	1	1	29	22	170	4	2	198	**58**	12	0	**14**	**84**	2	133	26	11	172
Total Volume	54	63	4	6	127	85	780	16	12	893	186	66	18	50	320	11	506	105	37	659
% App. Total	42.5	49.6	3.1	4.7		9.5	87.3	1.8	1.3		58.1	20.6	5.6	15.6		1.7	76.8	15.9	5.6	
PHF	.844	.750	.500	.375	.756	.885	.852	.667	.600	.846	.802	.786	.500	.893	.952	.917	.791	.905	.841	.828

Counts Unlimited Inc.
25286 Jaclyn Avenue
Moreno Valley, CA 92557
951-485-7934

City of Rancho Cucamonga
N/S: Grove Avenue
E/W: Foothill Boulevard
Weather: Sunny

File Name : RNCGRFOAM
Site Code : 9150083
Start Date : 5/27/2009
Page No : 1

Groups Printed- Large 2 Axle Vehicles

	Grove Avenue Southbound					Foothill Boulevard Westbound					Grove Avenue Northbound					Foothill Boulevard Eastbound					
Start Time	Left	Thru	Right	RoR	App. Total	Left	Thru	Right	RoR	App. Total	Left	Thru	Right	RoR	App. Total	Left	Thru	Right	RoR	App. Total	Int. Total
07:00 AM	1	0	0	1	2	1	3	1	0	5	2	0	2	0	4	0	6	1	1	8	19
07:15 AM	0	0	0	0	0	2	4	0	0	6	0	0	0	0	0	0	1	1	0	2	8
07:30 AM	0	0	0	0	0	1	8	0	0	9	0	0	0	1	1	0	4	2	0	6	16
07:45 AM	0	0	0	0	0	0	3	0	0	3	2	1	0	0	3	0	4	2	0	6	12
Total	1	0	0	1	2	4	18	1	0	23	4	1	2	1	8	0	15	6	1	22	55
08:00 AM	0	0	0	0	0	1	3	0	0	4	3	2	2	0	7	0	3	1	0	4	15
08:15 AM	0	0	0	0	0	1	4	0	0	5	2	1	0	0	3	0	4	1	0	5	13
08:30 AM	0	0	0	0	0	0	5	1	0	6	2	0	0	0	2	0	4	2	1	7	15
08:45 AM	0	0	0	0	0	0	4	0	0	4	1	0	0	0	1	0	4	1	0	5	10
Total	0	0	0	0	0	2	16	1	0	19	8	3	2	0	13	0	15	5	1	21	53
Grand Total	1	0	0	1	2	6	34	2	0	42	12	4	4	1	21	0	30	11	2	43	108
Apprch %	50	0	0	50		14.3	81	4.8	0		57.1	19	19	4.8		0	69.8	25.6	4.7		
Total %	0.9	0	0	0.9	1.9	5.6	31.5	1.9	0	38.9	11.1	3.7	3.7	0.9	19.4	0	27.8	10.2	1.9	39.8	

	Grove Avenue Southbound					Foothill Boulevard Westbound					Grove Avenue Northbound					Foothill Boulevard Eastbound					
Start Time	Left	Thru	Right	RoR	App. Total		Thru	Right	RoR	App. Total		Thru	Right	RoR	App. Total		Thru	Right	RoR	App. Total	Int. Total
Peak Hour Analysis From 07:30 AM to 08:15 AM - Peak 1 of 1																					
Peak Hour for Entire Intersection Begins at 07:30 AM																					
07:30 AM	0	0	0	0	0	1	8	0	0	9	0	0	0	1	1	0	4	2	0	6	16
07:45 AM	0	0	0	0	0	0	3	0	0	3	2	1	0	0	3	0	4	2	0	6	12
08:00 AM	0	0	0	0	0	1	3	0	0	4	3	2	2	0	7	0	3	1	0	4	15
08:15 AM	0	0	0	0	0	1	4	0	0	5	2	1	0	0	3	0	4	1	0	5	13
Total Volume	0	0	0	0	0	3	18	0	0	21	7	4	2	1	14	0	15	6	0	21	56
% App. Total	0	0	0	0		14.3	85.7	0	0		50	28.6	14.3	7.1		0	71.4	28.6	0		
PHF	.000	.000	.000	.000	.000	.750	.563	.000	.000	.583	.583	.500	.250	.250	.500	.000	.938	.750	.000	.875	.875

Counts Unlimited Inc.
25286 Jaclyn Avenue
Moreno Valley, CA 92557
951-485-7934

City of Rancho Cucamonga
N/S: Grove Avenue
E/W: Foothill Boulevard
Weather: Sunny

File Name : RNCGRFOAM
Site Code : 9150083
Start Date : 5/27/2009
Page No : 2

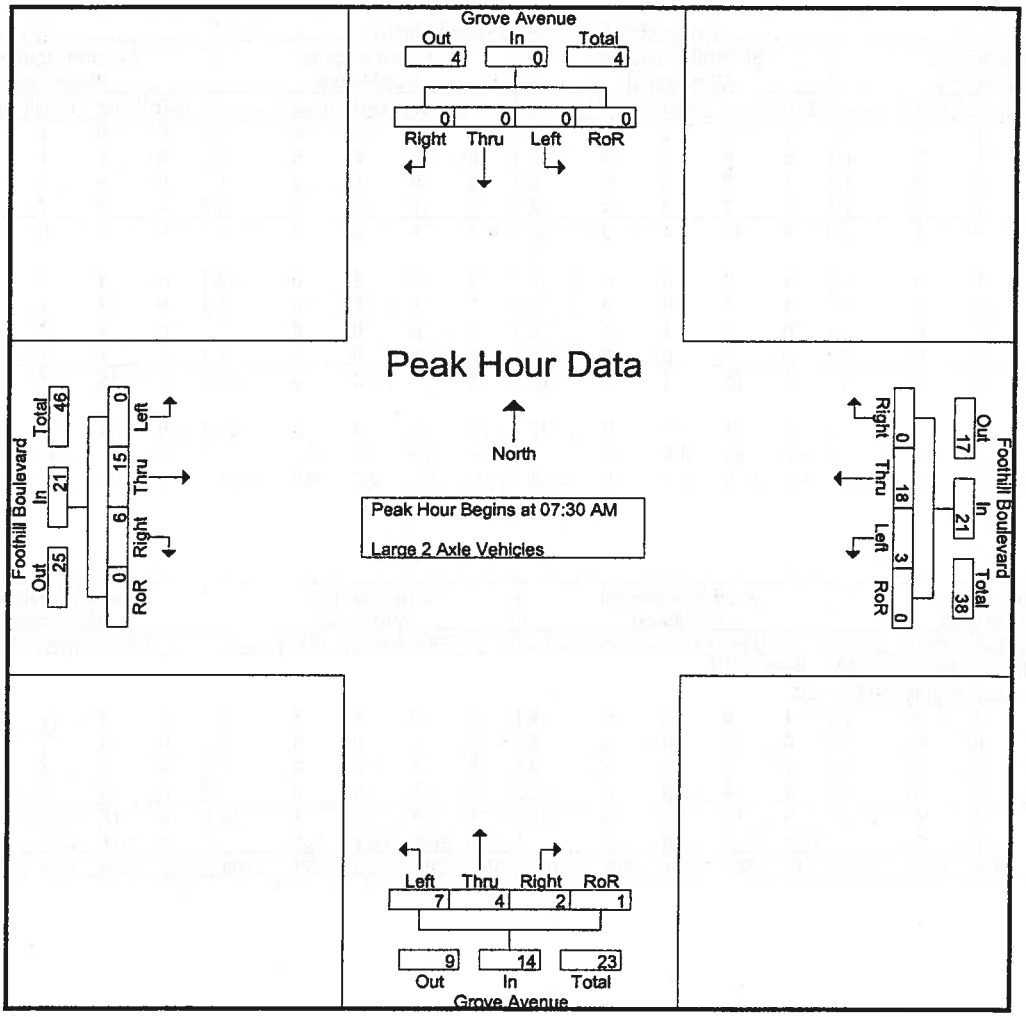

Peak Hour Analysis From 07:30 AM to 08:15 AM - Peak 1 of 1

Peak Hour for Each Approach Begins at:

	07:30 AM					07:30 AM					07:30 AM					07:30 AM				
+0 mins.	0	0	0	0	0	1	8	0	0	9	0	0	0	1	1	0	4	2	0	6
+15 mins.	0	0	0	0	0	0	3	0	0	3	2	1	0	0	3	0	4	2	0	6
+30 mins.	0	0	0	0	0	1	3	0	0	4	3	2	2	0	7	0	3	1	0	4
+45 mins.	0	0	0	0	0	1	4	0	0	5	2	1	0	0	3	0	4	1	0	5
Total Volume	0	0	0	0	0	3	18	0	0	21	7	4	2	1	14	0	15	6	0	21
% App. Total	0	0	0	0		14.3	85.7	0	0		50	28.6	14.3	7.1		0	71.4	28.6	0	
PHF	.000	.000	.000	.000	.000	.750	.563	.000	.000	.583	.583	.500	.250	.250	.500	.000	.938	.750	.000	.875

Counts Unlimited Inc.
25286 Jaclyn Avenue
Moreno Valley, CA 92557
951-485-7934

City of Rancho Cucamonga
N/S: Grove Avenue
E/W: Foothill Boulevard
Weather: Sunny

File Name : RNCGRFOAM
Site Code : 9150083
Start Date : 5/27/2009
Page No : 1

Groups Printed- 3 Axle Vehicles

	Grove Avenue Southbound					Foothill Boulevard Westbound					Grove Avenue Northbound					Foothill Boulevard Eastbound					
Start Time	Left	Thru	Right	RoR	App. Total	Left	Thru	Right	RoR	App. Total	Left	Thru	Right	RoR	App. Total	Left	Thru	Right	RoR	App. Total	Int. Total
07:00 AM	0	0	0	0	0	0	0	0	0	0	0	1	0	0	1	0	0	0	0	0	1
07:15 AM	0	0	0	0	0	0	0	0	0	0	0	0	0	0	0	0	1	0	0	1	1
07:30 AM	0	0	0	0	0	0	0	0	0	0	0	0	0	0	0	0	0	0	0	0	0
07:45 AM	0	0	0	0	0	0	0	0	0	0	0	0	0	0	0	0	0	0	0	0	0
Total	0	0	0	0	0	0	0	0	0	0	0	1	0	0	1	0	1	0	0	1	2
08:00 AM	0	0	0	0	0	0	1	0	0	1	0	0	0	0	0	0	0	0	0	0	1
08:15 AM	0	0	0	0	0	0	0	0	0	0	0	0	0	0	0	0	1	0	0	1	1
08:30 AM	0	0	0	0	0	0	0	0	0	0	1	0	0	0	1	0	0	0	0	0	1
08:45 AM	0	0	0	0	0	0	1	0	0	1	0	0	0	0	0	0	0	1	0	1	2
Total	0	0	0	0	0	0	2	0	0	2	1	0	0	0	1	0	1	1	0	2	5
Grand Total	0	0	0	0	0	0	2	0	0	2	1	1	0	0	2	0	2	1	0	3	7
Apprch %	0	0	0	0		0	100	0	0		50	50	0	0		0	66.7	33.3	0		
Total %	0	0	0	0	0	0	28.6	0	0	28.6	14.3	14.3	0	0	28.6	0	28.6	14.3	0	42.9	

	Grove Avenue Southbound					Foothill Boulevard Westbound					Grove Avenue Northbound					Foothill Boulevard Eastbound					
Start Time	Left	Thru	Right	RoR	App. Total		Thru	Right	RoR	App. Total		Thru	Right	RoR	App. Total		Thru	Right	RoR	App. Total	Int. Total
Peak Hour Analysis From 07:30 AM to 08:15 AM - Peak 1 of 1																					
Peak Hour for Entire Intersection Begins at 07:30 AM																					
07:30 AM	0	0	0	0	0	0	0	0	0	0	0	0	0	0	0	0	0	0	0	0	0
07:45 AM	0	0	0	0	0	0	0	0	0	0	0	0	0	0	0	0	0	0	0	0	0
08:00 AM	0	0	0	0	0	0	1	0	0	1	0	0	0	0	0	0	0	0	0	0	1
08:15 AM	0	0	0	0	0	0	0	0	0	0	0	0	0	0	0	0	1	0	0	1	1
Total Volume	0	0	0	0	0	0	1	0	0	1	0	0	0	0	0	0	1	0	0	1	2
% App. Total	0	0	0	0		0	100	0	0		0	0	0	0		0	100	0	0		
PHF	.000	.000	.000	.000	.000	.000	.250	.000	.000	.250	.000	.000	.000	.000	.000	.000	.250	.000	.000	.250	.500

Counts Unlimited Inc.
25286 Jaclyn Avenue
Moreno Valley, CA 92557
951-485-7934

City of Rancho Cucamonga
N/S: Grove Avenue
E/W: Foothill Boulevard
Weather: Sunny

File Name : RNCGRFOAM
Site Code : 9150083
Start Date : 5/27/2009
Page No : 2

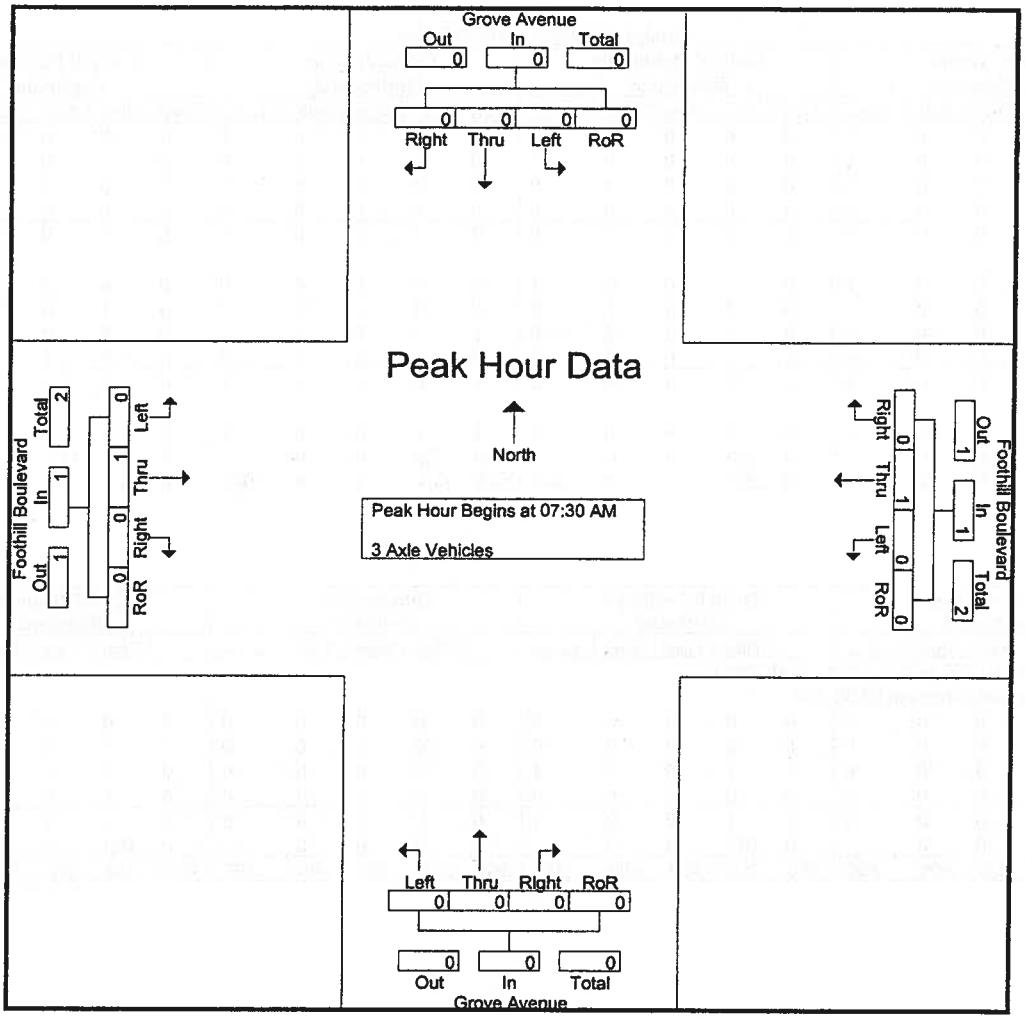

Peak Hour Analysis From 07:30 AM to 08:15 AM - Peak 1 of 1

Peak Hour for Each Approach Begins at:

	07:30 AM					07:30 AM					07:30 AM					07:30 AM				
+0 mins.	0	0	0	0	0	0	0	0	0	0	0	0	0	0	0	0	0	0	0	0
+15 mins.	0	0	0	0	0	0	0	0	0	0	0	0	0	0	0	0	0	0	0	0
+30 mins.	0	0	0	0	0	0	1	0	0	1	0	0	0	0	0	0	0	0	0	0
+45 mins.	0	0	0	0	0	0	0	0	0	0	0	0	0	0	0	0	1	0	0	1
Total Volume	0	0	0	0	0	0	1	0	0	1	0	0	0	0	0	0	1	0	0	1
% App. Total	0	0	0	0		0	100	0	0		0	0	0	0		0	100	0	0	
PHF	.000	.000	.000	.000	.000	.000	.250	.000	.000	.250	.000	.000	.000	.000	.000	.000	.250	.000	.000	.250

Counts Unlimited Inc.
25286 Jaclyn Avenue
Moreno Valley, CA 92557
951-485-7934

City of Rancho Cucamonga
N/S: Grove Avenue
E/W: Foothill Boulevard
Weather: Sunny

File Name : RNCGRFOAM
Site Code : 9150083
Start Date : 5/27/2009
Page No : 1

Groups Printed- 4+ Axle Trucks

	Grove Avenue Southbound					Foothill Boulevard Westbound					Grove Avenue Northbound					Foothill Boulevard Eastbound					
Start Time	Left	Thru	Right	RoR	App. Total	Left	Thru	Right	RoR	App. Total	Left	Thru	Right	RoR	App. Total	Left	Thru	Right	RoR	App. Total	Int. Total
07:00 AM	0	0	0	0	0	0	0	0	0	0	0	0	0	0	0	0	0	2	0	2	2
07:15 AM	0	0	0	0	0	0	0	0	0	0	0	0	0	0	0	0	0	0	0	0	0
07:30 AM	0	0	0	0	0	0	0	0	0	0	0	0	0	0	0	0	0	0	0	0	0
07:45 AM	0	0	0	0	0	0	1	0	0	1	0	0	0	0	0	0	1	0	0	1	2
Total	0	0	0	0	0	0	1	0	0	1	0	0	0	0	0	0	1	2	0	3	4
08:00 AM	0	0	0	0	0	0	0	0	0	0	0	0	0	0	0	0	1	0	0	1	1
08:15 AM	0	0	0	0	0	0	0	0	0	0	0	0	0	0	0	0	0	0	0	0	0
08:30 AM	0	0	0	0	0	0	0	0	0	0	1	0	0	0	1	0	1	0	0	1	2
08:45 AM	0	0	0	0	0	0	0	0	0	0	0	0	0	0	0	0	0	0	0	0	0
Total	0	0	0	0	0	0	0	0	0	0	1	0	0	0	1	0	2	0	0	2	3
Grand Total	0	0	0	0	0	0	1	0	0	1	1	0	0	0	1	0	3	2	0	5	7
Apprch %	0	0	0	0		0	100	0	0		100	0	0	0		0	60	40	0		
Total %	0	0	0	0	0	0	14.3	0	0	14.3	14.3	0	0	0	14.3	0	42.9	28.6	0	71.4	

	Grove Avenue Southbound					Foothill Boulevard Westbound					Grove Avenue Northbound					Foothill Boulevard Eastbound					
Start Time	Left	Thru	Right	RoR	App. Total		Thru	Right	RoR	App. Total		Thru	Right	RoR	App. Total		Thru	Right	RoR	App. Total	Int. Total
Peak Hour Analysis From 07:30 AM to 08:15 AM - Peak 1 of 1																					
Peak Hour for Entire Intersection Begins at 07:30 AM																					
07:30 AM	0	0	0	0	0	0	0	0	0	0	0	0	0	0	0	0	0	0	0	0	0
07:45 AM	0	0	0	0	0	0	1	0	0	1	0	0	0	0	0	0	1	0	0	1	2
08:00 AM	0	0	0	0	0	0	0	0	0	0	0	0	0	0	0	0	1	0	0	1	1
08:15 AM	0	0	0	0	0	0	0	0	0	0	0	0	0	0	0	0	0	0	0	0	0
Total Volume	0	0	0	0	0	0	1	0	0	1	0	0	0	0	0	0	2	0	0	2	3
% App. Total	0	0	0	0		0	100	0	0		0	0	0	0		0	100	0	0		
PHF	.000	.000	.000	.000	.000	.000	.250	.000	.000	.250	.000	.000	.000	.000	.000	.000	.500	.000	.000	.500	.375

Counts Unlimited Inc.
25286 Jaclyn Avenue
Moreno Valley, CA 92557
951-485-7934

City of Rancho Cucamonga
N/S: Grove Avenue
E/W: Foothill Boulevard
Weather: Sunny

File Name : RNCGRFOAM
Site Code : 9150083
Start Date : 5/27/2009

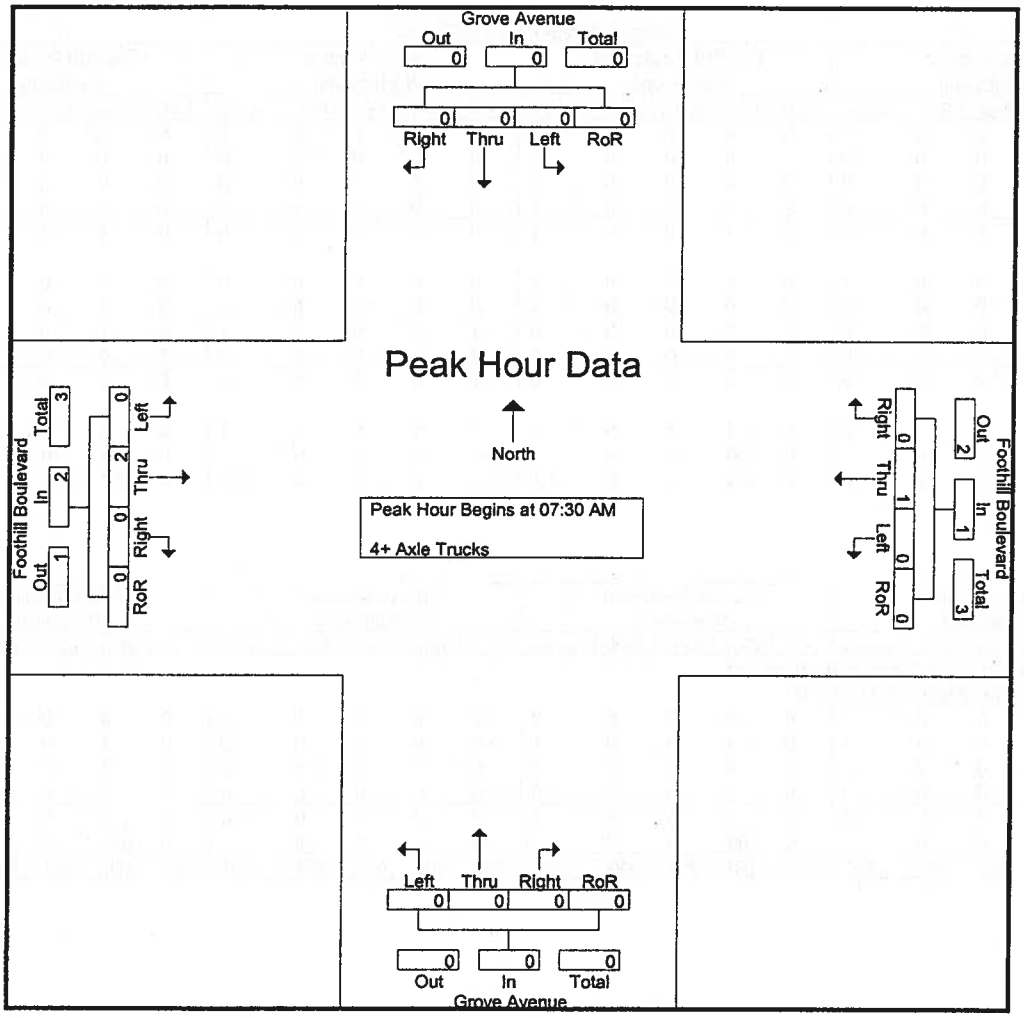

Peak Hour Analysis From 07:30 AM to 08:15 AM - Peak 1 of 1

Peak Hour for Each Approach Begins at:

	07:30 AM					07:30 AM					07:30 AM					07:30 AM				
+0 mins.	0	0	0	0	0	0	0	0	0	0	0	0	0	0	0	0	0	0	0	0
+15 mins.	0	0	0	0	0	0	1	0	0	1	0	0	0	0	0	0	1	0	0	1
+30 mins.	0	0	0	0	0	0	0	0	0	0	0	0	0	0	0	0	1	0	0	1
+45 mins.	0	0	0	0	0	0	0	0	0	0	0	0	0	0	0	0	0	0	0	0
Total Volume	0	0	0	0	0	0	1	0	0	1	0	0	0	0	0	0	2	0	0	2
% App. Total	0	0	0	0		0	100	0	0		0	0	0	0		0	100	0	0	
PHF	.000	.000	.000	.000	.000	.000	.250	.000	.000	.250	.000	.000	.000	.000	.000	.000	.500	.000	.000	.500

Counts Unlimited Inc.
25286 Jaclyn Avenue
Moreno Valley, CA 92557
951-485-7934

City of Rancho Cucamonga
N/S: Grove Avenue
E/W: Foothill Boulevard
Weather: Sunny

File Name : RNCGRFOPM
Site Code : 9150083
Start Date : 5/27/2009
Page No : 1

Groups Printed- Passenger Vehicles - Large 2 Axle Vehicles - 3 Axle Vehicles - 4+ Axle Trucks

	Grove Avenue Southbound					Foothill Boulevard Westbound					Grove Avenue Northbound					Foothill Boulevard Eastbound					
Start Time	Left	Thru	Right	RoR	App. Total	Left	Thru	Right	RoR	App. Total	Left	Thru	Right	RoR	App. Total	Left	Thru	Right	RoR	App. Total	Int. Total
04:00 PM	20	22	0	4	46	17	187	20	10	234	38	31	22	24	115	4	225	30	6	265	660
04:15 PM	24	16	1	1	42	24	109	6	4	143	44	41	17	16	118	3	219	20	17	259	562
04:30 PM	28	31	3	5	67	29	184	20	7	240	55	33	19	19	126	4	249	38	11	302	735
04:45 PM	27	19	1	3	50	16	159	19	7	201	48	31	21	23	123	6	235	26	8	275	649
Total	99	88	5	13	205	86	639	65	28	818	185	136	79	82	482	17	928	114	42	1101	2606
05:00 PM	28	26	2	4	60	28	174	11	4	217	51	35	16	28	130	3	286	25	17	331	738
05:15 PM	27	20	2	2	51	25	172	15	6	218	44	42	25	17	128	4	328	31	7	370	767
05:30 PM	32	24	2	3	61	19	169	15	11	214	42	28	17	19	106	6	296	34	7	343	724
05:45 PM	37	26	0	1	64	20	154	12	4	190	40	35	10	22	107	3	226	22	9	260	621
Total	124	96	6	10	236	92	669	53	25	839	177	140	68	86	471	16	1136	112	40	1304	2850
Grand Total	223	184	11	23	441	178	1308	118	53	1657	362	276	147	168	953	33	2064	226	82	2405	5456
Apprch %	50.6	41.7	2.5	5.2		10.7	78.9	7.1	3.2		38	29	15.4	17.6		1.4	85.8	9.4	3.4		
Total %	4.1	3.4	0.2	0.4	8.1	3.3	24	2.2	1	30.4	6.6	5.1	2.7	3.1	17.5	0.6	37.8	4.1	1.5	44.1	
Passenger Vehicles							1285										2040				
% Passenger Vehicles	99.6	97.8	100	100	98.9	99.4	98.2	99.2	100	98.5	99.4	100	98.6	98.8	99.4	100	98.8	96.9	97.6	98.6	98.7
Large 2 Axle Vehicles																					
% Large 2 Axle Vehicles	0.4	0.5	0	0	0.5	0.6	1.7	0.8	0	1.4	0.6	0	0.7	1.2	0.5	0	1.1	2.2	1.2	1.2	1.1
3 Axle Vehicles	0	3	0	0	3	0	1	0	0	1	0	0	1	0	1	0	1	2	1	4	9
% 3 Axle Vehicles	0	1.6	0	0	0.7	0	0.1	0	0	0.1	0	0	0.7	0	0.1	0	0	0.9	1.2	0.2	0.2
4+ Axle Trucks	0	0	0	0	0	0	0	0	0	0	0	0	0	0	0	0	0	0	0	0	0
% 4+ Axle Trucks																					

	Grove Avenue Southbound					Foothill Boulevard Westbound					Grove Avenue Northbound					Foothill Boulevard Eastbound					
Start Time	Left	Thru	Right	RoR	App. Total	Left	Thru	Right	RoR	App. Total	Left	Thru	Right	RoR	App. Total	Left	Thru	Right	RoR	App. Total	Int. Total
Peak Hour Analysis From 04:00 PM to 05:45 PM - Peak 1 of 1																					
Peak Hour for Entire Intersection Begins at 04:30 PM																					
04:30 PM	**28**	**31**	**3**	**5**	**67**	29	**184**	**20**	**7**	**240**	**55**	33	19	19	126	4	249	**38**	11	302	735
04:45 PM	27	19	1	3	50	16	159	19	7	201	48	31	21	23	123	**6**	235	26	8	275	649
05:00 PM	28	26	2	4	60	28	174	11	4	217	51	35	16	**28**	**130**	3	286	25	**17**	331	738
05:15 PM	27	20	2	2	51	25	172	15	6	218	44	**42**	**25**	17	128	4	**328**	31	7	370	**767**
Total Volume	110	96	8	14	228	98	689	65	24	876	198	141	81	87	507	17	1098	120	43	1278	2889
% App. Total	48.2	42.1	3.5	6.1		11.2	78.7	7.4	2.7		39.1	27.8	16	17.2		1.3	85.9	9.4	3.4		
PHF	.982	.774	.667	.700	.851	.845	.936	.813	.857	.913	.900	.839	.810	.777	.975	.708	.837	.789	.632	.864	.942

Counts Unlimited Inc.
25286 Jaclyn Avenue
Moreno Valley, CA 92557
951-485-7934

City of Rancho Cucamonga
N/S: Grove Avenue
E/W: Foothill Boulevard
Weather: Sunny

File Name : RNCGRFOPM
Site Code : 9150083
Start Date : 5/27/2009
Page No : 2

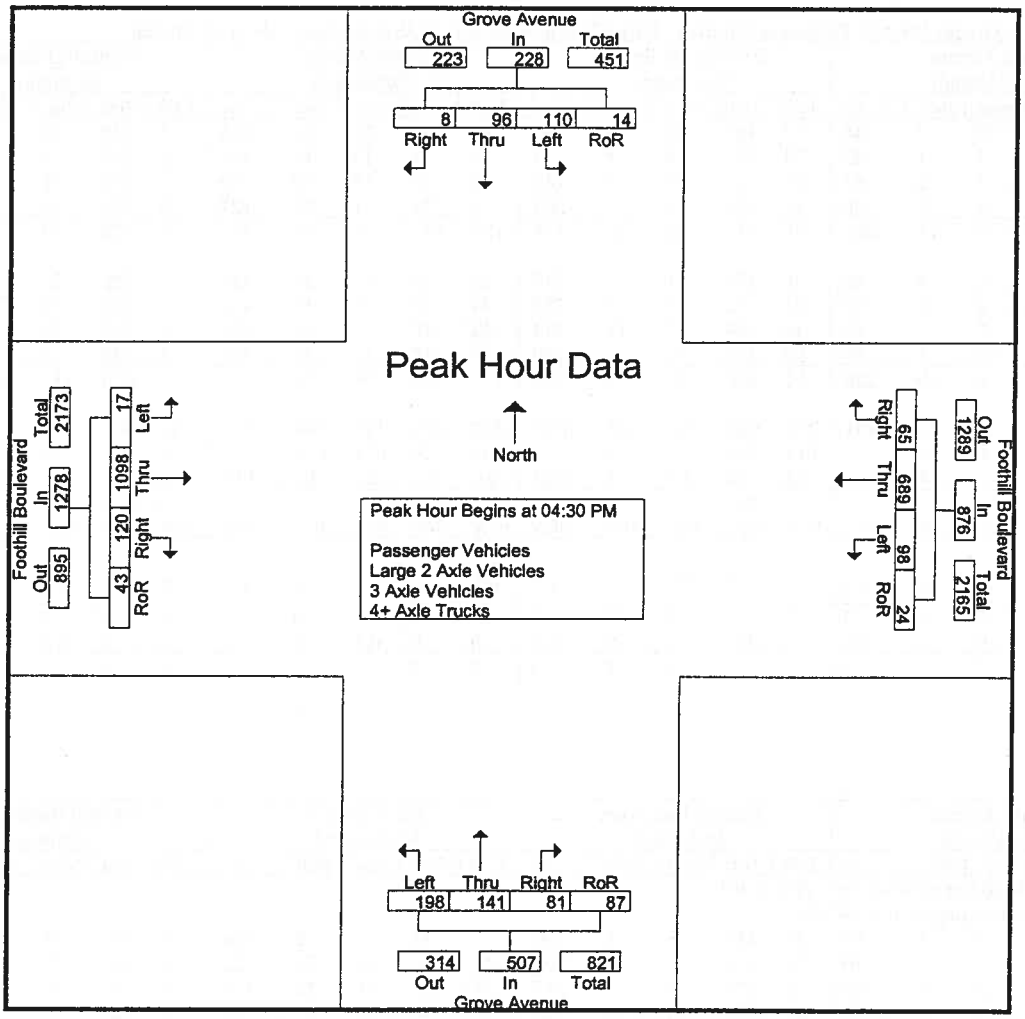

Peak Hour Analysis From 04:00 PM to 05:45 PM - Peak 1 of 1

Peak Hour for Each Approach Begins at:

	05:00 PM					04:30 PM					04:30 PM					04:45 PM				
+0 mins.	28	26	2	4	60	29	184	20	7	240	55	33	19	19	126	6	235	26	8	275
+15 mins.	27	20	2	2	51	16	159	19	7	201	48	31	21	23	123	3	286	25	17	331
+30 mins.	32	24	2	3	61	28	174	11	4	217	51	35	16	28	130	4	328	31	7	370
+45 mins.	37	26	0	1	64	25	172	15	6	218	44	42	25	17	128	6	296	34	7	343
Total Volume	124	96	6	10	236	98	689	65	24	876	198	141	81	87	507	19	1145	116	39	1319
% App. Total	52.5	40.7	2.5	4.2		11.2	78.7	7.4	2.7		39.1	27.8	16	17.2		1.4	86.8	8.8	3	
PHF	.838	.923	.750	.625	.922	.845	.936	.813	.857	.913	.900	.839	.810	.777	.975	.792	.873	.853	.574	.891

Counts Unlimited Inc.
25286 Jaclyn Avenue
Moreno Valley, CA 92557
951-485-7934

City of Rancho Cucamonga
N/S: Grove Avenue
E/W: Foothill Boulevard
Weather: Sunny

File Name : RNCGRFOPM
Site Code : 9150083
Start Date : 5/27/2009
Page No : 1

Groups Printed- Passenger Vehicles

	Grove Avenue Southbound					Foothill Boulevard Westbound					Grove Avenue Northbound					Foothill Boulevard Eastbound					
Start Time	Left	Thru	Right	RoR	App. Total	Left	Thru	Right	RoR	App. Total	Left	Thru	Right	RoR	App. Total	Left	Thru	Right	RoR	App. Total	Int. Total
04:00 PM	20	21	0	4	45	16	181	19	10	226	38	31	22	24	115	4	221	27	6	258	644
04:15 PM	24	14	1	1	40	24	106	6	4	140	44	41	17	16	118	3	216	18	16	253	551
04:30 PM	27	30	3	5	65	29	181	20	7	237	53	33	19	18	123	4	248	38	10	300	725
04:45 PM	27	19	1	3	50	16	158	19	7	200	48	31	21	23	123	6	230	26	8	270	643
Total	98	84	5	13	200	85	626	64	28	803	183	136	79	81	479	17	915	109	40	1081	2563
05:00 PM	28	26	2	4	60	28	173	11	4	216	51	35	16	27	129	3	284	24	17	328	733
05:15 PM	27	20	2	2	51	25	170	15	6	216	44	42	24	17	127	4	325	31	7	367	761
05:30 PM	32	24	2	3	61	19	165	15	11	210	42	28	16	19	105	6	294	33	7	340	716
05:45 PM	37	26	0	1	64	20	151	12	4	187	40	35	10	22	107	3	222	22	9	256	614
Total	124	96	6	10	236	92	659	53	25	829	177	140	66	85	468	16	1125	110	40	1291	2824
Grand Total	222	180	11	23	436	177	1285	117	53	1632	360	276	145	166	947	33	2040	219	80	2372	5387
Apprch %	50.9	41.3	2.5	5.3		10.8	78.7	7.2	3.2		38	29.1	15.3	17.5		1.4	86	9.2	3.4		
Total %	4.1	3.3	0.2	0.4	8.1	3.3	23.9	2.2	1	30.3	6.7	5.1	2.7	3.1	17.6	0.6	37.9	4.1	1.5	44	

	Grove Avenue Southbound					Foothill Boulevard Westbound					Grove Avenue Northbound					Foothill Boulevard Eastbound					
Start Time	Left	Thru	Right	RoR	App. Total		Thru	Right	RoR	App. Total		Thru	Right	RoR	App. Total		Thru	Right	RoR	App. Total	Int. Total
Peak Hour Analysis From 04:30 PM to 05:15 PM - Peak 1 of 1																					
Peak Hour for Entire Intersection Begins at 04:30 PM																					
04:30 PM	27	**30**	**3**	**5**	**65**	**29**	**181**	**20**	7	**237**	**53**	33	19	18	123	4	248	**38**	10	300	725
04:45 PM	27	19	1	3	50	16	158	19	7	200	48	31	21	23	123	**6**	230	26	8	270	643
05:00 PM	**28**	26	2	4	60	28	173	11	4	216	51	35	16	**27**	**129**	3	284	24	**17**	328	733
05:15 PM	27	20	2	2	51	25	170	15	6	216	44	**42**	**24**	17	127	4	**325**	31	7	**367**	**761**
Total Volume	109	95	8	14	226	98	682	65	24	869	196	141	80	85	502	17	1087	119	42	1265	2862
% App. Total	48.2	42	3.5	6.2		11.3	78.5	7.5	2.8		39	28.1	15.9	16.9		1.3	85.9	9.4	3.3		
PHF	.973	.792	.667	.700	.869	.845	.942	.813	.857	.917	.925	.839	.833	.787	.973	.708	.836	.783	.618	.862	.940

Counts Unlimited Inc.
25286 Jaclyn Avenue
Moreno Valley, CA 92557
951-485-7934

City of Rancho Cucamonga
N/S: Grove Avenue
E/W: Foothill Boulevard
Weather: Sunny

File Name : RNCGRFOPM
Site Code : 9150083
Start Date : 5/27/2009
Page No : 2

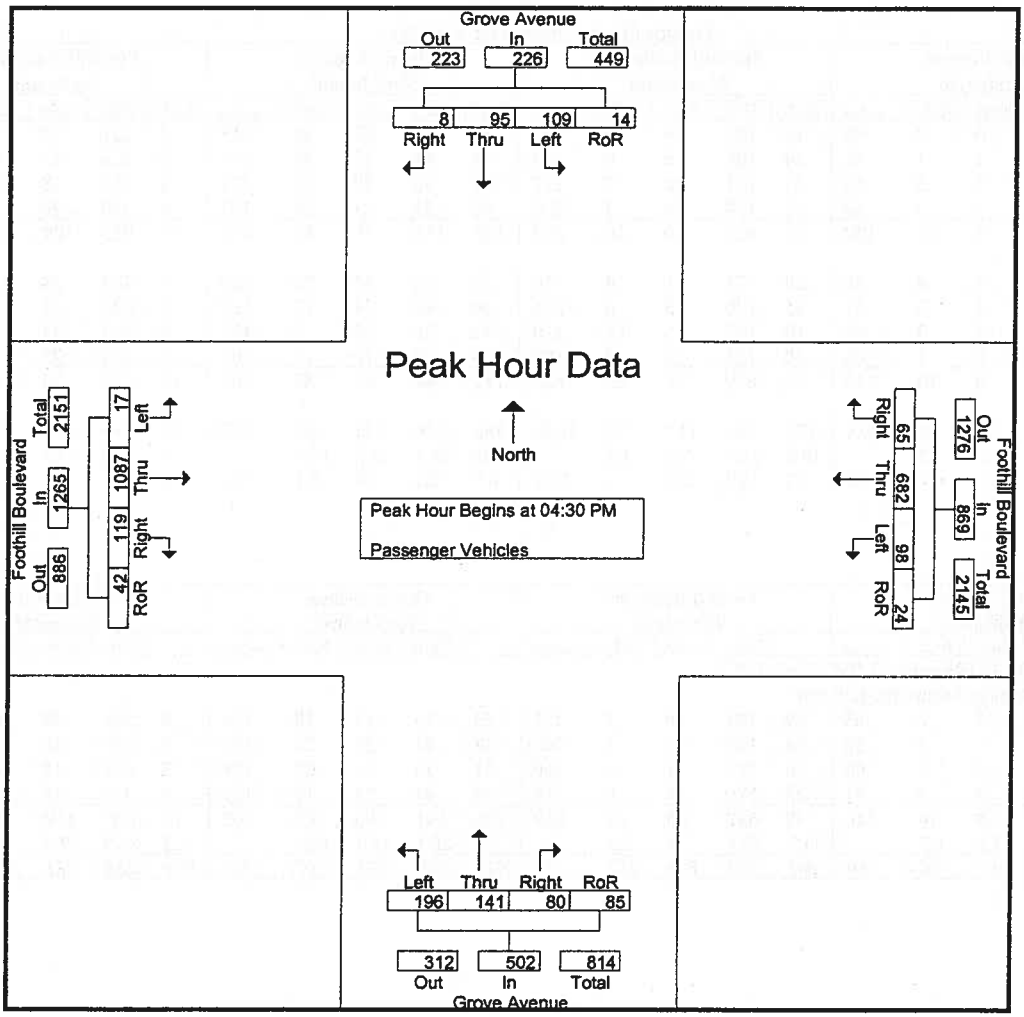

Peak Hour Analysis From 04:30 PM to 05:15 PM - Peak 1 of 1

Peak Hour for Each Approach Begins at:

	04:30 PM					04:30 PM					04:30 PM					04:30 PM				
+0 mins.	27	**30**	**3**	**5**	**65**	**29**	**181**	**20**	**7**	**237**	**53**	33	19	18	123	4	248	**38**	10	300
+15 mins.	27	19	1	3	50	16	158	19	7	200	48	31	21	23	123	**6**	230	26	8	270
+30 mins.	**28**	26	2	4	60	28	173	11	4	216	51	35	16	**27**	**129**	3	284	24	**17**	328
+45 mins.	27	20	2	2	51	25	170	15	6	216	44	**42**	**24**	17	127	4	**325**	31	7	**367**
Total Volume	109	95	8	14	226	98	682	65	24	869	196	141	80	85	502	17	1087	119	42	1265
% App. Total	48.2	42	3.5	6.2		11.3	78.5	7.5	2.8		39	28.1	15.9	16.9		1.3	85.9	9.4	3.3	
PHF	.973	.792	.667	.700	.869	.845	.942	.813	.857	.917	.925	.839	.833	.787	.973	.708	.836	.783	.618	.862

Counts Unlimited Inc.
25286 Jaclyn Avenue
Moreno Valley, CA 92557
951-485-7934

City of Rancho Cucamonga
N/S: Grove Avenue
E/W: Foothill Boulevard
Weather: Sunny

File Name : RNCGRFOPM
Site Code : 9150083
Start Date : 5/27/2009
Page No : 1

Groups Printed- Large 2 Axle Vehicles

	Grove Avenue Southbound					Foothill Boulevard Westbound					Grove Avenue Northbound					Foothill Boulevard Eastbound					
Start Time	Left	Thru	Right	RoR	App. Total	Left	Thru	Right	RoR	App. Total	Left	Thru	Right	RoR	App. Total	Left	Thru	Right	RoR	App. Total	Int. Total
04:00 PM	0	0	0	0	0	1	6	1	0	8	0	0	0	0	0	0	4	3	0	7	15
04:15 PM	0	0	0	0	0	0	3	0	0	3	0	0	0	0	0	0	2	0	0	2	5
04:30 PM	1	1	0	0	2	0	3	0	0	3	2	0	0	1	3	0	1	0	1	2	10
04:45 PM	0	0	0	0	0	0	1	0	0	1	0	0	0	0	0	0	5	0	0	5	6
Total	1	1	0	0	2	1	13	1	0	15	2	0	0	1	3	0	12	3	1	16	36
05:00 PM	0	0	0	0	0	0	1	0	0	1	0	0	0	1	1	0	2	1	0	3	5
05:15 PM	0	0	0	0	0	0	2	0	0	2	0	0	1	0	1	0	3	0	0	3	6
05:30 PM	0	0	0	0	0	0	4	0	0	4	0	0	0	0	0	0	2	1	0	3	7
05:45 PM	0	0	0	0	0	0	2	0	0	2	0	0	0	0	0	0	4	0	0	4	6
Total	0	0	0	0	0	0	9	0	0	9	0	0	1	1	2	0	11	2	0	13	24
Grand Total	1	1	0	0	2	1	22	1	0	24	2	0	1	2	5	0	23	5	1	29	60
Apprch %	50	50	0	0		4.2	91.7	4.2	0		40	0	20	40		0	79.3	17.2	3.4		
Total %	1.7	1.7	0	0	3.3	1.7	36.7	1.7	0	40	3.3	0	1.7	3.3	8.3	0	38.3	8.3	1.7	48.3	

	Grove Avenue Southbound					Foothill Boulevard Westbound					Grove Avenue Northbound					Foothill Boulevard Eastbound					
Start Time	Left	Thru	Right	RoR	App. Total		Thru	Right	RoR	App. Total		Thru	Right	RoR	App. Total		Thru	Right	RoR	App. Total	Int. Total
Peak Hour Analysis From 04:30 PM to 05:15 PM - Peak 1 of 1																					
Peak Hour for Entire Intersection Begins at 04:30 PM																					
04:30 PM	1	1	0	0	2	0	3	0	0	3	2	0	0	1	3	0	1	0	1	2	10
04:45 PM	0	0	0	0	0	0	1	0	0	1	0	0	0	0	0	0	5	0	0	5	6
05:00 PM	0	0	0	0	0	0	1	0	0	1	0	0	0	1	1	0	2	1	0	3	5
05:15 PM	0	0	0	0	0	0	2	0	0	2	0	0	1	0	1	0	3	0	0	3	6
Total Volume	1	1	0	0	2	0	7	0	0	7	2	0	1	2	5	0	11	1	1	13	27
% App. Total	50	50	0	0		0	100	0	0		40	0	20	40		0	84.6	7.7	7.7		
PHF	.250	.250	.000	.000	.250	.000	.583	.000	.000	.583	.250	.000	.250	.500	.417	.000	.550	.250	.250	.650	.675

Counts Unlimited Inc.
25286 Jaclyn Avenue
Moreno Valley, CA 92557
951-485-7934

City of Rancho Cucamonga
N/S: Grove Avenue
E/W: Foothill Boulevard
Weather: Sunny

File Name : RNCGRFOPM
Site Code : 9150083
Start Date : 5/27/2009
Page No : 2

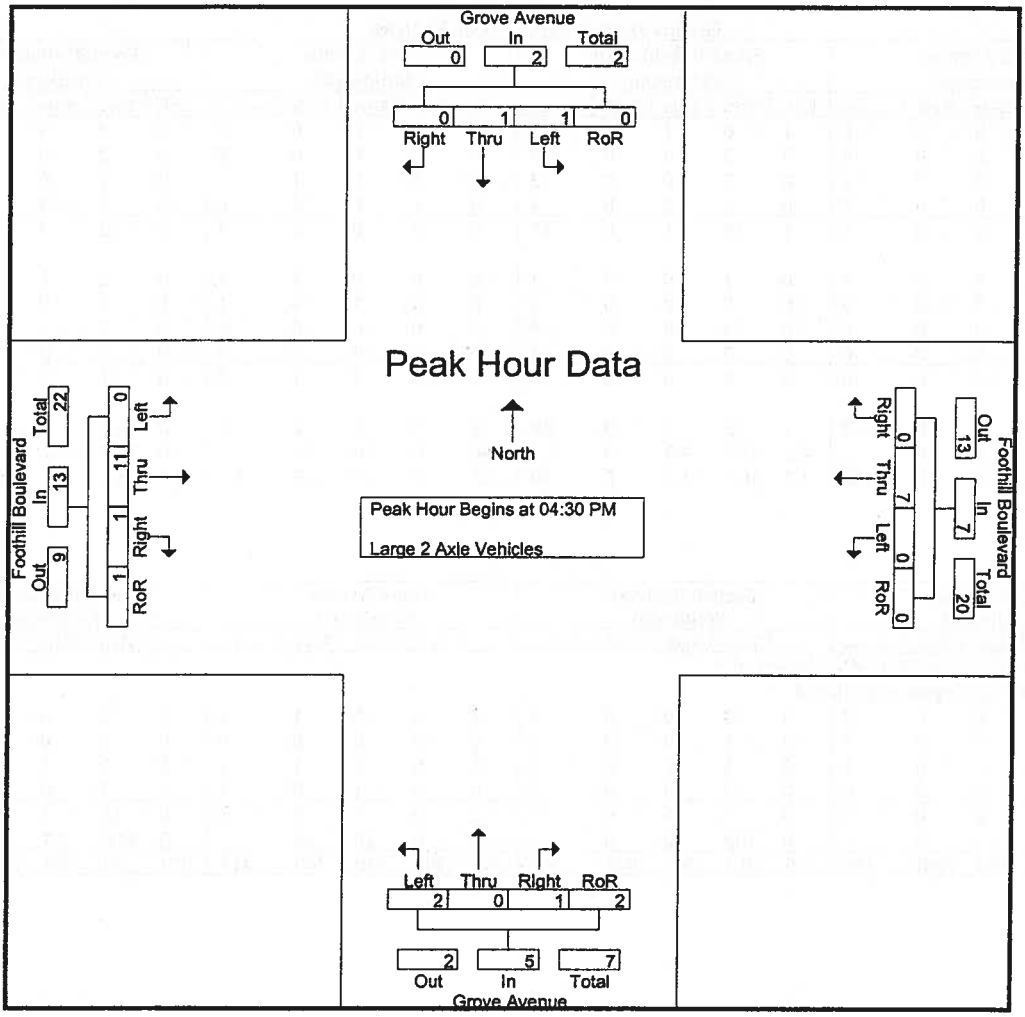

Peak Hour Analysis From 04:30 PM to 05:15 PM - Peak 1 of 1

Peak Hour for Each Approach Begins at:

	04:30 PM					04:30 PM					04:30 PM					04:30 PM				
+0 mins.	1	1	0	0	2	0	3	0	0	3	2	0	0	1	3	0	1	0	1	2
+15 mins.	0	0	0	0	0	0	1	0	0	1	0	0	0	0	0	0	5	0	0	5
+30 mins.	0	0	0	0	0	0	1	0	0	1	0	0	0	1	1	0	2	1	0	3
+45 mins.	0	0	0	0	0	0	2	0	0	2	0	0	1	0	1	0	3	0	0	3
Total Volume	1	1	0	0	2	0	7	0	0	7	2	0	1	2	5	0	11	1	1	13
% App. Total	50	50	0	0		0	100	0	0		40	0	20	40		0	84.6	7.7	7.7	
PHF	.250	.250	.000	.000	.250	.000	.583	.000	.000	.583	.250	.000	.250	.500	.417	.000	.550	.250	.250	.650

Counts Unlimited Inc.
25286 Jaclyn Avenue
Moreno Valley, CA 92557
951-485-7934

City of Rancho Cucamonga
N/S: Grove Avenue
E/W: Foothill Boulevard
Weather: Sunny

File Name : RNCGRFOPM
Site Code : 9150083
Start Date : 5/27/2009
Page No : 1

Groups Printed- 3 Axle Vehicles

	Grove Avenue Southbound					Foothill Boulevard Westbound					Grove Avenue Northbound					Foothill Boulevard Eastbound					
Start Time	Left	Thru	Right	RoR	App. Total	Left	Thru	Right	RoR	App. Total	Left	Thru	Right	RoR	App. Total	Left	Thru	Right	RoR	App. Total	Int. Total
04:00 PM	0	1	0	0	1	0	0	0	0	0	0	0	0	0	0	0	0	0	0	0	1
04:15 PM	0	2	0	0	2	0	0	0	0	0	0	0	0	0	0	0	1	2	1	4	6
04:30 PM	0	0	0	0	0	0	0	0	0	0	0	0	0	0	0	0	0	0	0	0	0
04:45 PM	0	0	0	0	0	0	0	0	0	0	0	0	0	0	0	0	0	0	0	0	0
Total	0	3	0	0	3	0	0	0	0	0	0	0	0	0	0	0	1	2	1	4	7
05:00 PM	0	0	0	0	0	0	0	0	0	0	0	0	0	0	0	0	0	0	0	0	0
05:15 PM	0	0	0	0	0	0	0	0	0	0	0	0	0	0	0	0	0	0	0	0	0
05:30 PM	0	0	0	0	0	0	0	0	0	0	0	0	1	0	1	0	0	0	0	0	1
05:45 PM	0	0	0	0	0	0	1	0	0	1	0	0	0	0	0	0	0	0	0	0	1
Total	0	0	0	0	0	0	1	0	0	1	0	0	1	0	1	0	0	0	0	0	2
Grand Total	0	3	0	0	3	0	1	0	0	1	0	0	1	0	1	0	1	2	1	4	9
Apprch %	0	100	0	0		0	100	0	0		0	0	100	0		0	25	50	25		
Total %	0	33.3	0	0	33.3	0	11.1	0	0	11.1	0	0	11.1	0	11.1	0	11.1	22.2	11.1	44.4	

	Grove Avenue Southbound					Foothill Boulevard Westbound					Grove Avenue Northbound					Foothill Boulevard Eastbound					
Start Time	Left	Thru	Right	RoR	App. Total		Thru	Right	RoR	App. Total		Thru	Right	RoR	App. Total		Thru	Right	RoR	App. Total	Int. Total
Peak Hour Analysis From 04:30 PM to 05:15 PM - Peak 1 of 1																					
Peak Hour for Entire Intersection Begins at 04:30 PM																					
04:30 PM	0	0	0	0	0	0	0	0	0	0	0	0	0	0	0	0	0	0	0	0	0
04:45 PM	0	0	0	0	0	0	0	0	0	0	0	0	0	0	0	0	0	0	0	0	0
05:00 PM	0	0	0	0	0	0	0	0	0	0	0	0	0	0	0	0	0	0	0	0	0
05:15 PM	0	0	0	0	0	0	0	0	0	0	0	0	0	0	0	0	0	0	0	0	0
Total Volume	0	0	0	0	0	0	0	0	0	0	0	0	0	0	0	0	0	0	0	0	0
% App. Total	0	0	0	0		0	0	0	0		0	0	0	0		0	0	0	0		
PHF	.000	.000	.000	.000	.000	.000	.000	.000	.000	.000	.000	.000	.000	.000	.000	.000	.000	.000	.000	.000	.000

Counts Unlimited Inc.
25286 Jaclyn Avenue
Moreno Valley, CA 92557
951-485-7934

City of Rancho Cucamonga
N/S: Grove Avenue
E/W: Foothill Boulevard
Weather: Sunny

File Name : RNCGRFOPM
Site Code : 9150083
Start Date : 5/27/2009
Page No : 2

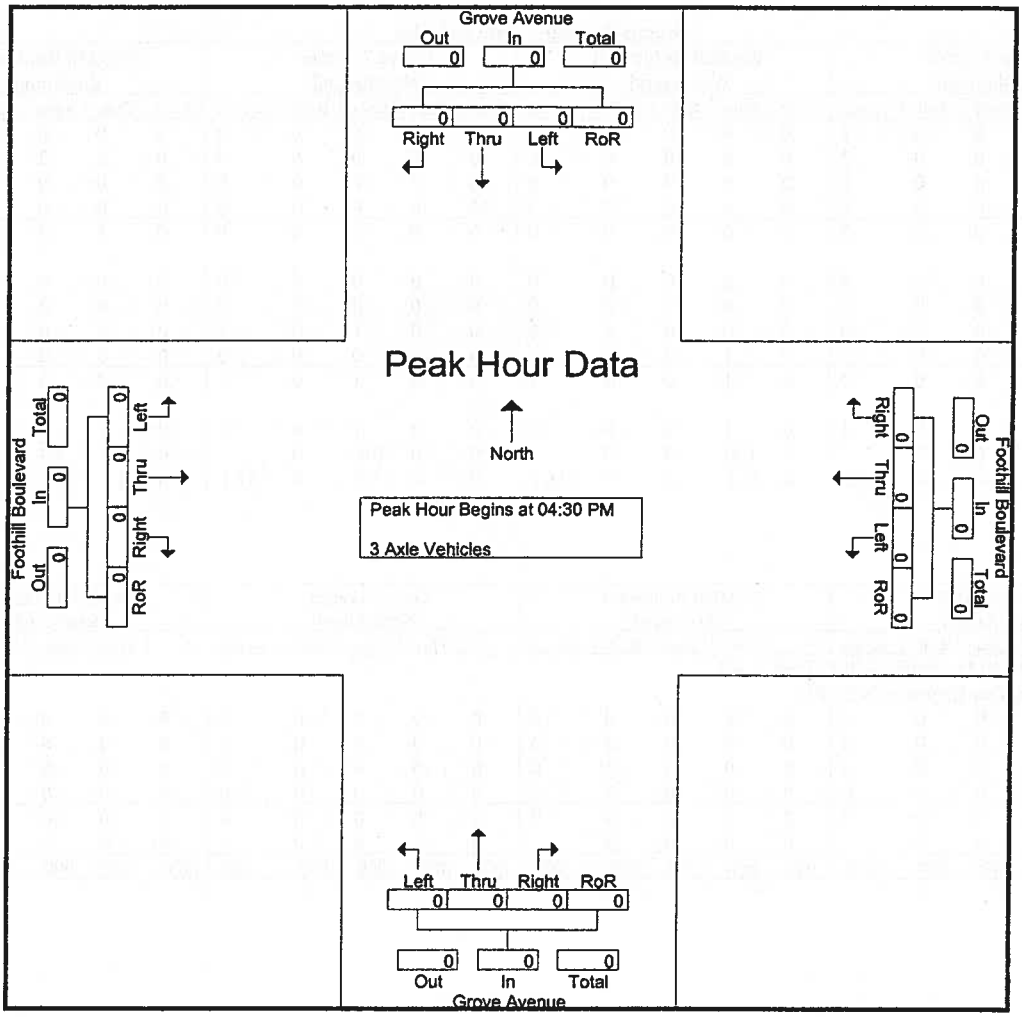

Peak Hour Analysis From 04:30 PM to 05:15 PM - Peak 1 of 1

Peak Hour for Each Approach Begins at:

	04:30 PM					04:30 PM					04:30 PM					04:30 PM				
+0 mins.	0	0	0	0	0	0	0	0	0	0	0	0	0	0	0	0	0	0	0	0
+15 mins.	0	0	0	0	0	0	0	0	0	0	0	0	0	0	0	0	0	0	0	0
+30 mins.	0	0	0	0	0	0	0	0	0	0	0	0	0	0	0	0	0	0	0	0
+45 mins.	0	0	0	0	0	0	0	0	0	0	0	0	0	0	0	0	0	0	0	0
Total Volume	0	0	0	0	0	0	0	0	0	0	0	0	0	0	0	0	0	0	0	0
% App. Total	0	0	0	0		0	0	0	0		0	0	0	0		0	0	0	0	
PHF	.000	.000	.000	.000	.000	.000	.000	.000	.000	.000	.000	.000	.000	.000	.000	.000	.000	.000	.000	.000

Counts Unlimited Inc.
25286 Jaclyn Avenue
Moreno Valley, CA 92557
951-485-7934

City of Rancho Cucamonga
N/S: Grove Avenue
E/W: Foothill Boulevard
Weather: Sunny

File Name : RNCGRFOPM
Site Code : 9150083
Start Date : 5/27/2009
Page No : 1

Groups Printed- 4+ Axle Trucks

	Grove Avenue Southbound					Foothill Boulevard Westbound					Grove Avenue Northbound					Foothill Boulevard Eastbound					
Start Time	Left	Thru	Right	RoR	App. Total	Left	Thru	Right	RoR	App. Total	Left	Thru	Right	RoR	App. Total	Left	Thru	Right	RoR	App. Total	Int. Total
04:00 PM	0	0	0	0	0	0	0	0	0	0	0	0	0	0	0	0	0	0	0	0	0
04:15 PM	0	0	0	0	0	0	0	0	0	0	0	0	0	0	0	0	0	0	0	0	0
04:30 PM	0	0	0	0	0	0	0	0	0	0	0	0	0	0	0	0	0	0	0	0	0
04:45 PM	0	0	0	0	0	0	0	0	0	0	0	0	0	0	0	0	0	0	0	0	0
Total	0	0	0	0	0	0	0	0	0	0	0	0	0	0	0	0	0	0	0	0	0
05:00 PM	0	0	0	0	0	0	0	0	0	0	0	0	0	0	0	0	0	0	0	0	0
05:15 PM	0	0	0	0	0	0	0	0	0	0	0	0	0	0	0	0	0	0	0	0	0
05:30 PM	0	0	0	0	0	0	0	0	0	0	0	0	0	0	0	0	0	0	0	0	0
05:45 PM	0	0	0	0	0	0	0	0	0	0	0	0	0	0	0	0	0	0	0	0	0
Total	0	0	0	0	0	0	0	0	0	0	0	0	0	0	0	0	0	0	0	0	0
Grand Total	0	0	0	0	0	0	0	0	0	0	0	0	0	0	0	0	0	0	0	0	0
Apprch %	0	0	0	0		0	0	0	0		0	0	0	0		0	0	0	0		
Total %																					

	Grove Avenue Southbound					Foothill Boulevard Westbound					Grove Avenue Northbound					Foothill Boulevard Eastbound					
Start Time	Left	Thru	Right	RoR	App. Total	Left	Thru	Right	RoR	App. Total	Left	Thru	Right	RoR	App. Total	Left	Thru	Right	RoR	App. Total	Int. Total
Peak Hour Analysis From 04:30 PM to 05:15 PM - Peak 1 of 1																					
Peak Hour for Entire Intersection Begins at 04:30 PM																					
04:30 PM	0	0	0	0	0	0	0	0	0	0	0	0	0	0	0	0	0	0	0	0	0
04:45 PM	0	0	0	0	0	0	0	0	0	0	0	0	0	0	0	0	0	0	0	0	0
05:00 PM	0	0	0	0	0	0	0	0	0	0	0	0	0	0	0	0	0	0	0	0	0
05:15 PM	0	0	0	0	0	0	0	0	0	0	0	0	0	0	0	0	0	0	0	0	0
Total Volume	0	0	0	0	0	0	0	0	0	0	0	0	0	0	0	0	0	0	0	0	0
% App. Total	0	0	0	0		0	0	0	0		0	0	0	0		0	0	0	0		
PHF	.000	.000	.000	.000	.000	.000	.000	.000	.000	.000	.000	.000	.000	.000	.000	.000	.000	.000	.000	.000	.000

Counts Unlimited Inc.
25286 Jaclyn Avenue
Moreno Valley, CA 92557
951-485-7934

City of Rancho Cucamonga
N/S: Grove Avenue
E/W: Foothill Boulevard
Weather: Sunny

File Name : RNCGRFOPM
Site Code : 9150083
Start Date : 5/27/2009
Page No : 2

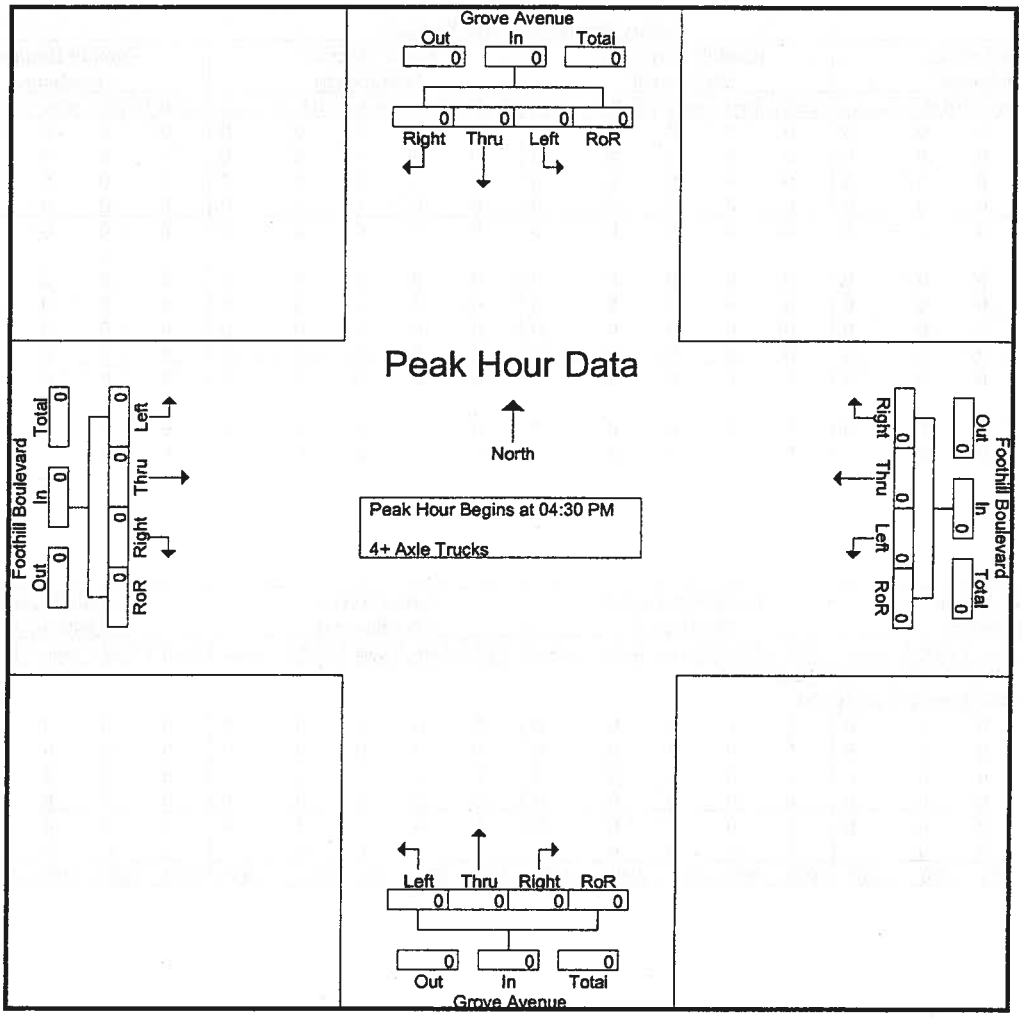

Peak Hour Analysis From 04:30 PM to 05:15 PM - Peak 1 of 1

Peak Hour for Each Approach Begins at:

	04:30 PM					04:30 PM					04:30 PM					04:30 PM				
+0 mins.	0	0	0	0	0	0	0	0	0	0	0	0	0	0	0	0	0	0	0	0
+15 mins.	0	0	0	0	0	0	0	0	0	0	0	0	0	0	0	0	0	0	0	0
+30 mins.	0	0	0	0	0	0	0	0	0	0	0	0	0	0	0	0	0	0	0	0
+45 mins.	0	0	0	0	0	0	0	0	0	0	0	0	0	0	0	0	0	0	0	0
Total Volume	0	0	0	0	0	0	0	0	0	0	0	0	0	0	0	0	0	0	0	0
% App. Total	0	0	0	0		0	0	0	0		0	0	0	0		0	0	0	0	
PHF	.000	.000	.000	.000	.000	.000	.000	.000	.000	.000	.000	.000	.000	.000	.000	.000	.000	.000	.000	.000

PASSENGER CAR EQUIVALENCY PEAK HOUR COUNT SUMMARY

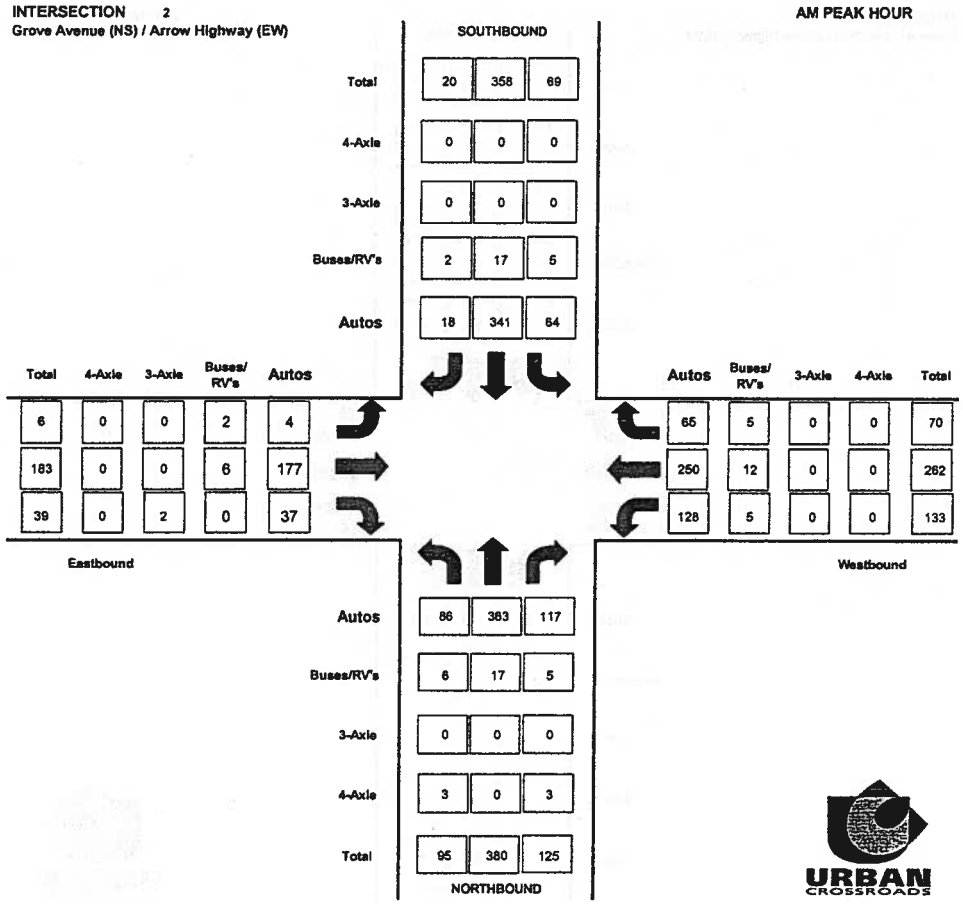

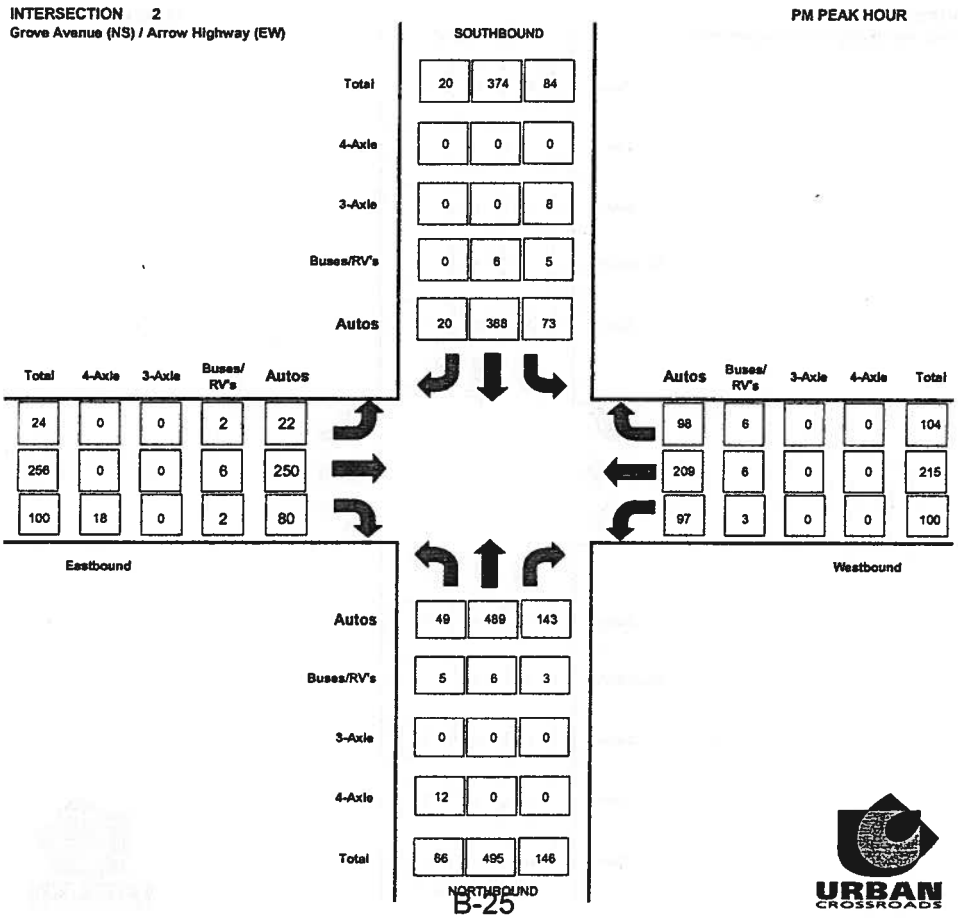

RAW PEAK HOUR COUNT SUMMARY

INTERSECTION 2
Grove Avenue (NS) / Arrow Highway (EW)

AM PEAK HOUR

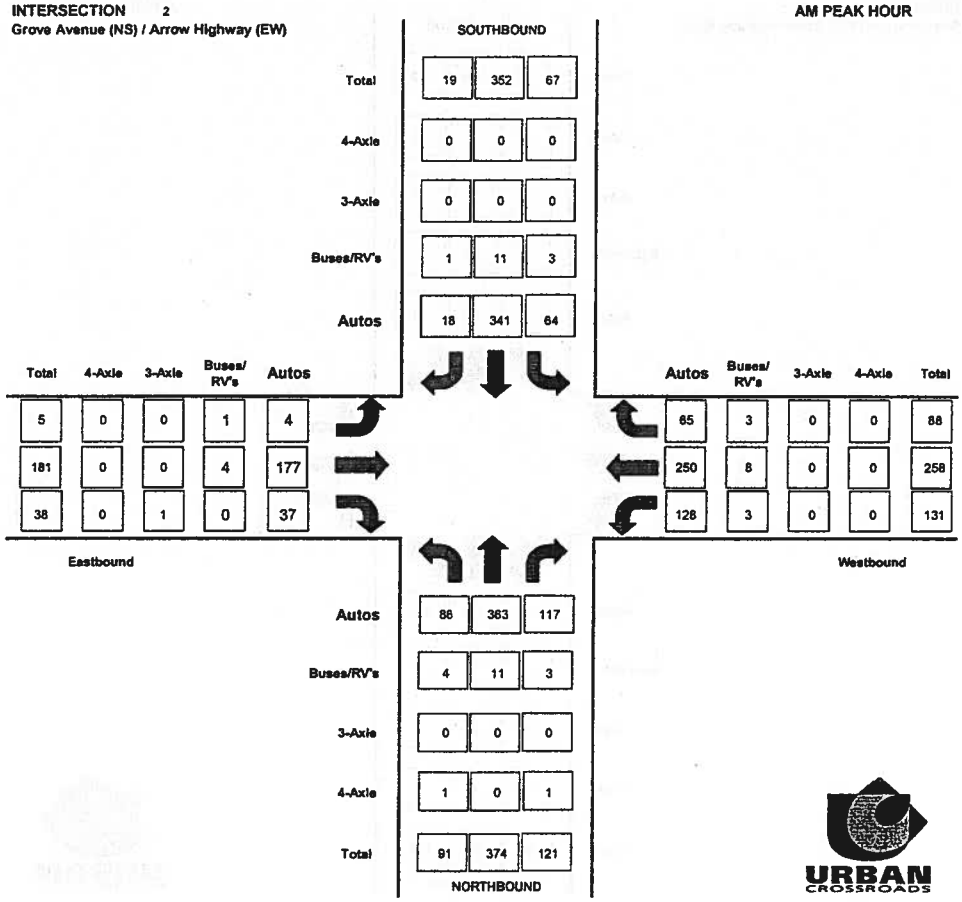

INTERSECTION 2
Grove Avenue (NS) / Arrow Highway (EW)

PM PEAK HOUR

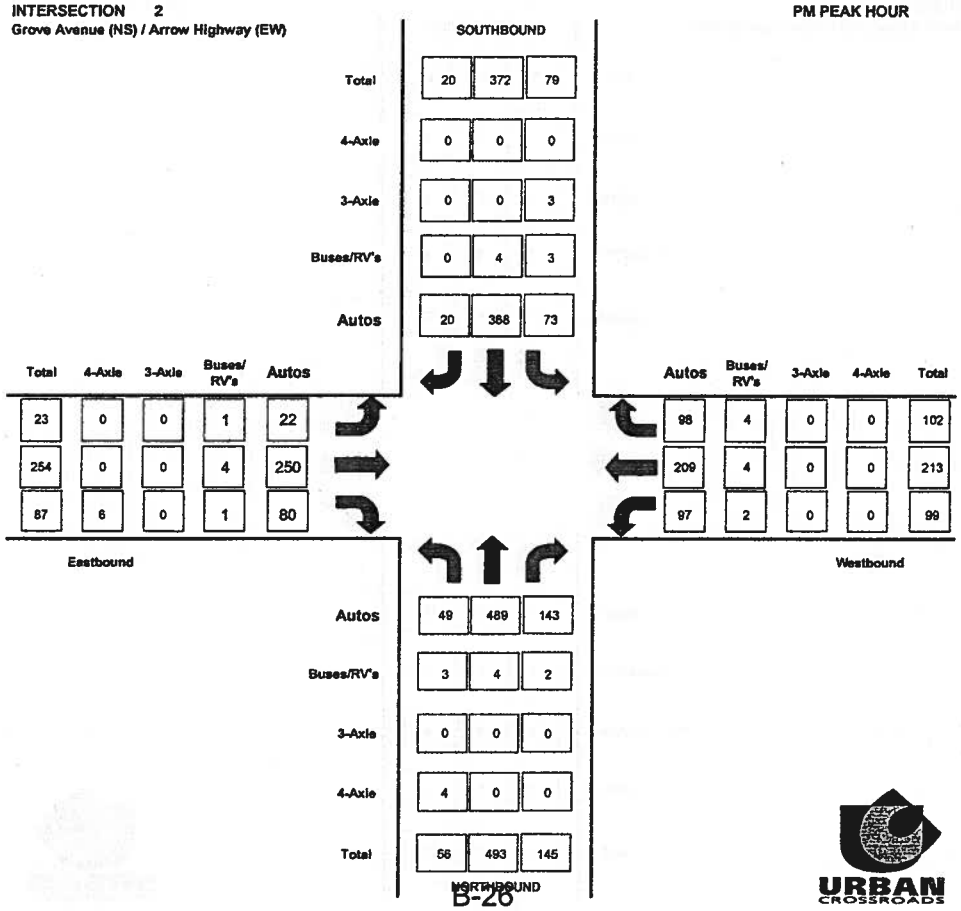

Counts Unlimited Inc.
25286 Jaclyn Avenue
Moreno Valley, CA 92557
951-485-7934

City of Rancho Cucamonga
N/S: Grove Avenue
E/W: Arrow Highway
Weather: Sunny

File Name : RNCGRARAM
Site Code : 9150097
Start Date : 5/27/2009
Page No : 1

Groups Printed- Passenger Vehicles - Large 2 Axle Vehicles - 3 Axle Vehicles - 4+ Axle Trucks

	Grove Avenue Southbound					Arrow Highway Westbound					Grove Avenue Northbound					Arrow Highway Eastbound					
Start Time	Left	Thru	Right	RoR	App. Total	Left	Thru	Right	RoR	App. Total	Left	Thru	Right	RoR	App. Total	Left	Thru	Right	RoR	App. Total	Int. Total
07:00 AM	7	75	1	0	83	24	46	8	5	83	16	65	15	4	100	3	22	4	2	31	297
07:15 AM	11	94	0	0	105	25	58	6	2	91	16	80	12	7	115	1	27	3	3	34	345
07:30 AM	14	112	2	0	128	40	56	14	6	116	23	85	17	12	137	2	42	8	4	56	437
07:45 AM	18	99	6	0	123	45	88	12	1	146	29	92	20	17	158	1	55	13	0	69	496
Total	50	380	9	0	439	134	248	40	14	436	84	322	64	40	510	7	146	28	9	190	1575
08:00 AM	17	73	4	1	95	17	54	12	3	86	14	102	23	10	149	2	37	6	0	45	375
08:15 AM	18	68	6	0	92	29	60	15	5	109	25	95	14	8	142	0	47	5	2	54	397
08:30 AM	13	80	5	0	98	17	45	14	4	80	20	82	19	6	127	5	40	11	3	59	364
08:45 AM	11	60	6	0	77	19	67	17	5	108	11	94	4	4	113	1	28	7	4	40	338
Total	59	281	21	1	362	82	226	58	17	383	70	373	60	28	531	8	152	29	9	198	1474
Grand Total	109	661	30	1	801	216	474	98	31	819	154	695	124	68	1041	15	298	57	18	388	3049
Apprch %	13.6	82.5	3.7	0.1		26.4	57.9	12	3.8		14.8	66.8	11.9	6.5		3.9	76.8	14.7	4.6		
Total %	3.6	21.7	1	0	26.3	7.1	15.5	3.2	1	26.9	5.1	22.8	4.1	2.2	34.1	0.5	9.8	1.9	0.6	12.7	
Passenger Vehicles																					
% Passenger Vehicles	95.4	96.1	86.7	100	95.6	96.8	96	91.8	93.5	95.6	96.1	96.5	94.4	95.6	96.2	73.3	97	91.2	88.9	94.8	95.7
Large 2 Axle Vehicles																					
% Large 2 Axle Vehicles	4.6	3.3	13.3	0	3.9	3.2	4	6.1	6.5	4.2	2.6	3.3	4.8	4.4	3.5	26.7	2.7	3.5	11.1	4.1	3.8
3 Axle Vehicles																					
% 3 Axle Vehicles	0	0.2	0	0	0.1	0	0	1	0	0.1	0	0.1	0	0	0.1	0	0.3	1.8	0	0.5	0.2
4+ Axle Trucks	0	3	0	0	3	0	0	1	0	1	2	0	1	0	3	0	0	2	0	2	9
% 4+ Axle Trucks																					

	Grove Avenue Southbound					Arrow Highway Westbound					Grove Avenue Northbound					Arrow Highway Eastbound					
Start Time	Left	Thru	Right	RoR	App. Total	Left	Thru	Right	RoR	App. Total	Left	Thru	Right	RoR	App. Total	Left	Thru	Right	RoR	App. Total	Int. Total
Peak Hour Analysis From 07:00 AM to 08:45 AM - Peak 1 of 1																					
Peak Hour for Entire Intersection Begins at 07:30 AM																					
07:30 AM	14	**112**	2	0	**128**	40	56	14	**6**	116	23	85	17	12	137	**2**	42	8	4	56	437
07:45 AM	**18**	99	**6**	0	123	**45**	**88**	12	1	**146**	**29**	92	20	**17**	**158**	1	**55**	**13**	0	**69**	**496**
08:00 AM	17	73	4	1	95	17	54	12	3	86	14	**102**	**23**	10	149	2	37	6	0	45	375
08:15 AM	18	68	6	0	92	29	60	**15**	5	109	25	95	14	8	142	0	47	5	2	54	397
Total Volume	67	352	18	1	438	131	258	53	15	457	91	374	74	47	586	5	181	32	6	224	1705
% App. Total	15.3	80.4	4.1	0.2		28.7	56.5	11.6	3.3		15.5	63.8	12.6	8		2.2	80.8	14.3	2.7		
PHF	.931	.786	.750	.250	.855	.728	.733	.883	.625	.783	.784	.917	.804	.691	.927	.625	.823	.615	.375	.812	.859

Counts Unlimited Inc.
25286 Jaclyn Avenue
Moreno Valley, CA 92557
951-485-7934

City of Rancho Cucamonga
N/S: Grove Avenue
E/W: Arrow Highway
Weather: Sunny

File Name : RNCGRARAM
Site Code : 9150097
Start Date : 5/27/2009
Page No : 2

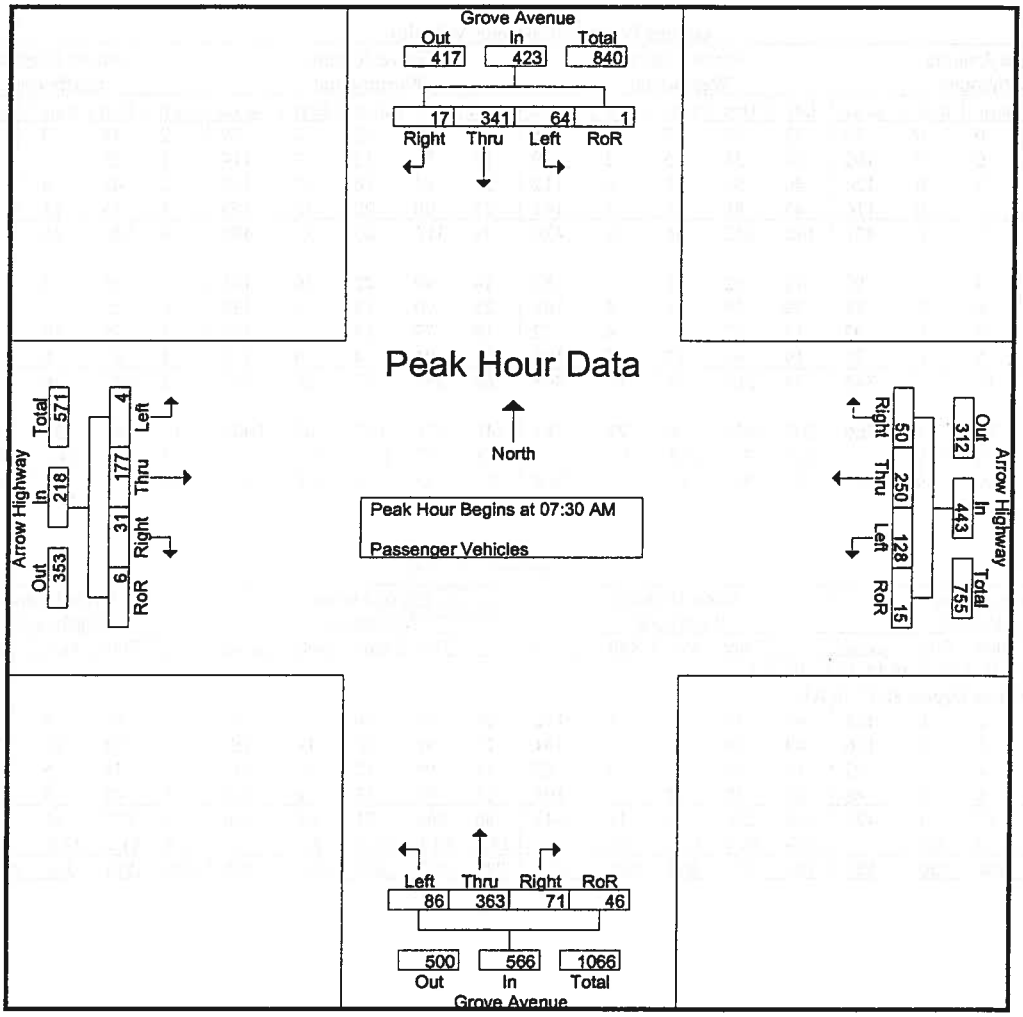

Peak Hour Analysis From 07:30 AM to 08:15 AM - Peak 1 of 1

Peak Hour for Each Approach Begins at:

	07:30 AM					07:30 AM					07:30 AM					07:30 AM				
+0 mins.	14	110	2	0	126	40	53	13	6	112	20	84	16	12	132	2	42	8	4	56
+15 mins.	17	94	5	0	116	43	86	11	1	141	27	90	20	16	153	1	54	13	0	68
+30 mins.	17	71	4	1	93	16	52	11	3	82	14	99	22	10	145	1	36	5	0	42
+45 mins.	16	66	6	0	88	29	59	15	5	108	25	90	13	8	136	0	45	5	2	52
Total Volume	64	341	17	1	423	128	250	50	15	443	86	363	71	46	566	4	177	31	6	218
% App. Total	15.1	80.6	4	0.2		28.9	56.4	11.3	3.4		15.2	64.1	12.5	8.1		1.8	81.2	14.2	2.8	
PHF	.941	.775	.708	.250	.839	.744	.727	.833	.625	.785	.796	.917	.807	.719	.925	.500	.819	.596	.375	.801

Counts Unlimited Inc.
25286 Jaclyn Avenue
Moreno Valley, CA 92557
951-485-7934

City of Rancho Cucamonga
N/S: Grove Avenue
E/W: Arrow Highway
Weather: Sunny

File Name : RNCGRARAM
Site Code : 9150097
Start Date : 5/27/2009
Page No : 1

Groups Printed- Large 2 Axle Vehicles

	Grove Avenue Southbound					Arrow Highway Westbound					Grove Avenue Northbound					Arrow Highway Eastbound					
Start Time	Left	Thru	Right	RoR	App. Total	Left	Thru	Right	RoR	App. Total	Left	Thru	Right	RoR	App. Total	Left	Thru	Right	RoR	App. Total	Int. Total
07:00 AM	0	4	1	0	5	1	1	1	2	5	0	5	3	2	10	1	3	1	1	6	26
07:15 AM	1	1	0	0	2	1	0	1	0	2	0	1	0	0	1	0	0	0	0	0	5
07:30 AM	0	2	0	0	2	0	3	1	0	4	2	1	1	0	4	0	0	0	0	0	10
07:45 AM	1	5	1	0	7	2	2	1	0	5	2	2	0	1	5	0	1	0	0	1	18
Total	2	12	2	0	16	4	6	4	2	16	4	9	4	3	20	1	4	1	1	7	59
08:00 AM	0	2	0	0	2	1	2	1	0	4	0	3	0	0	3	1	1	0	0	2	11
08:15 AM	2	2	0	0	4	0	1	0	0	1	0	5	1	0	6	0	2	0	0	2	13
08:30 AM	0	4	1	0	5	2	3	1	0	6	0	3	1	0	4	2	1	1	0	4	19
08:45 AM	1	2	1	0	4	0	7	0	0	7	0	3	0	0	3	0	0	0	1	1	15
Total	3	10	2	0	15	3	13	2	0	18	0	14	2	0	16	3	4	1	1	9	58
Grand Total	5	22	4	0	31	7	19	6	2	34	4	23	6	3	36	4	8	2	2	16	117
Apprch %	16.1	71	12.9	0		20.6	55.9	17.6	5.9		11.1	63.9	16.7	8.3		25	50	12.5	12.5		
Total %	4.3	18.8	3.4	0	26.5	6	16.2	5.1	1.7	29.1	3.4	19.7	5.1	2.6	30.8	3.4	6.8	1.7	1.7	13.7	

	Grove Avenue Southbound					Arrow Highway Westbound					Grove Avenue Northbound					Arrow Highway Eastbound					
Start Time	Left	Thru	Right	RoR	App. Total		Thru	Right	RoR	App. Total		Thru	Right	RoR	App. Total		Thru	Right	RoR	App. Total	Int. Total
Peak Hour Analysis From 07:30 AM to 08:15 AM - Peak 1 of 1																					
Peak Hour for Entire Intersection Begins at 07:30 AM																					
07:30 AM	0	2	0	0	2	0	3	1	0	4	2	1	1	0	4	0	0	0	0	0	10
07:45 AM	1	5	1	0	7	2	2	1	0	5	2	2	0	1	5	0	1	0	0	1	18
08:00 AM	0	2	0	0	2	1	2	1	0	4	0	3	0	0	3	1	1	0	0	2	11
08:15 AM	2	2	0	0	4	0	1	0	0	1	0	5	1	0	6	0	2	0	0	2	13
Total Volume	3	11	1	0	15	3	8	3	0	14	4	11	2	1	18	1	4	0	0	5	52
% App. Total	20	73.3	6.7	0		21.4	57.1	21.4	0		22.2	61.1	11.1	5.6		20	80	0	0		
PHF	.375	.550	.250	.000	.536	.375	.667	.750	.000	.700	.500	.550	.500	.250	.750	.250	.500	.000	.000	.625	.722

Counts Unlimited Inc.
25286 Jaclyn Avenue
Moreno Valley, CA 92557
951-485-7934

City of Rancho Cucamonga
N/S: Grove Avenue
E/W: Arrow Highway
Weather: Sunny

File Name : RNCGRARAM
Site Code : 9150097
Start Date : 5/27/2009
Page No : 2

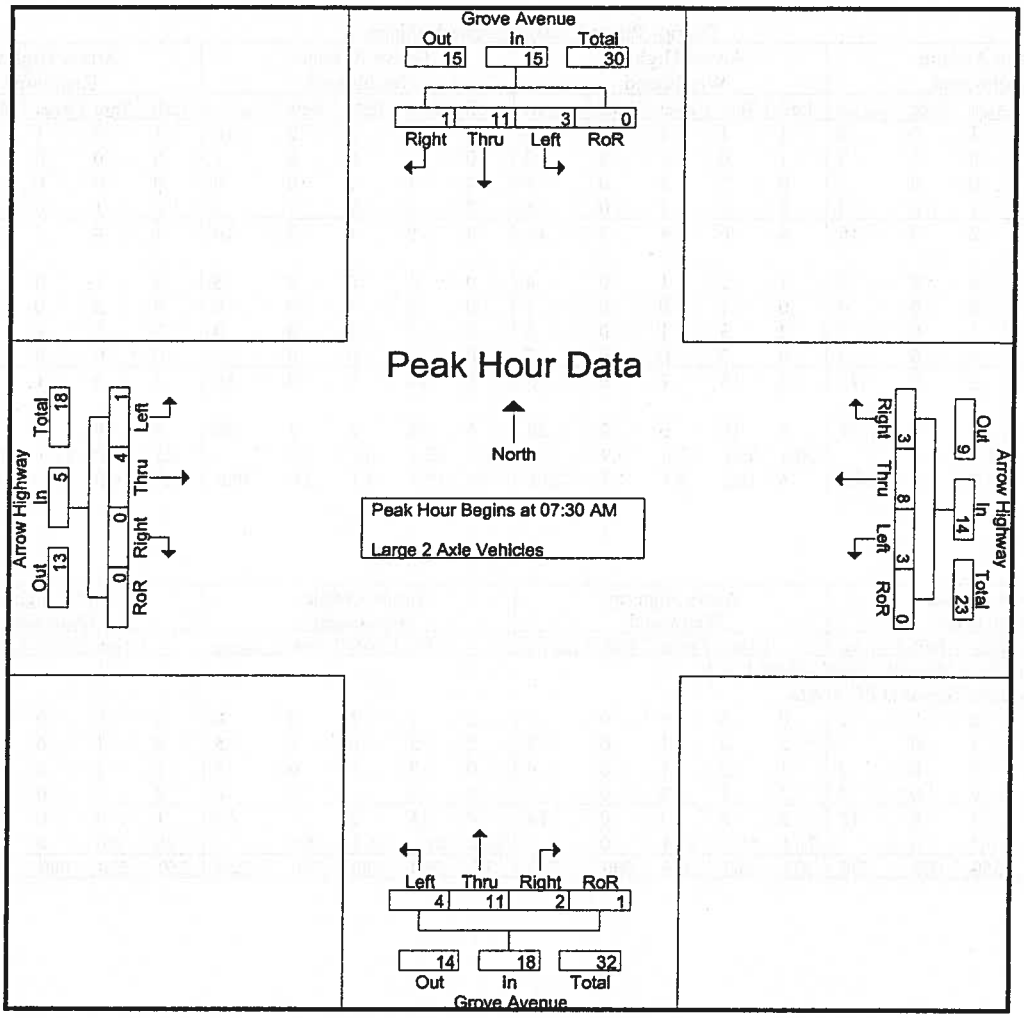

Peak Hour Analysis From 07:30 AM to 08:15 AM - Peak 1 of 1

Peak Hour for Each Approach Begins at:

	07:30 AM					07:30 AM					07:30 AM					07:30 AM				
+0 mins.	0	2	0	0	2	0	3	1	0	4	2	1	1	0	4	0	0	0	0	0
+15 mins.	1	5	1	0	7	2	2	1	0	5	2	2	0	1	5	0	1	0	0	1
+30 mins.	0	2	0	0	2	1	2	1	0	4	0	3	0	0	3	1	1	0	0	2
+45 mins.	2	2	0	0	4	0	1	0	0	1	0	5	1	0	6	0	2	0	0	2
Total Volume	3	11	1	0	15	3	8	3	0	14	4	11	2	1	18	1	4	0	0	5
% App. Total	20	73.3	6.7	0		21.4	57.1	21.4	0		22.2	61.1	11.1	5.6		20	80	0	0	
PHF	.375	.550	.250	.000	.536	.375	.667	.750	.000	.700	.500	.550	.500	.250	.750	.250	.500	.000	.000	.625

Counts Unlimited Inc.
25286 Jaclyn Avenue
Moreno Valley, CA 92557
951-485-7934

City of Rancho Cucamonga
N/S: Grove Avenue
E/W: Arrow Highway
Weather: Sunny

File Name : RNCGRARAM
Site Code : 9150097
Start Date : 5/27/2009
Page No : 1

Groups Printed- 3 Axle Vehicles

	Grove Avenue Southbound					Arrow Highway Westbound					Grove Avenue Northbound					Arrow Highway Eastbound					
Start Time	Left	Thru	Right	RoR	App. Total	Left	Thru	Right	RoR	App. Total	Left	Thru	Right	RoR	App. Total	Left	Thru	Right	RoR	App. Total	Int. Total
07:00 AM	0	0	0	0	0	0	0	0	0	0	0	1	0	0	1	0	0	0	0	0	1
07:15 AM	0	0	0	0	0	0	0	0	0	0	0	0	0	0	0	0	0	0	0	0	0
07:30 AM	0	0	0	0	0	0	0	0	0	0	0	0	0	0	0	0	0	0	0	0	0
07:45 AM	0	0	0	0	0	0	0	0	0	0	0	0	0	0	0	0	0	0	0	0	0
Total	0	0	0	0	0	0	0	0	0	0	0	1	0	0	1	0	0	0	0	0	1
08:00 AM	0	0	0	0	0	0	0	0	0	0	0	0	0	0	0	0	0	1	0	1	1
08:15 AM	0	0	0	0	0	0	0	0	0	0	0	0	0	0	0	0	0	0	0	0	0
08:30 AM	0	0	0	0	0	0	0	1	0	1	0	0	0	0	0	0	0	0	0	0	1
08:45 AM	0	1	0	0	1	0	0	0	0	0	0	0	0	0	0	0	1	0	0	1	2
Total	0	1	0	0	1	0	0	1	0	1	0	0	0	0	0	0	1	1	0	2	4
Grand Total	0	1	0	0	1	0	0	1	0	1	0	1	0	0	1	0	1	1	0	2	5
Apprch %	0	100	0	0		0	0	100	0		0	100	0	0		0	50	50	0		
Total %	0	20	0	0	20	0	0	20	0	20	0	20	0	0	20	0	20	20	0	40	

	Grove Avenue Southbound					Arrow Highway Westbound					Grove Avenue Northbound					Arrow Highway Eastbound					
Start Time	Left	Thru	Right	RoR	App. Total	Left	Thru	Right	RoR	App. Total	Left	Thru	Right	RoR	App. Total	Left	Thru	Right	RoR	App. Total	Int. Total
Peak Hour Analysis From 07:30 AM to 08:15 AM - Peak 1 of 1																					
Peak Hour for Entire Intersection Begins at 07:30 AM																					
07:30 AM	0	0	0	0	0	0	0	0	0	0	0	0	0	0	0	0	0	0	0	0	0
07:45 AM	0	0	0	0	0	0	0	0	0	0	0	0	0	0	0	0	0	0	0	0	0
08:00 AM	0	0	0	0	0	0	0	0	0	0	0	0	0	0	0	0	0	1	0	1	1
08:15 AM	0	0	0	0	0	0	0	0	0	0	0	0	0	0	0	0	0	0	0	0	0
Total Volume	0	0	0	0	0	0	0	0	0	0	0	0	0	0	0	0	0	1	0	1	1
% App. Total	0	0	0	0		0	0	0	0		0	0	0	0		0	0	100	0		
PHF	.000	.000	.000	.000	.000	.000	.000	.000	.000	.000	.000	.000	.000	.000	.000	.000	.000	.250	.000	.250	.250

Counts Unlimited Inc.
25286 Jaclyn Avenue
Moreno Valley, CA 92557
951-485-7934

City of Rancho Cucamonga
N/S: Grove Avenue
E/W: Arrow Highway
Weather: Sunny

File Name : RNCGRARAM
Site Code : 9150097
Start Date : 5/27/2009
Page No : 2

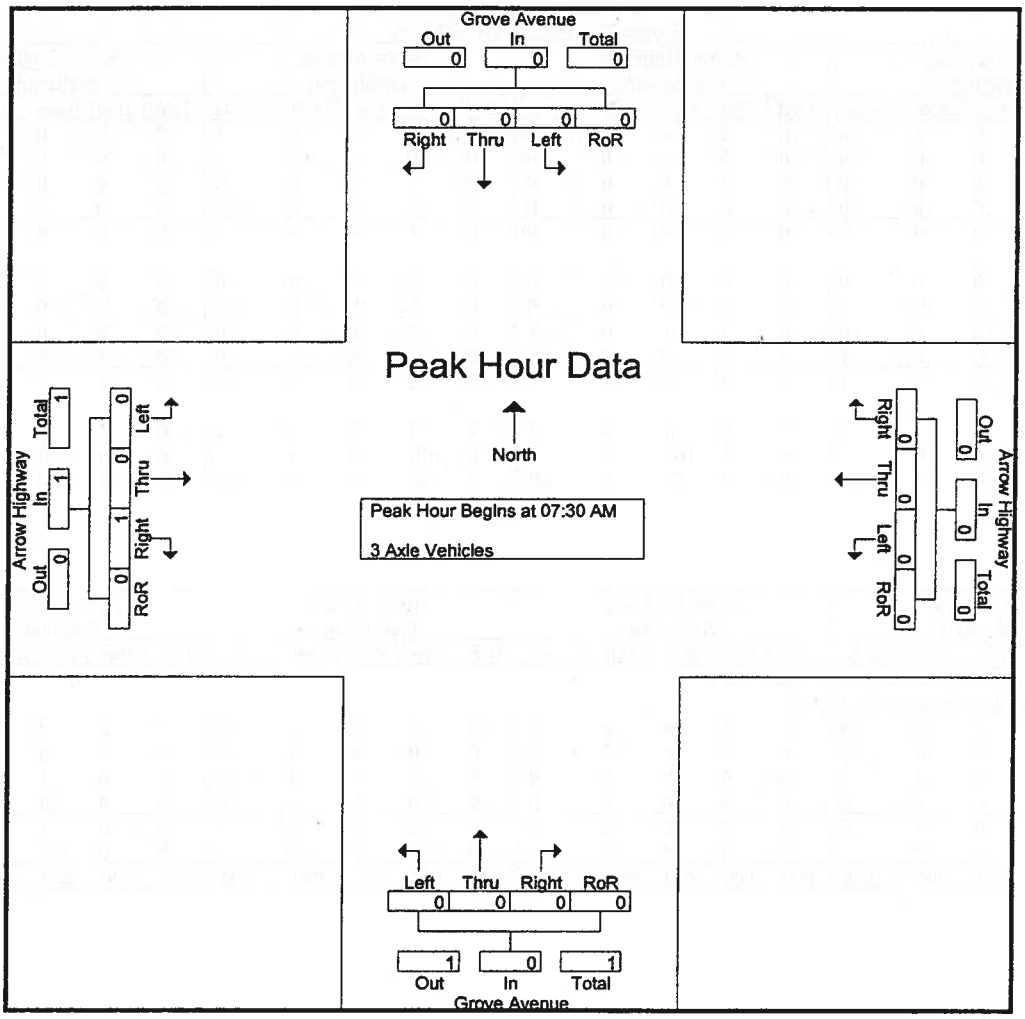

Peak Hour Analysis From 07:30 AM to 08:15 AM - Peak 1 of 1

Peak Hour for Each Approach Begins at:

	07:30 AM					07:30 AM					07:30 AM					07:30 AM				
+0 mins.	0	0	0	0	0	0	0	0	0	0	0	0	0	0	0	0	0	0	0	0
+15 mins.	0	0	0	0	0	0	0	0	0	0	0	0	0	0	0	0	0	0	0	0
+30 mins.	0	0	0	0	0	0	0	0	0	0	0	0	0	0	0	0	0	1	0	1
+45 mins.	0	0	0	0	0	0	0	0	0	0	0	0	0	0	0	0	0	0	0	0
Total Volume	0	0	0	0	0	0	0	0	0	0	0	0	0	0	0	0	0	1	0	1
% App. Total	0	0	0	0		0	0	0	0		0	0	0	0		0	0	100	0	
PHF	.000	.000	.000	.000	.000	.000	.000	.000	.000	.000	.000	.000	.000	.000	.000	.000	.000	.250	.000	.250

Counts Unlimited Inc.
25286 Jaclyn Avenue
Moreno Valley, CA 92557
951-485-7934

City of Rancho Cucamonga
N/S: Grove Avenue
E/W: Arrow Highway
Weather: Sunny

File Name : RNCGRARAM
Site Code : 9150097
Start Date : 5/27/2009
Page No : 1

Groups Printed- 4+ Axle Trucks

	Grove Avenue Southbound					Arrow Highway Westbound					Grove Avenue Northbound					Arrow Highway Eastbound					
Start Time	Left	Thru	Right	RoR	App. Total	Left	Thru	Right	RoR	App. Total	Left	Thru	Right	RoR	App. Total	Left	Thru	Right	RoR	App. Total	Int. Total
07:00 AM	0	2	0	0	2	0	0	0	0	0	0	0	0	0	0	0	0	0	0	0	2
07:15 AM	0	0	0	0	0	0	0	0	0	0	0	0	0	0	0	0	0	1	0	1	1
07:30 AM	0	0	0	0	0	0	0	0	0	0	1	0	0	0	1	0	0	0	0	0	1
07:45 AM	0	0	0	0	0	0	0	0	0	0	0	0	0	0	0	0	0	0	0	0	0
Total	0	2	0	0	2	0	0	0	0	0	1	0	0	0	1	0	0	1	0	1	4
08:00 AM	0	0	0	0	0	0	0	0	0	0	0	0	1	0	1	0	0	0	0	0	1
08:15 AM	0	0	0	0	0	0	0	0	0	0	0	0	0	0	0	0	0	0	0	0	0
08:30 AM	0	0	0	0	0	0	0	1	0	1	1	0	0	0	1	0	0	0	0	0	2
08:45 AM	0	1	0	0	1	0	0	0	0	0	0	0	0	0	0	0	0	1	0	1	2
Total	0	1	0	0	1	0	0	1	0	1	1	0	1	0	2	0	0	1	0	1	5
Grand Total	0	3	0	0	3	0	0	1	0	1	2	0	1	0	3	0	0	2	0	2	9
Apprch %	0	100	0	0		0	0	100	0		66.7	0	33.3	0		0	0	100	0		
Total %	0	33.3	0	0	33.3	0	0	11.1	0	11.1	22.2	0	11.1	0	33.3	0	0	22.2	0	22.2	

	Grove Avenue Southbound					Arrow Highway Westbound					Grove Avenue Northbound					Arrow Highway Eastbound					
Start Time	Left	Thru	Right	RoR	App. Total		Thru	Right	RoR	App. Total		Thru	Right	RoR	App. Total		Thru	Right	RoR	App. Total	Int. Total
Peak Hour Analysis From 07:30 AM to 08:15 AM - Peak 1 of 1																					
Peak Hour for Entire Intersection Begins at 07:30 AM																					
07:30 AM	0	0	0	0	0	0	0	0	0	0	1	0	0	0	1	0	0	0	0	0	1
07:45 AM	0	0	0	0	0	0	0	0	0	0	0	0	0	0	0	0	0	0	0	0	0
08:00 AM	0	0	0	0	0	0	0	0	0	0	0	0	1	0	1	0	0	0	0	0	1
08:15 AM	0	0	0	0	0	0	0	0	0	0	0	0	0	0	0	0	0	0	0	0	0
Total Volume	0	0	0	0	0	0	0	0	0	0	1	0	1	0	2	0	0	0	0	0	2
% App. Total	0	0	0	0		0	0	0	0		50	0	50	0		0	0	0	0		
PHF	.000	.000	.000	.000	.000	.000	.000	.000	.000	.000	.250	.000	.250	.000	.500	.000	.000	.000	.000	.000	.500

Counts Unlimited Inc.
25286 Jaclyn Avenue
Moreno Valley, CA 92557
951-485-7934

City of Rancho Cucamonga
N/S: Grove Avenue
E/W: Arrow Highway
Weather: Sunny

File Name : RNCGRARAM
Site Code : 9150097
Start Date : 5/27/2009
Page No : 2

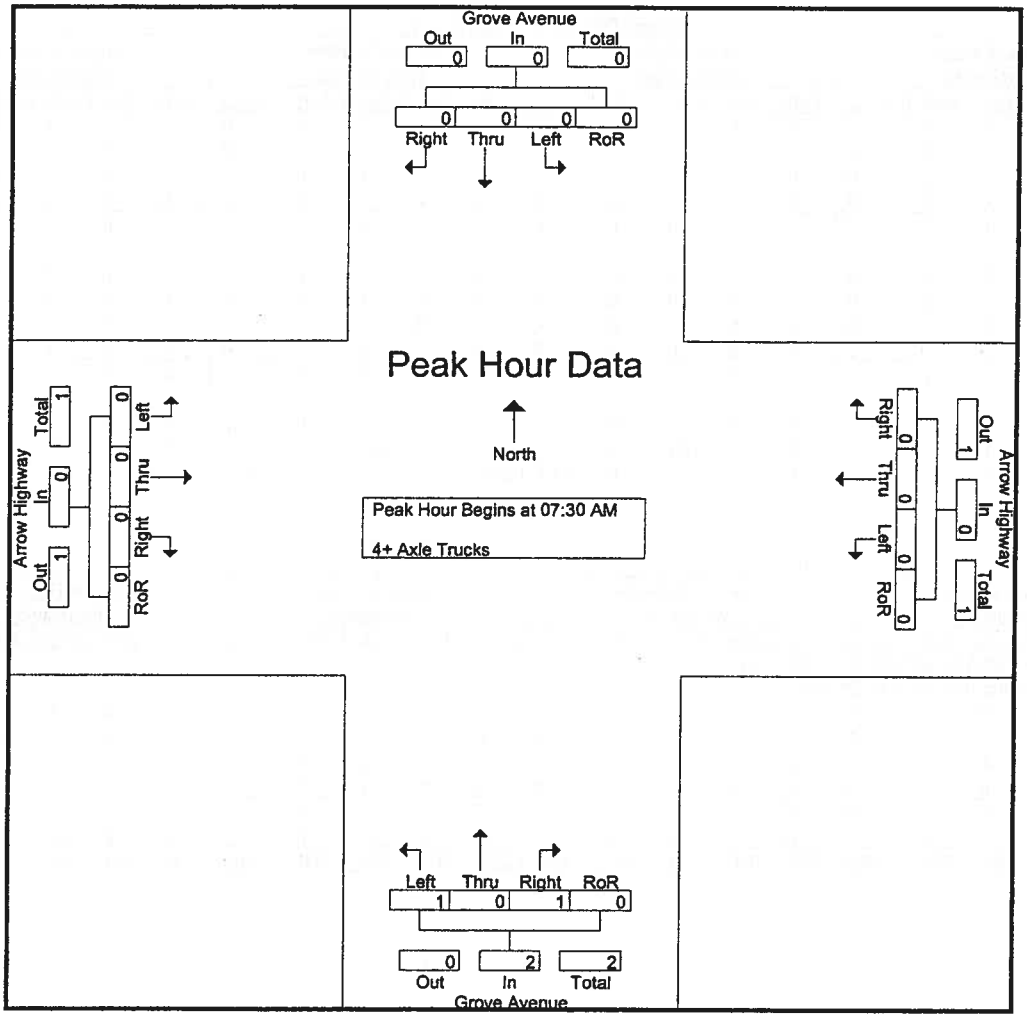

Peak Hour Analysis From 07:30 AM to 08:15 AM - Peak 1 of 1

Peak Hour for Each Approach Begins at:

	07:30 AM					07:30 AM					07:30 AM					07:30 AM				
+0 mins.	0	0	0	0	0	0	0	0	0	0	1	0	0	0	1	0	0	0	0	0
+15 mins.	0	0	0	0	0	0	0	0	0	0	0	0	0	0	0	0	0	0	0	0
+30 mins.	0	0	0	0	0	0	0	0	0	0	0	0	1	0	1	0	0	0	0	0
+45 mins.	0	0	0	0	0	0	0	0	0	0	0	0	0	0	0	0	0	0	0	0
Total Volume	0	0	0	0	0	0	0	0	0	0	1	0	1	0	2	0	0	0	0	0
% App. Total	0	0	0	0		0	0	0	0		50	0	50	0		0	0	0	0	
PHF	.000	.000	.000	.000	.000	.000	.000	.000	.000	.000	.250	.000	.250	.000	.500	.000	.000	.000	.000	.000

Counts Unlimited Inc.
25286 Jaclyn Avenue
Moreno Valley, CA 92557
951-485-7934

City of Rancho Cucamonga
N/S: Grove Avenue
E/W: Arrow Highway
Weather: Sunny

File Name : RNCGRARPM
Site Code : 9150097
Start Date : 5/27/2009
Page No : 1

Groups Printed- Passenger Vehicles - Large 2 Axle Vehicles - 3 Axle Vehicles - 4+ Axle Trucks

	Grove Avenue Southbound					Arrow Highway Westbound					Grove Avenue Northbound					Arrow Highway Eastbound					
Start Time	Left	Thru	Right	RoR	App. Total	Left	Thru	Right	RoR	App. Total	Left	Thru	Right	RoR	App. Total	Left	Thru	Right	RoR	App. Total	Int. Total
04:00 PM	19	85	6	1	111	35	49	17	4	105	11	124	16	9	160	10	72	23	3	108	484
04:15 PM	23	95	4	1	123	16	48	19	2	85	14	120	25	4	163	5	58	15	5	83	454
04:30 PM	15	106	6	0	127	25	52	27	5	109	16	126	23	15	180	5	51	19	2	77	493
04:45 PM	21	82	2	2	107	27	53	19	4	103	20	108	25	11	164	6	55	12	6	79	453
Total	78	368	18	4	468	103	202	82	15	402	61	478	89	39	667	26	236	69	16	347	1884
05:00 PM	22	99	6	2	129	22	62	22	1	107	11	135	28	12	186	6	79	20	4	109	531
05:15 PM	21	85	2	0	108	25	46	18	6	95	9	124	20	11	164	6	69	23	1	99	466
05:30 PM	15	84	7	0	106	24	41	30	2	97	12	122	25	7	166	4	84	15	2	105	474
05:45 PM	21	74	4	1	100	19	56	21	2	98	14	103	22	8	147	2	55	7	6	70	415
Total	79	342	19	3	443	90	205	91	11	397	46	484	95	38	663	18	287	65	13	383	1886
Grand Total	157	710	37	7	911	193	407	173	26	799	107	962	184	77	1330	44	523	134	29	730	3770
Apprch %	17.2	77.9	4.1	0.8		24.2	50.9	21.7	3.3		8	72.3	13.8	5.8		6	71.6	18.4	4		
Total %	4.2	18.8	1	0.2	24.2	5.1	10.8	4.6	0.7	21.2	2.8	25.5	4.9	2	35.3	1.2	13.9	3.6	0.8	19.4	
Passenger Vehicles																					
% Passenger Vehicles	91.1	98.9	100	100	97.6	98.4	98.8	96	100	98.1	87.9	99.2	99.5	98.7	98.3	93.2	98.1	94	93.1	96.8	97.8
Large 2 Axle Vehicles																					
% Large 2 Axle Vehicles	4.5	1	0	0	1.5	1.6	1.2	4	0	1.9	5.6	0.7	0.5	1.3	1.1	4.5	1.7	0.7	3.4	1.8	1.5
3 Axle Vehicles	7	1	0	0	8	0	0	0	0	0	0	1	0	0	1	1	1	0	0	2	11
% 3 Axle Vehicles	4.5	0.1	0	0	0.9	0	0	0	0	0	0	0.1	0	0	0.1	2.3	0.2	0	0	0.3	0.3
4+ Axle Trucks	0	0	0	0	0	0	0	0	0	0	7	0	0	0	7	0	0	7	1	8	15
% 4+ Axle Trucks																					

	Grove Avenue Southbound					Arrow Highway Westbound					Grove Avenue Northbound					Arrow Highway Eastbound					
Start Time	Left	Thru	Right	RoR	App. Total	Left	Thru	Right	RoR	App. Total	Left	Thru	Right	RoR	App. Total	Left	Thru	Right	RoR	App. Total	Int. Total
Peak Hour Analysis From 04:00 PM to 05:45 PM - Peak 1 of 1																					
Peak Hour for Entire Intersection Begins at 04:30 PM																					
04:30 PM	15	**106**	**6**	0	127	25	52	**27**	5	**109**	16	126	23	**15**	180	5	51	19	2	77	493
04:45 PM	21	82	2	**2**	107	**27**	53	19	4	103	**20**	108	25	11	164	**6**	55	12	**6**	79	453
05:00 PM	**22**	99	6	2	**129**	22	**62**	22	1	107	11	**135**	**28**	12	**186**	6	**79**	20	4	**109**	**531**
05:15 PM	21	85	2	0	108	25	46	18	**6**	95	9	124	20	11	164	6	69	**23**	1	99	466
Total Volume	79	372	16	4	471	99	213	86	16	414	56	493	96	49	694	23	254	74	13	364	1943
% App. Total	16.8	79	3.4	0.8		23.9	51.4	20.8	3.9		8.1	71	13.8	7.1		6.3	69.8	20.3	3.6		
PHF	.898	.877	.667	.500	.913	.917	.859	.796	.667	.950	.700	.913	.857	.817	.933	.958	.804	.804	.542	.835	.915

Counts Unlimited Inc.
25286 Jaclyn Avenue
Moreno Valley, CA 92557
951-485-7934

City of Rancho Cucamonga
N/S: Grove Avenue
E/W: Arrow Highway
Weather: Sunny

File Name : RNCGRARPM
Site Code : 9150097
Start Date : 5/27/2009
Page No : 2

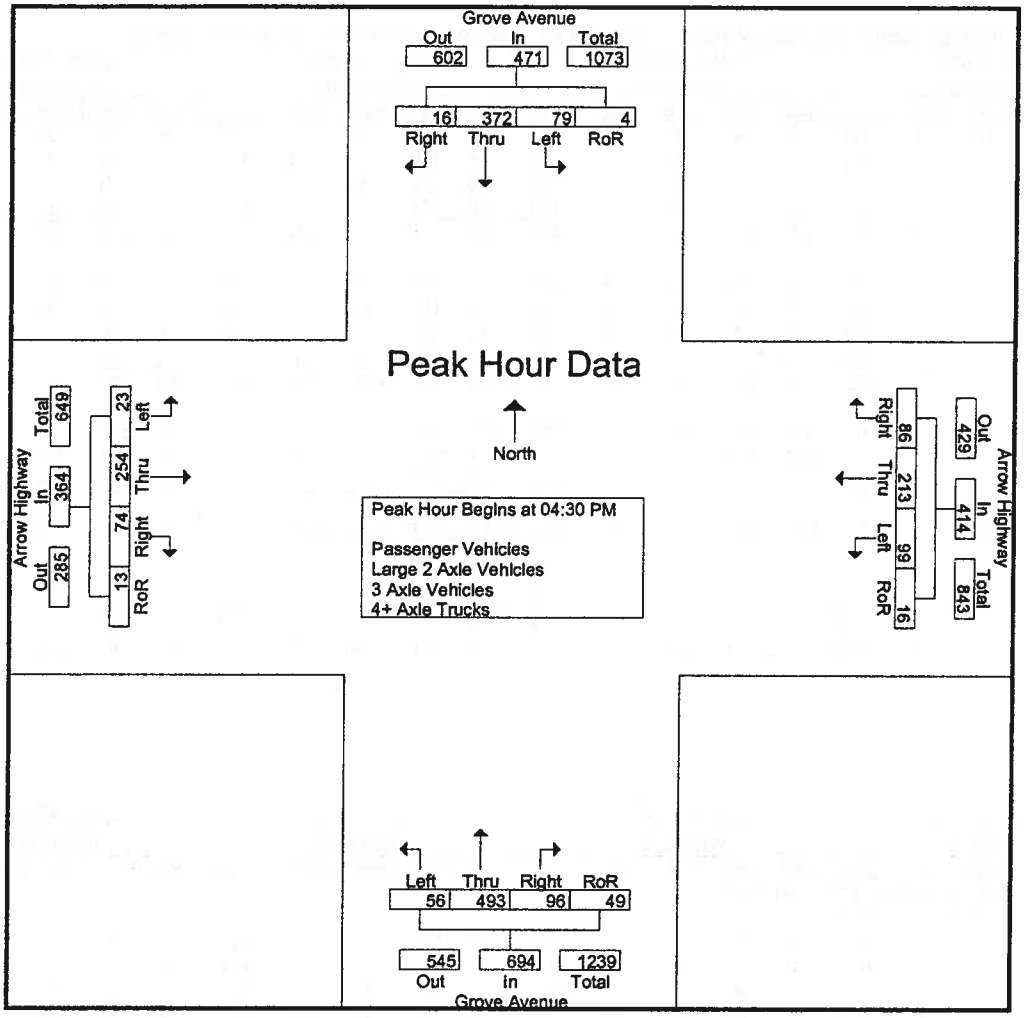

Peak Hour Analysis From 04:00 PM to 05:45 PM - Peak 1 of 1

Peak Hour for Each Approach Begins at:

	04:15 PM					04:30 PM					04:30 PM					04:45 PM				
+0 mins.	**23**	95	4	1	123	25	52	**27**	5	**109**	16	126	23	**15**	180	**6**	55	12	6	79
+15 mins.	15	**106**	6	0	127	**27**	53	19	4	103	**20**	108	25	11	164	6	79	20	4	**109**
+30 mins.	21	82	2	2	107	22	**62**	22	1	107	11	**135**	**28**	12	**186**	6	69	**23**	1	99
+45 mins.	22	99	6	2	**129**	25	46	18	**6**	95	9	124	20	11	164	4	**84**	15	2	105
Total Volume	81	382	18	5	486	99	213	86	16	414	56	493	96	49	694	22	287	70	13	392
% App. Total	16.7	78.6	3.7	1		23.9	51.4	20.8	3.9		8.1	71	13.8	7.1		5.6	73.2	17.9	3.3	
PHF	.880	.901	.750	.625	.942	.917	.859	.796	.667	.950	.700	.913	.857	.817	.933	.917	.854	.761	.542	.899

Counts Unlimited Inc.
25286 Jaclyn Avenue
Moreno Valley, CA 92557
951-485-7934

City of Rancho Cucamonga
N/S: Grove Avenue
E/W: Arrow Highway
Weather: Sunny

File Name : RNCGRARPM
Site Code : 9150097
Start Date : 5/27/2009
Page No : 1

Groups Printed- Passenger Vehicles

	Grove Avenue Southbound					Arrow Highway Westbound					Grove Avenue Northbound					Arrow Highway Eastbound					
Start Time	Left	Thru	Right	RoR	App. Total	Left	Thru	Right	RoR	App. Total	Left	Thru	Right	RoR	App. Total	Left	Thru	Right	RoR	App. Total	Int. Total
04:00 PM	16	85	6	1	108	35	48	15	4	102	10	123	16	9	158	8	72	23	3	106	474
04:15 PM	19	93	4	1	117	16	48	19	2	85	13	120	25	4	162	5	57	14	5	81	445
04:30 PM	12	104	6	0	122	25	51	24	5	105	15	124	23	15	177	5	50	17	2	74	478
04:45 PM	19	82	2	2	105	25	52	19	4	100	19	108	25	11	163	6	54	12	6	78	446
Total	66	364	18	4	452	101	199	77	15	392	57	475	89	39	660	24	233	66	16	339	1843
05:00 PM	22	98	6	2	128	22	61	21	1	105	9	133	28	11	181	6	78	18	3	105	519
05:15 PM	20	84	2	0	106	25	45	18	6	94	6	124	19	11	160	5	68	21	1	95	455
05:30 PM	15	84	7	0	106	23	41	30	2	96	11	119	25	7	162	4	84	15	2	105	469
05:45 PM	20	72	4	1	97	19	56	20	2	97	11	103	22	8	144	2	50	6	5	63	401
Total	77	338	19	3	437	89	203	89	11	392	37	479	94	37	647	17	280	60	11	368	1844
Grand Total	143	702	37	7	889	190	402	166	26	784	94	954	183	76	1307	41	513	126	27	707	3687
Apprch %	16.1	79	4.2	0.8		24.2	51.3	21.2	3.3		7.2	73	14	5.8		5.8	72.6	17.8	3.8		
Total %	3.9	19	1	0.2	24.1	5.2	10.9	4.5	0.7	21.3	2.5	25.9	5	2.1	35.4	1.1	13.9	3.4	0.7	19.2	

	Grove Avenue Southbound					Arrow Highway Westbound					Grove Avenue Northbound					Arrow Highway Eastbound					
Start Time	Left	Thru	Right	RoR	App. Total		Thru	Right	RoR	App. Total		Thru	Right	RoR	App. Total		Thru	Right	RoR	App. Total	Int. Total
Peak Hour Analysis From 04:30 PM to 05:15 PM - Peak 1 of 1																					
Peak Hour for Entire Intersection Begins at 04:30 PM																					
04:30 PM	12	**104**	**6**	0	122	**25**	51	**24**	5	**105**	15	124	23	**15**	177	5	50	17	2	74	478
04:45 PM	19	82	2	**2**	105	25	52	19	4	100	**19**	108	25	11	163	**6**	54	12	**6**	78	446
05:00 PM	**22**	98	6	2	**128**	22	**61**	21	1	105	9	**133**	**28**	11	**181**	6	**78**	18	3	**105**	**519**
05:15 PM	20	84	2	0	106	25	45	18	**6**	94	6	124	19	11	160	5	68	**21**	1	95	455
Total Volume	73	368	16	4	461	97	209	82	16	404	49	489	95	48	681	22	250	68	12	352	1898
% App. Total	15.8	79.8	3.5	0.9		24	51.7	20.3	4		7.2	71.8	14	7		6.2	71	19.3	3.4		
PHF	.830	.885	.667	.500	.900	.970	.857	.854	.667	.962	.645	.919	.848	.800	.941	.917	.801	.810	.500	.838	.914

Counts Unlimited Inc.
25286 Jaclyn Avenue
Moreno Valley, CA 92557
951-485-7934

City of Rancho Cucamonga
N/S: Grove Avenue
E/W: Arrow Highway
Weather: Sunny

File Name : RNCGRARPM
Site Code : 9150097
Start Date : 5/27/2009
Page No : 2

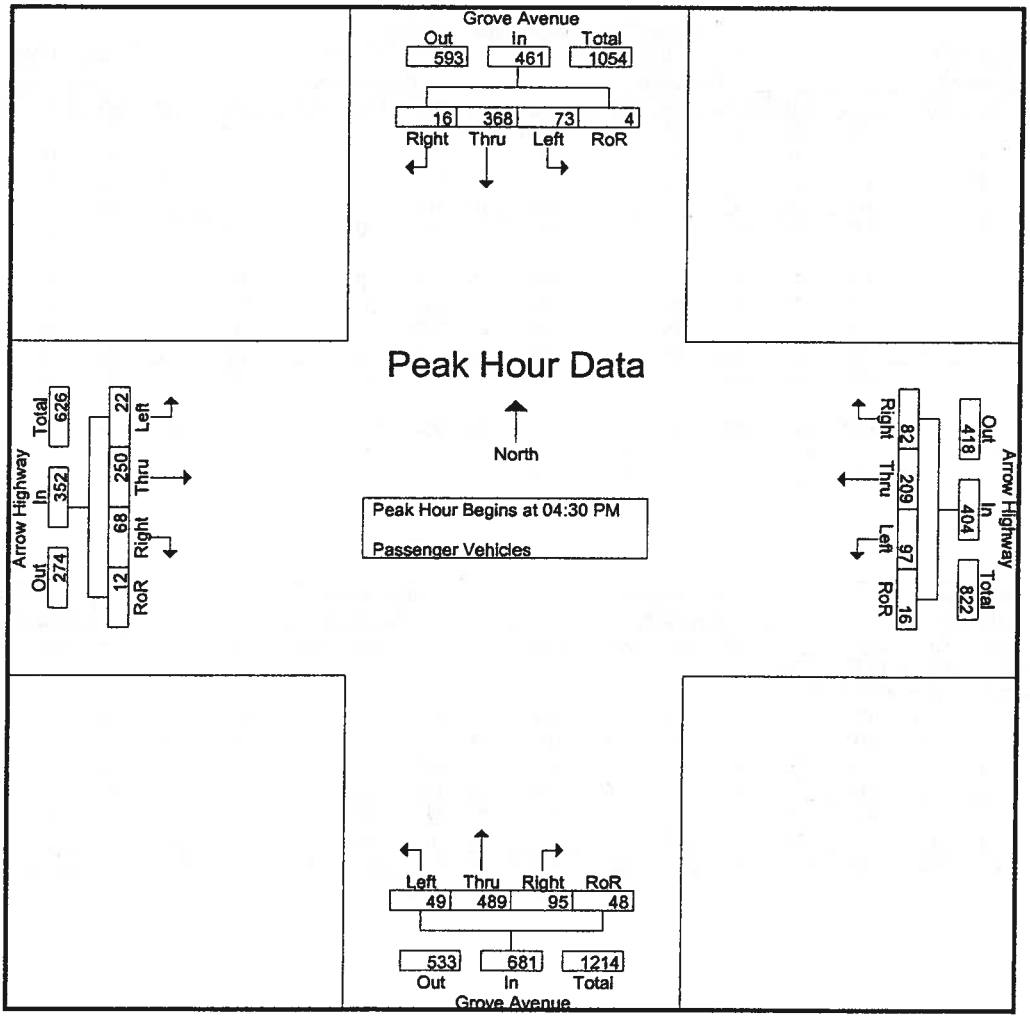

Peak Hour Analysis From 04:30 PM to 05:15 PM - Peak 1 of 1

Peak Hour for Each Approach Begins at:

	04:30 PM					04:30 PM					04:30 PM					04:30 PM				
+0 mins.	12	104	6	0	122	25	51	24	5	105	15	124	23	15	177	5	50	17	2	74
+15 mins.	19	82	2	2	105	25	52	19	4	100	19	108	25	11	163	6	54	12	6	78
+30 mins.	22	98	6	2	128	22	61	21	1	105	9	133	28	11	181	6	78	18	3	105
+45 mins.	20	84	2	0	106	25	45	18	6	94	6	124	19	11	160	5	68	21	1	95
Total Volume	73	368	16	4	461	97	209	82	16	404	49	489	95	48	681	22	250	68	12	352
% App. Total	15.8	79.8	3.5	0.9		24	51.7	20.3	4		7.2	71.8	14	7		6.2	71	19.3	3.4	
PHF	.830	.885	.667	.500	.900	.970	.857	.854	.667	.962	.645	.919	.848	.800	.941	.917	.801	.810	.500	.838

Counts Unlimited Inc.
25286 Jaclyn Avenue
Moreno Valley, CA 92557
951-485-7934

City of Rancho Cucamonga
N/S: Grove Avenue
E/W: Arrow Highway
Weather: Sunny

File Name : RNCGRARPM
Site Code : 9150097
Start Date : 5/27/2009
Page No : 2

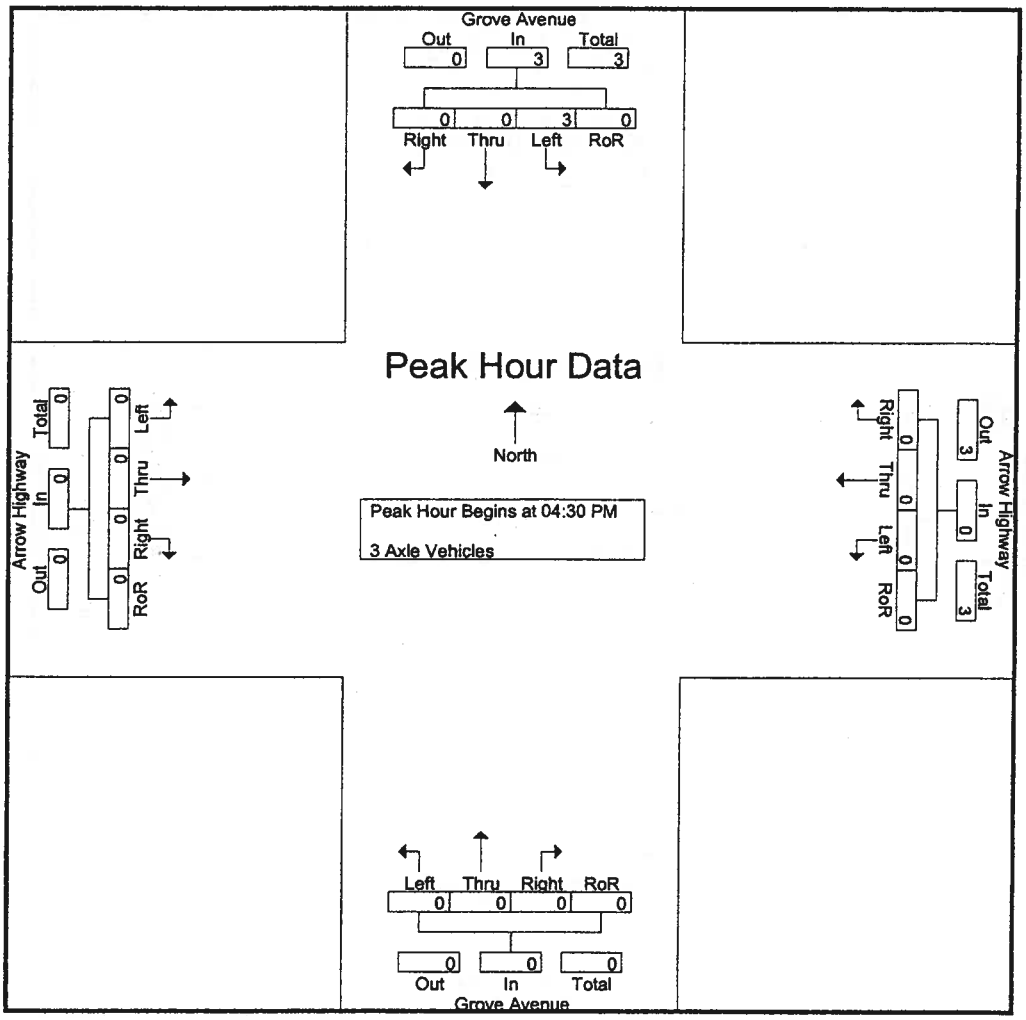

Peak Hour Analysis From 04:30 PM to 05:15 PM - Peak 1 of 1

Peak Hour for Each Approach Begins at:

	04:30 PM					04:30 PM					04:30 PM					04:30 PM				
+0 mins.	3	0	0	0	3	0	0	0	0	0	0	0	0	0	0	0	0	0	0	0
+15 mins.	0	0	0	0	0	0	0	0	0	0	0	0	0	0	0	0	0	0	0	0
+30 mins.	0	0	0	0	0	0	0	0	0	0	0	0	0	0	0	0	0	0	0	0
+45 mins.	0	0	0	0	0	0	0	0	0	0	0	0	0	0	0	0	0	0	0	0
Total Volume	3	0	0	0	3	0	0	0	0	0	0	0	0	0	0	0	0	0	0	0
% App. Total	100	0	0	0		0	0	0	0		0	0	0	0		0	0	0	0	
PHF	.250	.000	.000	.000	.250	.000	.000	.000	.000	.000	.000	.000	.000	.000	.000	.000	.000	.000	.000	.000

Counts Unlimited Inc.
25286 Jaclyn Avenue
Moreno Valley, CA 92557
951-485-7934

City of Rancho Cucamonga
N/S: Grove Avenue
E/W: Arrow Highway
Weather: Sunny

File Name : RNCGRARPM
Site Code : 9150097
Start Date : 5/27/2009
Page No : 2

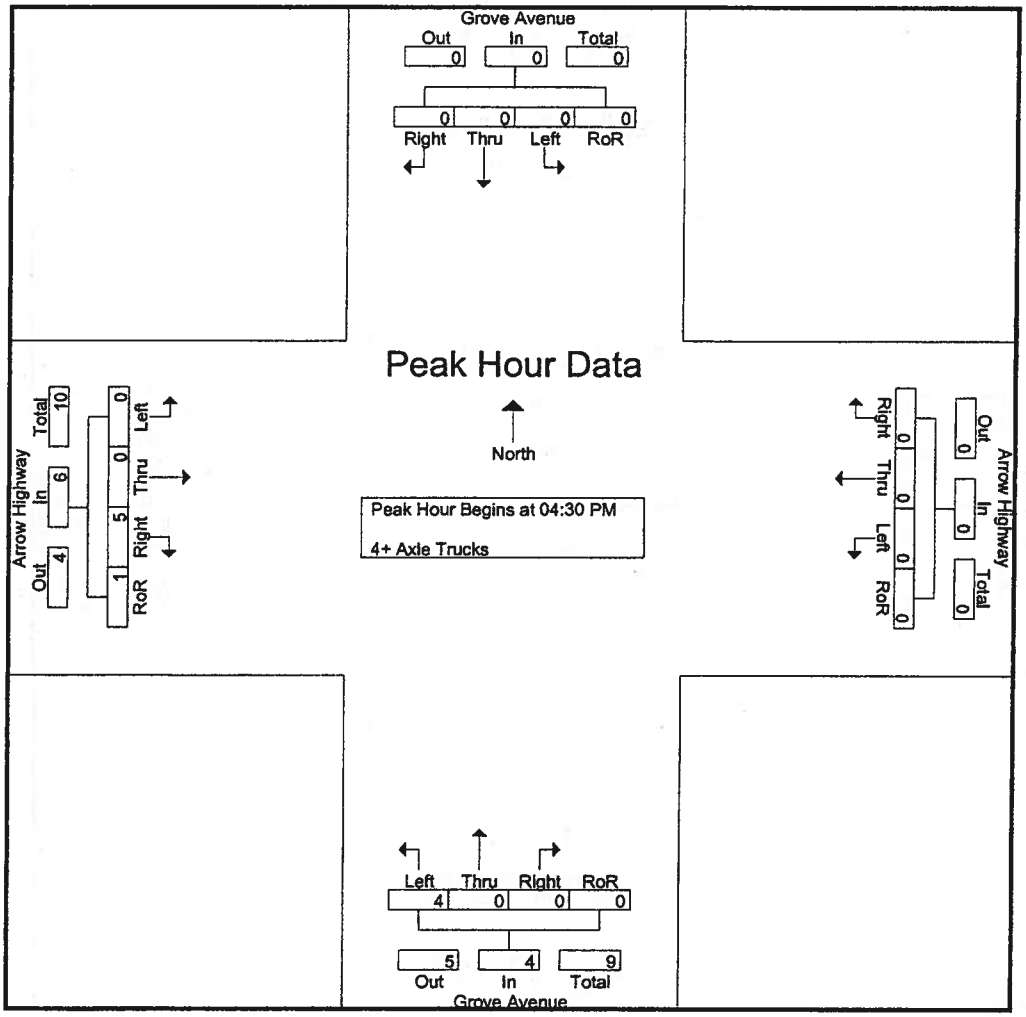

Peak Hour Analysis From 04:30 PM to 05:15 PM - Peak 1 of 1

Peak Hour for Each Approach Begins at:

	04:30 PM					04:30 PM					04:30 PM					04:30 PM				
+0 mins.	0	0	0	0	0	0	0	0	0	0	1	0	0	0	1	0	0	2	0	2
+15 mins.	0	0	0	0	0	0	0	0	0	0	1	0	0	0	1	0	0	0	0	0
+30 mins.	0	0	0	0	0	0	0	0	0	0	1	0	0	0	1	0	0	2	1	3
+45 mins.	0	0	0	0	0	0	0	0	0	0	1	0	0	0	1	0	0	1	0	1
Total Volume	0	0	0	0	0	0	0	0	0	0	4	0	0	0	4	0	0	5	1	6
% App. Total	0	0	0	0		0	0	0	0		100	0	0	0		0	0	83.3	16.7	
PHF	.000	.000	.000	.000	.000	.000	.000	.000	.000	.000	1.000	.000	.000	.000	1.000	.000	.000	.625	.250	.500

PASSENGER CAR EQUIVALENCY PEAK HOUR COUNT SUMMARY

INTERSECTION 3
Carnelian Street (NS) / 19th Street / SR-30 (EW)

AM PEAK HOUR

SOUTHBOUND

Total	90	678	74
4-Axle	3	0	0
3-Axle	0	0	0
Buses/RV's	5	8	2
Autos	82	670	72

Eastbound

Total	4-Axle	3-Axle	Buses/ RV's	Autos
194	0	0	3	191
119	0	0	5	114
122	0	0	3	119

Westbound

Autos	Buses/ RV's	3-Axle	4-Axle	Total
174	3	0	0	177
248	0	0	0	248
184	9	0	0	193

NORTHBOUND

Autos	77	543	85
Buses/RV's	0	12	3
3-Axle	0	0	0
4-Axle	0	3	0
Total	77	558	68

URBAN CROSSROADS

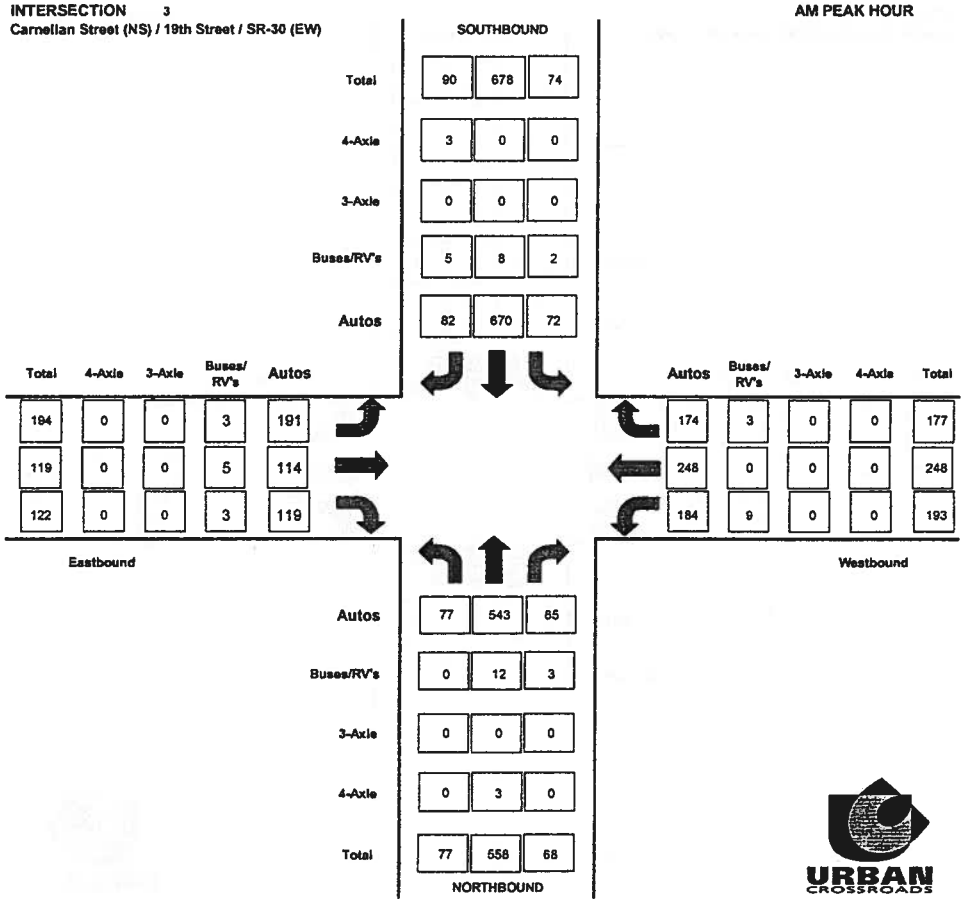

INTERSECTION 3
Carnelian Street (NS) / 19th Street / SR-30 (EW)

PM PEAK HOUR

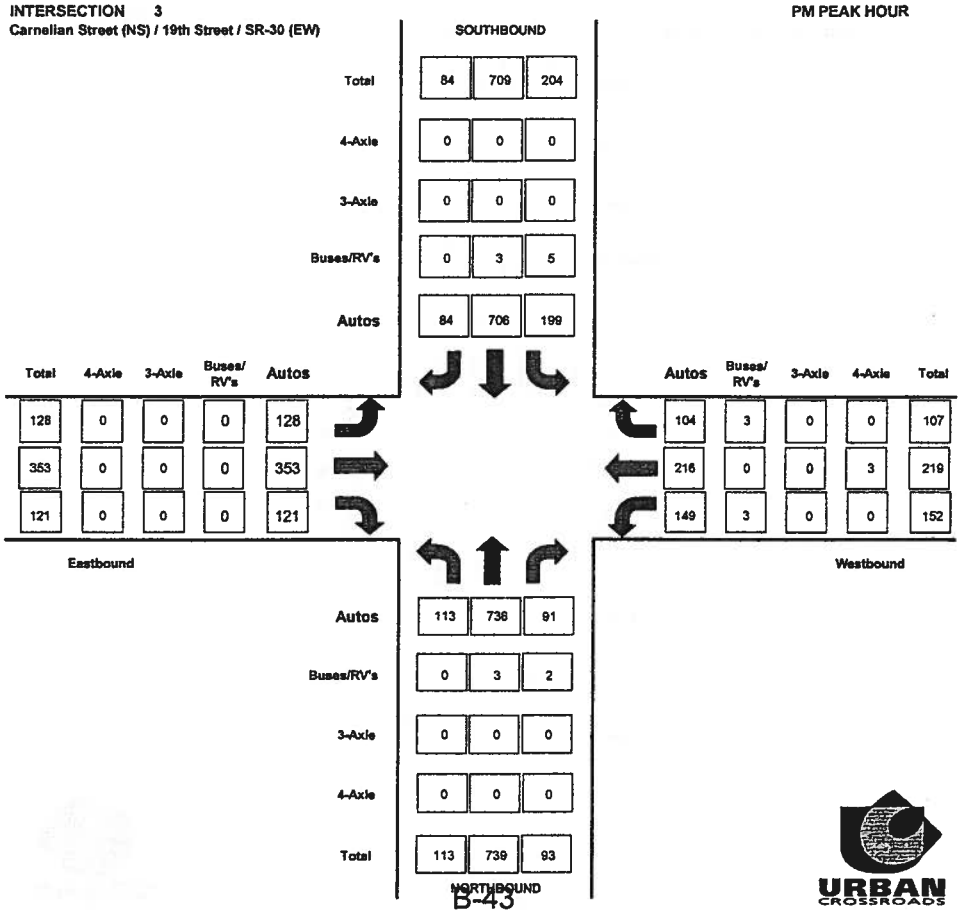

SOUTHBOUND

Total	84	709	204
4-Axle	0	0	0
3-Axle	0	0	0
Buses/RV's	0	3	5
Autos	84	706	199

Eastbound

Total	4-Axle	3-Axle	Buses/ RV's	Autos
128	0	0	0	128
353	0	0	0	353
121	0	0	0	121

Westbound

Autos	Buses/ RV's	3-Axle	4-Axle	Total
104	3	0	0	107
216	0	0	3	219
149	3	0	0	152

NORTHBOUND

Autos	113	736	91
Buses/RV's	0	3	2
3-Axle	0	0	0
4-Axle	0	0	0
Total	113	739	93

URBAN CROSSROADS

U:\Ucjobs_08800-07000\0700\06789\Excel\Existing Vols 2 Graphics Summary

RAW PEAK HOUR COUNT SUMMARY

INTERSECTION 3
Carnelian Street (NS) / 19th Street / SR-30 (EW)

AM PEAK HOUR

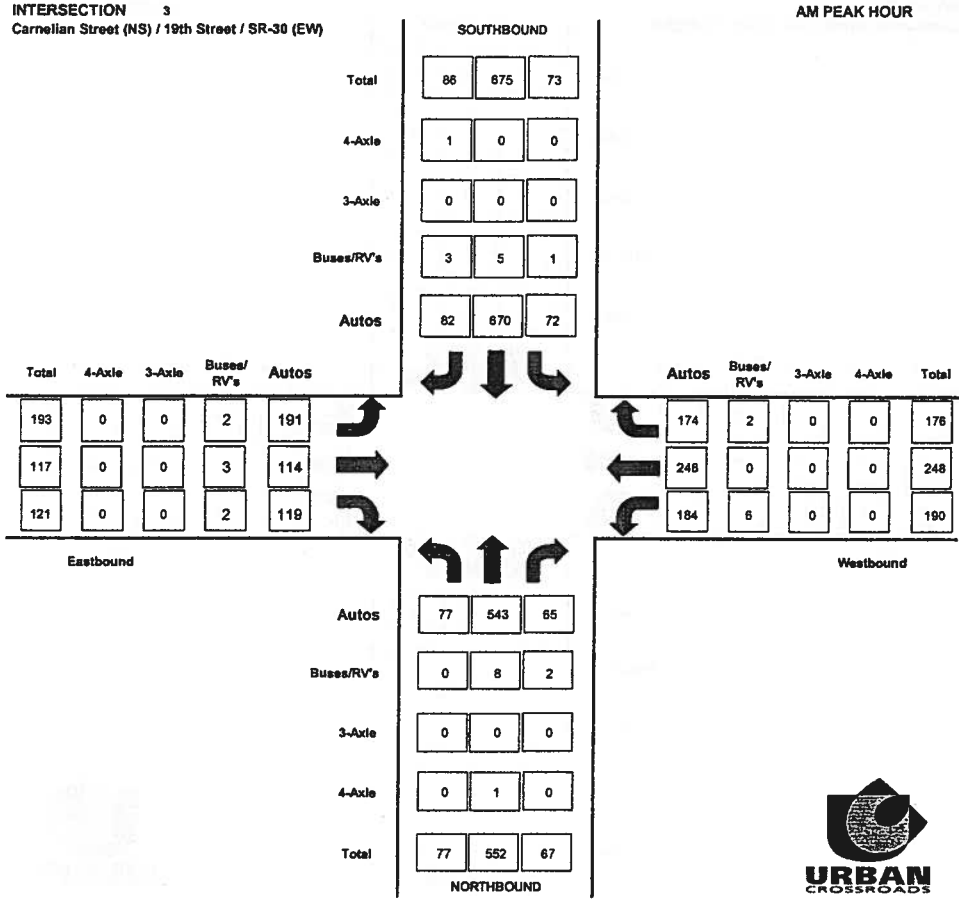

INTERSECTION 3
Carnelian Street (NS) / 19th Street / SR-30 (EW)

PM PEAK HOUR

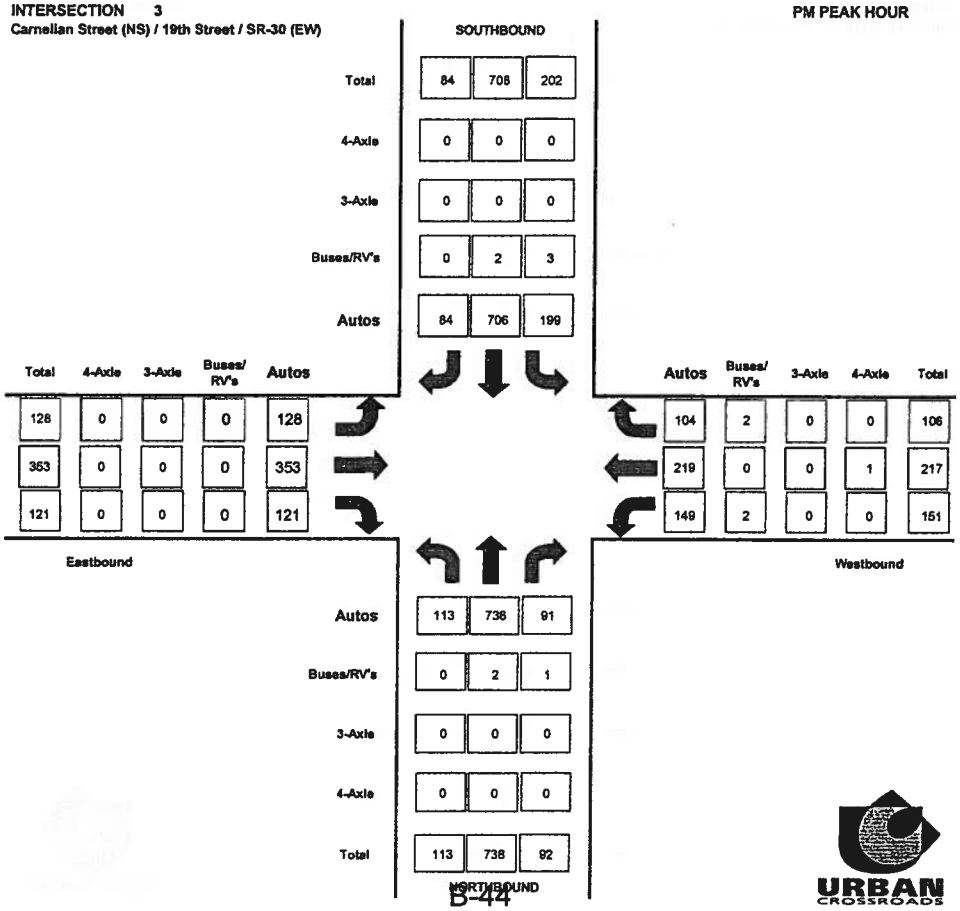

Counts Unlimited Inc.
25286 Jaclyn Avenue
Moreno Valley, CA 92557
951-485-7934

City of Rancho Cucamonga
N/S: Carnelian Street
E/W: 19th Street/SR-30
Weather: Sunny

File Name : RNCCA19AM
Site Code : 9150116
Start Date : 5/27/2009
Page No : 1

Groups Printed- Passenger Vehicles - Large 2 Axle Vehicles - 3 Axle Vehicles - 4+ Axle Trucks

	Carnelian Street Southbound					19th Street/SR-30 Westbound					Carnelian Street Northbound					19th Street/SR-30 Eastbound					
Start Time	Left	Thru	Right	RoR	App. Total	Left	Thru	Right	RoR	App. Total	Left	Thru	Right	RoR	App. Total	Left	Thru	Right	RoR	App. Total	Int. Total
07:00 AM	15	115	14	1	145	37	41	25	15	118	10	148	4	0	162	25	17	11	9	62	487
07:15 AM	22	181	19	0	222	49	64	38	16	167	16	112	6	0	134	43	18	35	8	104	627
07:30 AM	12	219	21	1	253	57	82	43	7	189	26	195	22	0	243	46	24	28	14	112	797
07:45 AM	19	150	20	0	189	46	53	29	6	134	16	123	22	1	162	54	37	17	2	110	595
Total	68	665	74	2	809	189	240	135	44	608	68	578	54	1	701	168	96	91	33	388	2506
08:00 AM	20	125	21	4	170	38	49	26	11	124	19	122	15	1	157	50	38	13	4	105	556
08:15 AM	17	155	18	0	190	31	46	15	12	104	14	118	7	5	144	30	21	9	6	66	504
08:30 AM	22	130	18	2	172	22	43	31	7	103	23	126	9	2	160	19	33	6	7	65	500
08:45 AM	20	162	16	1	199	27	50	14	6	97	14	107	9	1	131	34	30	14	4	82	509
Total	79	572	73	7	731	118	188	86	36	428	70	473	40	9	592	133	122	42	21	318	2069
Grand Total	147	1237	147	9	1540	307	428	221	80	1036	138	1051	94	10	1293	301	218	133	54	706	4575
Apprch %	9.5	80.3	9.5	0.6		29.6	41.3	21.3	7.7		10.7	81.3	7.3	0.8		42.6	30.9	18.8	7.6		
Total %	3.2	27	3.2	0.2	33.7	6.7	9.4	4.8	1.7	22.6	3	23	2.1	0.2	28.3	6.6	4.8	2.9	1.2	15.4	
Passenger Vehicles		1223										1039									
% Passenger Vehicles	99.3	98.9	95.2	100	98.6	97.1	99.1	98.2	100	98.4	99.3	98.9	96.8	100	98.8	99.3	97.7	97.7	98.1	98.4	98.6
Large 2 Axle Vehicles																					
% Large 2 Axle Vehicles	0.7	1	4.1	0	1.2	2.6	0.9	1.8	0	1.5	0	1	3.2	0	1.1	0.7	2.3	2.3	1.9	1.6	1.3
3 Axle Vehicles	0	1	0	0	1	1	0	0	0	1	1	0	0	0	1	0	0	0	0	0	3
% 3 Axle Vehicles	0	0.1	0	0	0.1	0.3	0	0	0	0.1	0.7	0	0	0	0.1	0	0	0	0	0	0.1
4+ Axle Trucks	0	1	1	0	2	0	0	0	0	0	0	1	0	0	1	0	0	0	0	0	3
% 4+ Axle Trucks																					

	Carnelian Street Southbound					19th Street/SR-30 Westbound					Carnelian Street Northbound					19th Street/SR-30 Eastbound					
Start Time	Left	Thru	Right	RoR	App. Total	Left	Thru	Right	RoR	App. Total	Left	Thru	Right	RoR	App. Total	Left	Thru	Right	RoR	App. Total	Int. Total
Peak Hour Analysis From 07:00 AM to 08:45 AM - Peak 1 of 1																					
Peak Hour for Entire Intersection Begins at 07:15 AM																					
07:15 AM	**22**	181	19	0	222	49	64	38	**16**	167	16	112	6	0	134	43	18	**35**	8	104	627
07:30 AM	12	**219**	**21**	1	**253**	**57**	**82**	**43**	7	**189**	**26**	**195**	**22**	0	**243**	46	24	28	**14**	**112**	**797**
07:45 AM	19	150	20	0	189	46	53	29	6	134	16	123	22	**1**	162	**54**	37	17	2	110	595
08:00 AM	20	125	21	**4**	170	38	49	26	11	124	19	122	15	1	157	50	**38**	13	4	105	556
Total Volume	73	675	81	5	834	190	248	136	40	614	77	552	65	2	696	193	117	93	28	431	2575
% App. Total	8.8	80.9	9.7	0.6		30.9	40.4	22.1	6.5		11.1	79.3	9.3	0.3		44.8	27.1	21.6	6.5		
PHF	.830	.771	.964	.313	.824	.833	.756	.791	.625	.812	.740	.708	.739	.500	.716	.894	.770	.664	.500	.962	.808

Counts Unlimited Inc.
25286 Jaclyn Avenue
Moreno Valley, CA 92557
951-485-7934

City of Rancho Cucamonga
N/S: Carnelian Street
E/W: 19th Street/SR-30
Weather: Sunny

File Name : RNCCA19AM
Site Code : 9150116
Start Date : 5/27/2009
Page No : 2

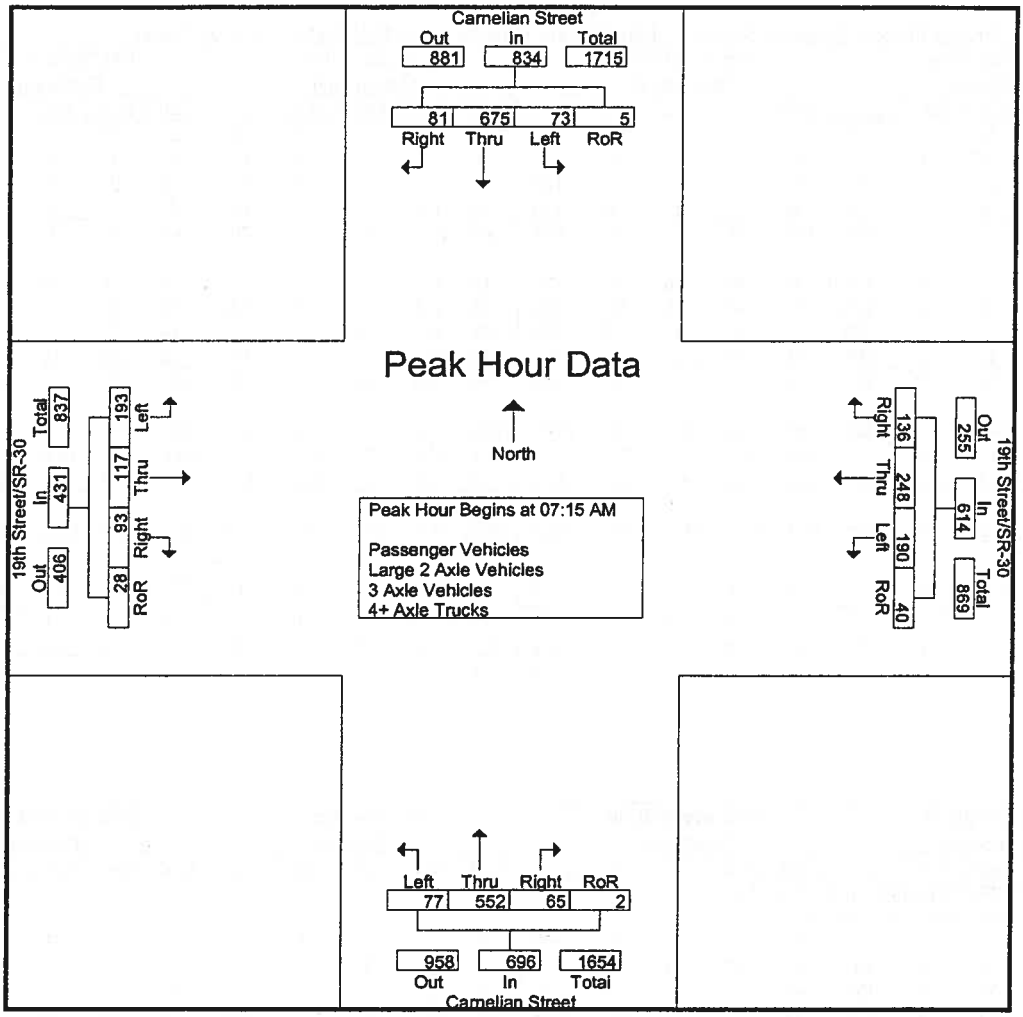

Peak Hour Analysis From 07:00 AM to 08:45 AM - Peak 1 of 1

Peak Hour for Each Approach Begins at:

	07:15 AM					07:15 AM					07:30 AM					07:15 AM				
+0 mins.	**22**	181	19	0	222	49	64	38	**16**	167	**26**	**195**	**22**	0	**243**	43	18	**35**	8	104
+15 mins.	12	**219**	**21**	1	**253**	**57**	**82**	**43**	7	**189**	16	123	22	1	162	46	24	28	**14**	**112**
+30 mins.	19	150	20	0	189	46	53	29	6	134	19	122	15	1	157	**54**	**37**	17	2	110
+45 mins.	20	125	21	**4**	170	38	49	26	11	124	14	118	7	**5**	144	50	**38**	13	4	105
Total Volume	73	675	81	5	834	190	248	136	40	614	75	558	66	7	706	193	117	93	28	431
% App. Total	8.8	80.9	9.7	0.6		30.9	40.4	22.1	6.5		10.6	79	9.3	1		44.8	27.1	21.6	6.5	
PHF	.830	.771	.964	.313	.824	.833	.756	.791	.625	.812	.721	.715	.750	.350	.726	.894	.770	.664	.500	.962

Counts Unlimited Inc.
25286 Jaclyn Avenue
Moreno Valley, CA 92557
951-485-7934

City of Rancho Cucamonga
N/S: Carnelian Street
E/W: 19th Street/SR-30
Weather: Sunny

File Name : RNCCA19AM
Site Code : 9150116
Start Date : 5/27/2009
Page No : 1

Groups Printed- Passenger Vehicles

	Carnelian Street Southbound					19th Street/SR-30 Westbound					Carnelian Street Northbound					19th Street/SR-30 Eastbound					
Start Time	Left	Thru	Right	RoR	App. Total	Left	Thru	Right	RoR	App. Total	Left	Thru	Right	RoR	App. Total	Left	Thru	Right	RoR	App. Total	Int. Total
07:00 AM	15	112	13	1	141	36	40	25	15	116	9	147	3	0	159	25	17	10	8	60	476
07:15 AM	22	178	19	0	219	48	64	38	16	166	16	110	5	0	131	43	18	34	8	103	619
07:30 AM	12	218	21	1	252	54	82	42	7	185	26	190	22	0	238	46	23	28	14	111	786
07:45 AM	18	149	17	0	184	45	53	29	6	133	16	122	21	1	160	53	36	17	2	108	585
Total	67	657	70	2	796	183	239	134	44	600	67	569	51	1	688	167	94	89	32	382	2466
08:00 AM	20	125	20	4	169	37	49	25	11	122	19	121	15	1	156	49	37	12	4	102	549
08:15 AM	17	153	17	0	187	31	46	15	12	104	14	117	7	5	143	30	21	9	6	66	500
08:30 AM	22	129	18	2	171	21	43	30	7	101	23	125	9	2	159	19	31	6	7	63	494
08:45 AM	20	159	15	1	195	26	47	13	6	92	14	107	9	1	131	34	30	14	4	82	500
Total	79	566	70	7	722	115	185	83	36	419	70	470	40	9	589	132	119	41	21	313	2043
Grand Total	146	1223	140	9	1518	298	424	217	80	1019	137	1039	91	10	1277	299	213	130	53	695	4509
Apprch %	9.6	80.6	9.2	0.6		29.2	41.6	21.3	7.9		10.7	81.4	7.1	0.8		43	30.6	18.7	7.6		
Total %	3.2	27.1	3.1	0.2	33.7	6.6	9.4	4.8	1.8	22.6	3	23	2	0.2	28.3	6.6	4.7	2.9	1.2	15.4	

	Carnelian Street Southbound					19th Street/SR-30 Westbound					Carnelian Street Northbound					19th Street/SR-30 Eastbound					
Start Time	Left	Thru	Right	RoR	App. Total		Thru	Right	RoR	App. Total		Thru	Right	RoR	App. Total		Thru	Right	RoR	App. Total	Int. Total
Peak Hour Analysis From 07:15 AM to 08:00 AM - Peak 1 of 1																					
Peak Hour for Entire Intersection Begins at 07:15 AM																					
07:15 AM	**22**	178	19	0	219	48	64	38	16	166	16	110	5	0	131	43	18	**34**	8	103	619
07:30 AM	12	**218**	**21**	1	**252**	**54**	**82**	42	7	**185**	**26**	**190**	**22**	0	**238**	46	23	28	**14**	**111**	**786**
07:45 AM	18	149	17	0	184	45	53	29	6	133	16	122	21	**1**	160	**53**	36	17	2	108	585
08:00 AM	20	125	20	**4**	169	37	49	25	11	122	19	121	15	1	156	49	**37**	12	4	102	549
Total Volume	72	670	77	5	824	184	248	134	40	606	77	543	63	2	685	191	114	91	28	424	2539
% App. Total	8.7	81.3	9.3	0.6		30.4	40.9	22.1	6.6		11.2	79.3	9.2	0.3		45	26.9	21.5	6.6		
PHF	.818	.768	.917	.313	.817	.852	.756	.798	.625	.819	.740	.714	.716	.500	.720	.901	.770	.669	.500	.955	.808

Counts Unlimited Inc.
25286 Jaclyn Avenue
Moreno Valley, CA 92557
951-485-7934

City of Rancho Cucamonga
N/S: Carnelian Street
E/W: 19th Street/SR-30
Weather: Sunny

File Name : RNCCA19AM
Site Code : 9150116
Start Date : 5/27/2009
Page No : 2

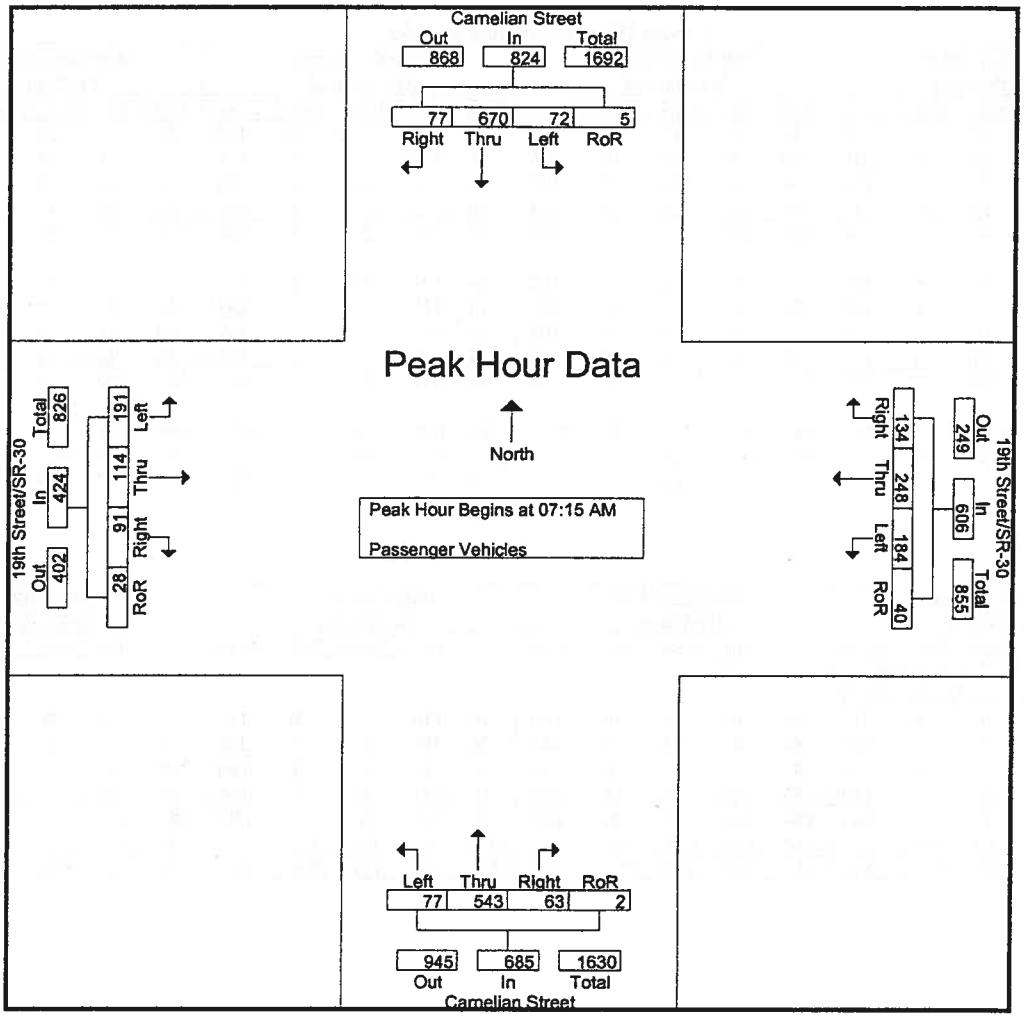

Peak Hour Analysis From 07:15 AM to 08:00 AM - Peak 1 of 1

Peak Hour for Each Approach Begins at:

	07:15 AM					07:15 AM					07:15 AM					07:15 AM				
+0 mins.	**22**	178	19	0	219	48	64	38	**16**	166	16	110	5	0	131	43	18	**34**	8	103
+15 mins.	12	**218**	**21**	1	**252**	**54**	**82**	**42**	7	**185**	**26**	**190**	**22**	0	**238**	46	23	28	**14**	**111**
+30 mins.	18	149	17	0	184	45	53	29	6	133	16	122	21	**1**	160	**53**	36	17	2	108
+45 mins.	20	125	20	4	169	37	49	25	11	122	19	121	15	1	156	49	**37**	12	4	102
Total Volume	72	670	77	5	824	184	248	134	40	606	77	543	63	2	685	191	114	91	28	424
% App. Total	8.7	81.3	9.3	0.6		30.4	40.9	22.1	6.6		11.2	79.3	9.2	0.3		45	26.9	21.5	6.6	
PHF	.818	.768	.917	.313	.817	.852	.756	.798	.625	.819	.740	.714	.716	.500	.720	.901	.770	.669	.500	.955

Counts Unlimited Inc.
25286 Jaclyn Avenue
Moreno Valley, CA 92557
951-485-7934

City of Rancho Cucamonga
N/S: Carnelian Street
E/W: 19th Street/SR-30
Weather: Sunny

File Name : RNCCA19AM
Site Code : 9150116
Start Date : 5/27/2009
Page No : 1

Groups Printed- Large 2 Axle Vehicles

	Carnelian Street Southbound					19th Street/SR-30 Westbound					Carnelian Street Northbound					19th Street/SR-30 Eastbound					
Start Time	Left	Thru	Right	RoR	App. Total	Left	Thru	Right	RoR	App. Total	Left	Thru	Right	RoR	App. Total	Left	Thru	Right	RoR	App. Total	Int. Total
07:00 AM	0	2	1	0	3	0	1	0	0	1	0	1	1	0	2	0	0	1	1	2	8
07:15 AM	0	3	0	0	3	1	0	0	0	1	0	2	1	0	3	0	0	1	0	1	8
07:30 AM	0	1	0	0	1	3	0	1	0	4	0	5	0	0	5	0	1	0	0	1	11
07:45 AM	1	1	2	0	4	1	0	0	0	1	0	1	1	0	2	1	1	0	0	2	9
Total	1	7	3	0	11	5	1	1	0	7	0	9	3	0	12	1	2	2	1	6	36
08:00 AM	0	0	1	0	1	1	0	1	0	2	0	0	0	0	0	1	1	1	0	3	6
08:15 AM	0	2	1	0	3	0	0	0	0	0	0	1	0	0	1	0	0	0	0	0	4
08:30 AM	0	0	0	0	0	1	0	1	0	2	0	1	0	0	1	0	2	0	0	2	5
08:45 AM	0	3	1	0	4	1	3	1	0	5	0	0	0	0	0	0	0	0	0	0	9
Total	0	5	3	0	8	3	3	3	0	9	0	2	0	0	2	1	3	1	0	5	24
Grand Total	1	12	6	0	19	8	4	4	0	16	0	11	3	0	14	2	5	3	1	11	60
Apprch %	5.3	63.2	31.6	0		50	25	25	0		0	78.6	21.4	0		18.2	45.5	27.3	9.1		
Total %	1.7	20	10	0	31.7	13.3	6.7	6.7	0	26.7	0	18.3	5	0	23.3	3.3	8.3	5	1.7	18.3	

	Carnelian Street Southbound					19th Street/SR-30 Westbound					Carnelian Street Northbound					19th Street/SR-30 Eastbound					
Start Time	Left	Thru	Right	RoR	App. Total		Thru	Right	RoR	App. Total		Thru	Right	RoR	App. Total		Thru	Right	RoR	App. Total	Int. Total
Peak Hour Analysis From 07:15 AM to 08:00 AM - Peak 1 of 1																					
Peak Hour for Entire Intersection Begins at 07:15 AM																					
07:15 AM	0	3	0	0	3	1	0	0	0	1	0	2	1	0	3	0	0	1	0	1	8
07:30 AM	0	1	0	0	1	3	0	1	0	4	0	5	0	0	5	0	1	0	0	1	11
07:45 AM	1	1	2	0	4	1	0	0	0	1	0	1	1	0	2	1	1	0	0	2	9
08:00 AM	0	0	1	0	1	1	0	1	0	2	0	0	0	0	0	1	1	1	0	3	6
Total Volume	1	5	3	0	9	6	0	2	0	8	0	8	2	0	10	2	3	2	0	7	34
% App. Total	11.1	55.6	33.3	0		75	0	25	0		0	80	20	0		28.6	42.9	28.6	0		
PHF	.250	.417	.375	.000	.563	.500	.000	.500	.000	.500	.000	.400	.500	.000	.500	.500	.750	.500	.000	.583	.773

Counts Unlimited Inc.
25286 Jaclyn Avenue
Moreno Valley, CA 92557
951-485-7934

City of Rancho Cucamonga
N/S: Carnelian Street
E/W: 19th Street/SR-30
Weather: Sunny

File Name : RNCCA19AM
Site Code : 9150116
Start Date : 5/27/2009
Page No : 2

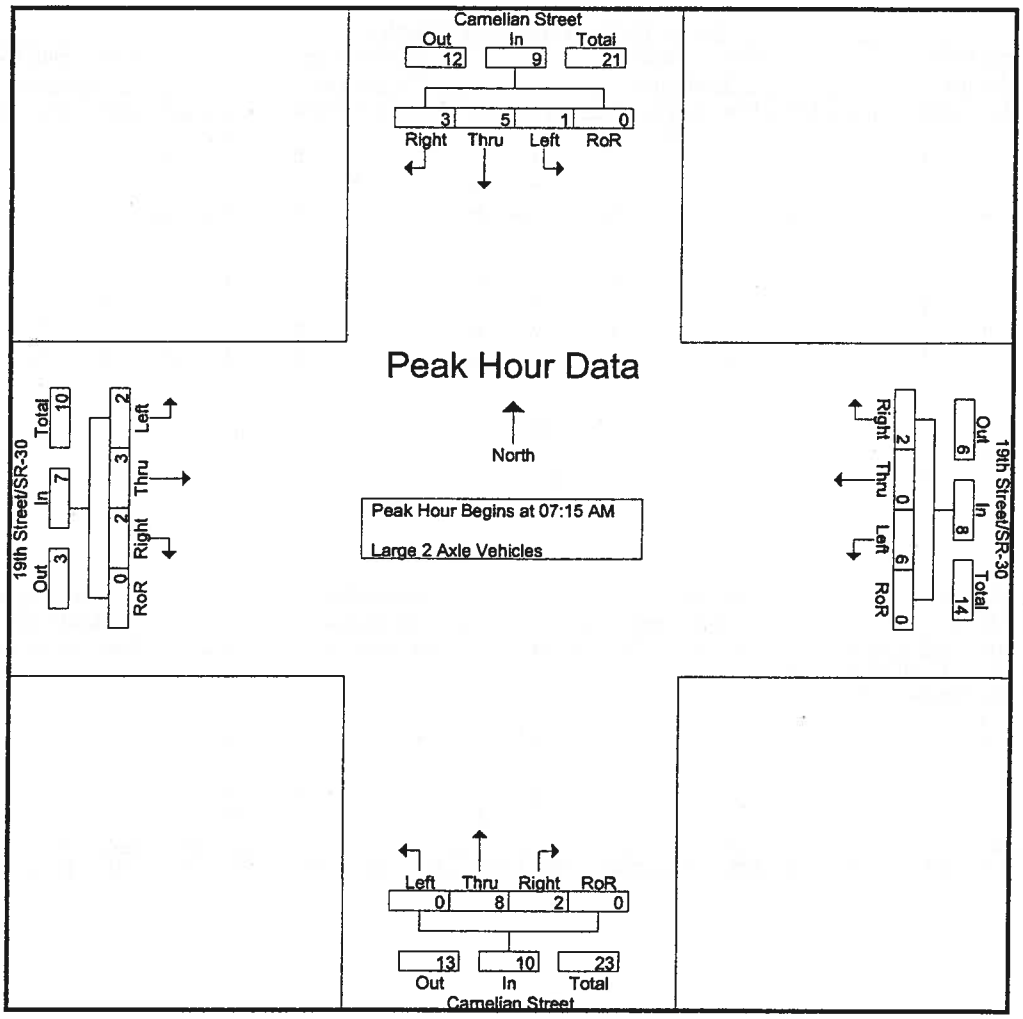

Peak Hour Analysis From 07:15 AM to 08:00 AM - Peak 1 of 1

Peak Hour for Each Approach Begins at:

	07:15 AM					07:15 AM					07:15 AM					07:15 AM				
+0 mins.	0	3	0	0	3	1	0	0	0	1	0	2	1	0	3	0	0	1	0	1
+15 mins.	0	1	0	0	1	3	0	1	0	4	0	5	0	0	5	0	1	0	0	1
+30 mins.	1	1	2	0	4	1	0	0	0	1	0	1	1	0	2	1	1	0	0	2
+45 mins.	0	0	1	0	1	1	0	1	0	2	0	0	0	0	0	1	1	1	0	3
Total Volume	1	5	3	0	9	6	0	2	0	8	0	8	2	0	10	2	3	2	0	7
% App. Total	11.1	55.6	33.3	0		75	0	25	0		0	80	20	0		28.6	42.9	28.6	0	
PHF	.250	.417	.375	.000	.563	.500	.000	.500	.000	.500	.000	.400	.500	.000	.500	.500	.750	.500	.000	.583

Counts Unlimited Inc.
25286 Jaclyn Avenue
Moreno Valley, CA 92557
951-485-7934

City of Rancho Cucamonga
N/S: Carnelian Street
E/W: 19th Street/SR-30
Weather: Sunny

File Name : RNCCA19AM
Site Code : 9150116
Start Date : 5/27/2009
Page No : 1

Groups Printed- 4+ Axle Trucks

	Carnelian Street Southbound					19th Street/SR-30 Westbound					Carnelian Street Northbound					19th Street/SR-30 Eastbound					
Start Time	Left	Thru	Right	RoR	App. Total	Left	Thru	Right	RoR	App. Total	Left	Thru	Right	RoR	App. Total	Left	Thru	Right	RoR	App. Total	Int. Total
07:00 AM	0	0	0	0	0	0	0	0	0	0	0	0	0	0	0	0	0	0	0	0	0
07:15 AM	0	0	0	0	0	0	0	0	0	0	0	0	0	0	0	0	0	0	0	0	0
07:30 AM	0	0	0	0	0	0	0	0	0	0	0	0	0	0	0	0	0	0	0	0	0
07:45 AM	0	0	1	0	1	0	0	0	0	0	0	0	0	0	0	0	0	0	0	0	1
Total	0	0	1	0	1	0	0	0	0	0	0	0	0	0	0	0	0	0	0	0	1
08:00 AM	0	0	0	0	0	0	0	0	0	0	0	1	0	0	1	0	0	0	0	0	1
08:15 AM	0	0	0	0	0	0	0	0	0	0	0	0	0	0	0	0	0	0	0	0	0
08:30 AM	0	1	0	0	1	0	0	0	0	0	0	0	0	0	0	0	0	0	0	0	1
08:45 AM	0	0	0	0	0	0	0	0	0	0	0	0	0	0	0	0	0	0	0	0	0
Total	0	1	0	0	1	0	0	0	0	0	0	1	0	0	1	0	0	0	0	0	2
Grand Total	0	1	1	0	2	0	0	0	0	0	0	1	0	0	1	0	0	0	0	0	3
Apprch %	0	50	50	0		0	0	0	0		0	100	0	0		0	0	0	0		
Total %	0	33.3	33.3	0	66.7	0	0	0	0	0	0	33.3	0	0	33.3	0	0	0	0	0	

	Carnelian Street Southbound					19th Street/SR-30 Westbound					Carnelian Street Northbound					19th Street/SR-30 Eastbound					
Start Time	Left	Thru	Right	RoR	App. Total		Thru	Right	RoR	App. Total		Thru	Right	RoR	App. Total		Thru	Right	RoR	App. Total	Int. Total
Peak Hour Analysis From 07:15 AM to 08:00 AM - Peak 1 of 1																					
Peak Hour for Entire Intersection Begins at 07:15 AM																					
07:15 AM	0	0	0	0	0	0	0	0	0	0	0	0	0	0	0	0	0	0	0	0	0
07:30 AM	0	0	0	0	0	0	0	0	0	0	0	0	0	0	0	0	0	0	0	0	0
07:45 AM	0	0	1	0	1	0	0	0	0	0	0	0	0	0	0	0	0	0	0	0	1
08:00 AM	0	0	0	0	0	0	0	0	0	0	0	1	0	0	1	0	0	0	0	0	1
Total Volume	0	0	1	0	1	0	0	0	0	0	0	1	0	0	1	0	0	0	0	0	2
% App. Total	0	0	100	0		0	0	0	0		0	100	0	0		0	0	0	0		
PHF	.000	.000	.250	.000	.250	.000	.000	.000	.000	.000	.000	.250	.000	.000	.250	.000	.000	.000	.000	.000	.500

Counts Unlimited Inc.
25286 Jaclyn Avenue
Moreno Valley, CA 92557
951-485-7934

City of Rancho Cucamonga
N/S: Carnelian Street
E/W: 19th Street/SR-30
Weather: Sunny

File Name : RNCCA19AM
Site Code : 9150116
Start Date : 5/27/2009
Page No : 2

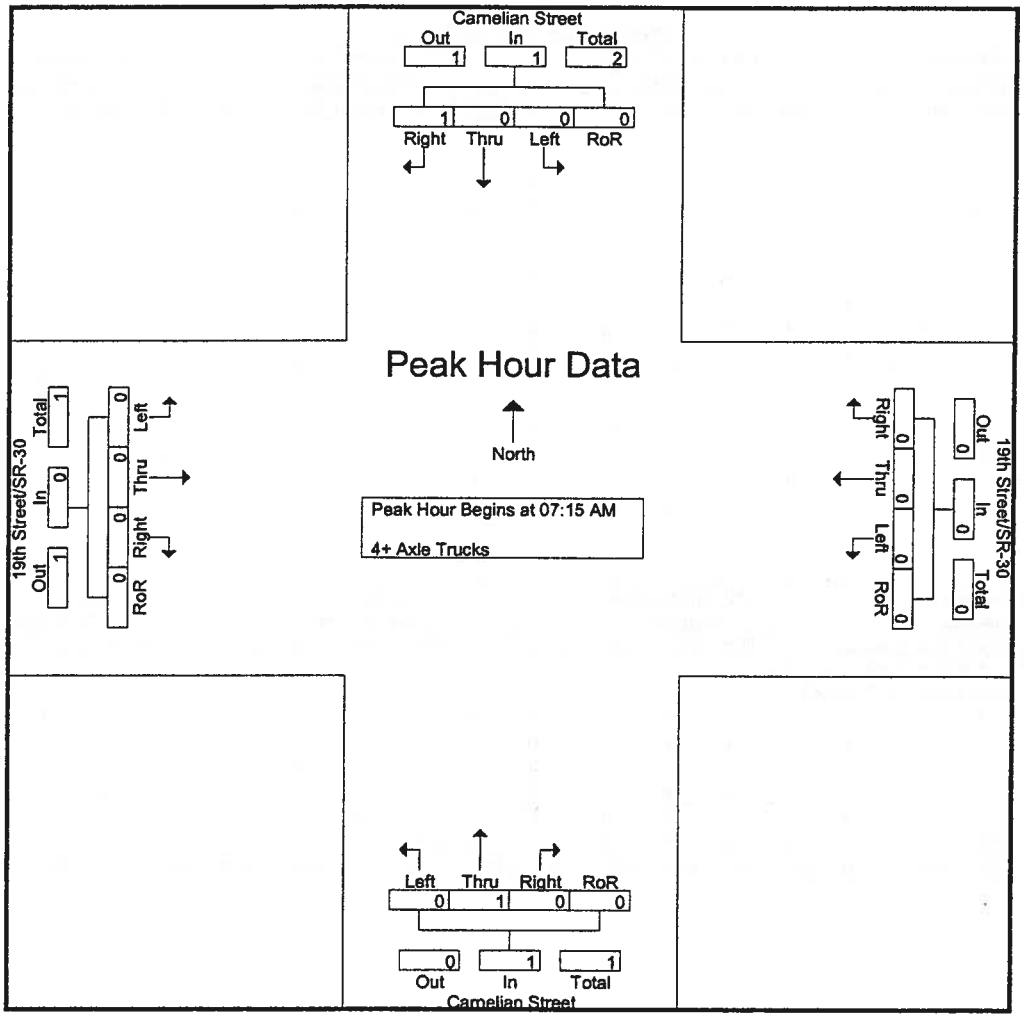

Peak Hour Analysis From 07:15 AM to 08:00 AM - Peak 1 of 1

Peak Hour for Each Approach Begins at:

	07:15 AM					07:15 AM					07:15 AM					07:15 AM				
+0 mins.	0	0	0	0	0	0	0	0	0	0	0	0	0	0	0	0	0	0	0	0
+15 mins.	0	0	0	0	0	0	0	0	0	0	0	0	0	0	0	0	0	0	0	0
+30 mins.	0	0	1	0	1	0	0	0	0	0	0	0	0	0	0	0	0	0	0	0
+45 mins.	0	0	0	0	0	0	0	0	0	0	0	1	0	0	1	0	0	0	0	0
Total Volume	0	0	1	0	1	0	0	0	0	0	0	1	0	0	1	0	0	0	0	0
% App. Total	0	0	100	0		0	0	0	0		0	100	0	0		0	0	0	0	
PHF	.000	.000	.250	.000	.250	.000	.000	.000	.000	.000	.000	.250	.000	.000	.250	.000	.000	.000	.000	.000

Counts Unlimited Inc.
25286 Jaclyn Avenue
Moreno Valley, CA 92557
951-485-7934

City of Rancho Cucamonga
N/S: Carnelian Street
E/W: 19th Street/SR-30
Weather: Sunny

File Name : RNCCA19PM
Site Code : 9150116
Start Date : 5/27/2009
Page No : 1

Groups Printed- Passenger Vehicles - Large 2 Axle Vehicles - 3 Axle Vehicles - 4+ Axle Trucks

	Carnelian Street Southbound					19th Street/SR-30 Westbound					Carnelian Street Northbound					19th Street/SR-30 Eastbound					
Start Time	Left	Thru	Right	RoR	App. Total	Left	Thru	Right	RoR	App. Total	Left	Thru	Right	RoR	App. Total	Left	Thru	Right	RoR	App. Total	Int. Total
04:00 PM	31	143	21	2	197	32	54	15	9	110	29	145	14	3	191	38	76	25	4	143	641
04:15 PM	39	172	25	2	238	33	46	12	7	98	40	169	26	3	238	32	60	25	7	124	698
04:30 PM	39	148	24	2	213	38	54	22	4	118	17	205	16	0	238	31	72	26	9	138	707
04:45 PM	41	177	21	2	241	30	56	23	2	111	25	177	18	1	221	40	98	21	9	168	741
Total	150	640	91	8	889	133	210	72	22	437	111	696	74	7	888	141	306	97	29	573	2787
05:00 PM	55	167	17	2	241	45	52	21	3	121	32	175	24	1	232	32	58	15	12	117	711
05:15 PM	54	182	18	2	256	35	57	20	12	124	27	213	23	1	264	35	88	17	5	145	789
05:30 PM	43	187	23	2	255	40	53	17	5	115	31	156	23	1	211	27	105	30	4	166	747
05:45 PM	50	172	18	2	242	31	55	23	5	114	23	194	19	0	236	34	102	33	5	174	766
Total	202	708	76	8	994	151	217	81	25	474	113	738	89	3	943	128	353	95	26	602	3013
Grand Total	352	1348	167	16	1883	284	427	153	47	911	224	1434	163	10	1831	269	659	192	55	1175	5800
Apprch %	18.7	71.6	8.9	0.8		31.2	46.9	16.8	5.2		12.2	78.3	8.9	0.5		22.9	56.1	16.3	4.7		
Total %	6.1	23.2	2.9	0.3	32.5	4.9	7.4	2.6	0.8	15.7	3.9	24.7	2.8	0.2	31.6	4.6	11.4	3.3	0.9	20.3	
Passenger Vehicles		1342										1430									
% Passenger Vehicles	98.6	99.6	99.4	100	99.4	98.9	99.8	96.7	100	99	99.6	99.7	98.8	100	99.6	99.6	99.8	99.5	100	99.7	99.5
Large 2 Axle Vehicles																					
% Large 2 Axle Vehicles	1.1	0.3	0.6	0	0.5	1.1	0	2.6	0	0.8	0	0.3	1.2	0	0.3	0.4	0.2	0.5	0	0.3	0.4
3 Axle Vehicles	0	1	0	0	1	0	0	0	0	0	1	0	0	0	1	0	0	0	0	0	2
% 3 Axle Vehicles	0	0.1	0	0	0.1	0	0	0	0	0	0.4	0	0	0	0.1	0	0	0	0	0	0
4+ Axle Trucks	1	1	0	0	2	0	1	1	0	2	0	0	0	0	0	0	0	0	0	0	4
% 4+ Axle Trucks																					

	Carnelian Street Southbound					19th Street/SR-30 Westbound					Carnelian Street Northbound					19th Street/SR-30 Eastbound					
Start Time	Left	Thru	Right	RoR	App. Total	Left	Thru	Right	RoR	App. Total	Left	Thru	Right	RoR	App. Total	Left	Thru	Right	RoR	App. Total	Int. Total
Peak Hour Analysis From 04:00 PM to 05:45 PM - Peak 1 of 1																					
Peak Hour for Entire Intersection Begins at 05:00 PM																					
05:00 PM	55	167	17	2	241	45	52	21	3	121	32	175	24	1	232	32	58	15	12	117	711
05:15 PM	54	182	18	2	256	35	57	20	12	124	27	213	23	1	264	35	88	17	5	145	789
05:30 PM	43	187	23	2	255	40	53	17	5	115	31	156	23	1	211	27	105	30	4	166	747
05:45 PM	50	172	18	2	242	31	55	23	5	114	23	194	19	0	236	34	102	33	5	174	766
Total Volume	202	708	76	8	994	151	217	81	25	474	113	738	89	3	943	128	353	95	26	602	3013
% App. Total	20.3	71.2	7.6	0.8		31.9	45.8	17.1	5.3		12	78.3	9.4	0.3		21.3	58.6	15.8	4.3		
PHF	.918	.947	.826	1.000		.839	.952	.880	.521	.956	.883	.866	.927	.750	.893	.914	.840	.720	.542	.865	.955

Counts Unlimited Inc.
25286 Jaclyn Avenue
Moreno Valley, CA 92557
951-485-7934

City of Rancho Cucamonga
N/S: Carnelian Street
E/W: 19th Street/SR-30
Weather: Sunny

File Name : RNCCA19AM
Site Code : 9150116
Start Date : 5/27/2009
Page No : 1

Groups Printed- 3 Axle Vehicles

	Carnelian Street Southbound					19th Street/SR-30 Westbound					Carnelian Street Northbound					19th Street/SR-30 Eastbound					
Start Time	Left	Thru	Right	RoR	App. Total	Left	Thru	Right	RoR	App. Total	Left	Thru	Right	RoR	App. Total	Left	Thru	Right	RoR	App. Total	Int. Total
07:00 AM	0	1	0	0	1	1	0	0	0	1	1	0	0	0	1	0	0	0	0	0	3
07:15 AM	0	0	0	0	0	0	0	0	0	0	0	0	0	0	0	0	0	0	0	0	0
07:30 AM	0	0	0	0	0	0	0	0	0	0	0	0	0	0	0	0	0	0	0	0	0
07:45 AM	0	0	0	0	0	0	0	0	0	0	0	0	0	0	0	0	0	0	0	0	0
Total	0	1	0	0	1	1	0	0	0	1	1	0	0	0	1	0	0	0	0	0	3
08:00 AM	0	0	0	0	0	0	0	0	0	0	0	0	0	0	0	0	0	0	0	0	0
08:15 AM	0	0	0	0	0	0	0	0	0	0	0	0	0	0	0	0	0	0	0	0	0
08:30 AM	0	0	0	0	0	0	0	0	0	0	0	0	0	0	0	0	0	0	0	0	0
08:45 AM	0	0	0	0	0	0	0	0	0	0	0	0	0	0	0	0	0	0	0	0	0
Total	0	0	0	0	0	0	0	0	0	0	0	0	0	0	0	0	0	0	0	0	0
Grand Total	0	1	0	0	1	1	0	0	0	1	1	0	0	0	1	0	0	0	0	0	3
Apprch %	0	100	0	0		100	0	0	0		100	0	0	0		0	0	0	0		
Total %	0	33.3	0	0	33.3	33.3	0	0	0	33.3	33.3	0	0	0	33.3	0	0	0	0	0	

	Carnelian Street Southbound					19th Street/SR-30 Westbound					Carnelian Street Northbound					19th Street/SR-30 Eastbound					
Start Time	Left	Thru	Right	RoR	App. Total		Thru	Right	RoR	App. Total		Thru	Right	RoR	App. Total		Thru	Right	RoR	App. Total	Int. Total
Peak Hour Analysis From 07:15 AM to 08:00 AM - Peak 1 of 1																					
Peak Hour for Entire Intersection Begins at 07:15 AM																					
07:15 AM	0	0	0	0	0	0	0	0	0	0	0	0	0	0	0	0	0	0	0	0	0
07:30 AM	0	0	0	0	0	0	0	0	0	0	0	0	0	0	0	0	0	0	0	0	0
07:45 AM	0	0	0	0	0	0	0	0	0	0	0	0	0	0	0	0	0	0	0	0	0
08:00 AM	0	0	0	0	0	0	0	0	0	0	0	0	0	0	0	0	0	0	0	0	0
Total Volume	0	0	0	0	0	0	0	0	0	0	0	0	0	0	0	0	0	0	0	0	0
% App. Total	0	0	0	0		0	0	0	0		0	0	0	0		0	0	0	0		
PHF	.000	.000	.000	.000	.000	.000	.000	.000	.000	.000	.000	.000	.000	.000	.000	.000	.000	.000	.000	.000	.000

Counts Unlimited Inc.
25286 Jaclyn Avenue
Moreno Valley, CA 92557
951-485-7934

City of Rancho Cucamonga
N/S: Carnelian Street
E/W: 19th Street/SR-30
Weather: Sunny

File Name : RNCCA19AM
Site Code : 9150116
Start Date : 5/27/2009
Page No : 2

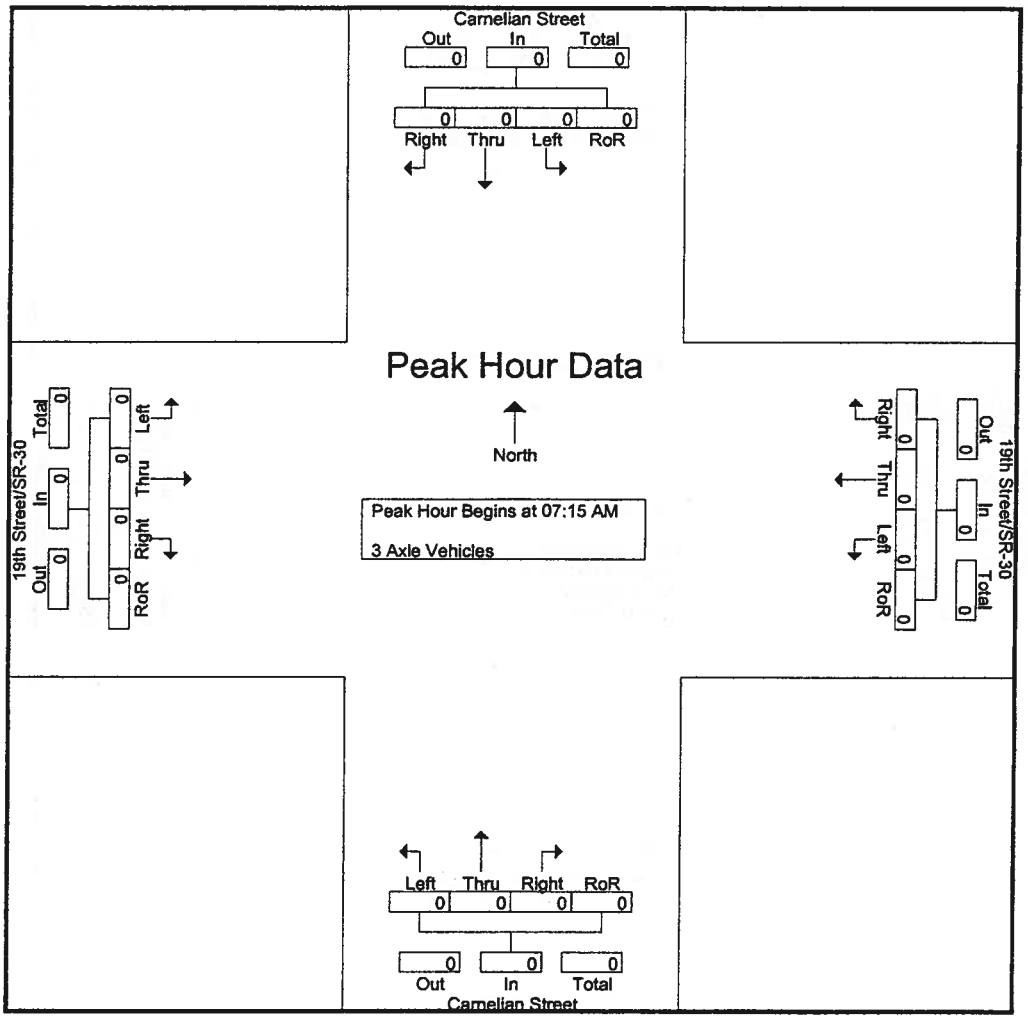

Peak Hour Analysis From 07:15 AM to 08:00 AM - Peak 1 of 1

Peak Hour for Each Approach Begins at:

	07:15 AM					07:15 AM					07:15 AM					07:15 AM				
+0 mins.	0	0	0	0	0	0	0	0	0	0	0	0	0	0	0	0	0	0	0	0
+15 mins.	0	0	0	0	0	0	0	0	0	0	0	0	0	0	0	0	0	0	0	0
+30 mins.	0	0	0	0	0	0	0	0	0	0	0	0	0	0	0	0	0	0	0	0
+45 mins.	0	0	0	0	0	0	0	0	0	0	0	0	0	0	0	0	0	0	0	0
Total Volume	0	0	0	0	0	0	0	0	0	0	0	0	0	0	0	0	0	0	0	0
% App. Total	0	0	0	0		0	0	0	0		0	0	0	0		0	0	0	0	
PHF	.000	.000	.000	.000	.000	.000	.000	.000	.000	.000	.000	.000	.000	.000	.000	.000	.000	.000	.000	.000

Counts Unlimited Inc.
25286 Jaclyn Avenue
Moreno Valley, CA 92557
951-485-7934

City of Rancho Cucamonga
N/S: Carnelian Street
E/W: 19th Street/SR-30
Weather: Sunny

File Name : RNCCA19PM
Site Code : 9150116
Start Date : 5/27/2009
Page No : 2

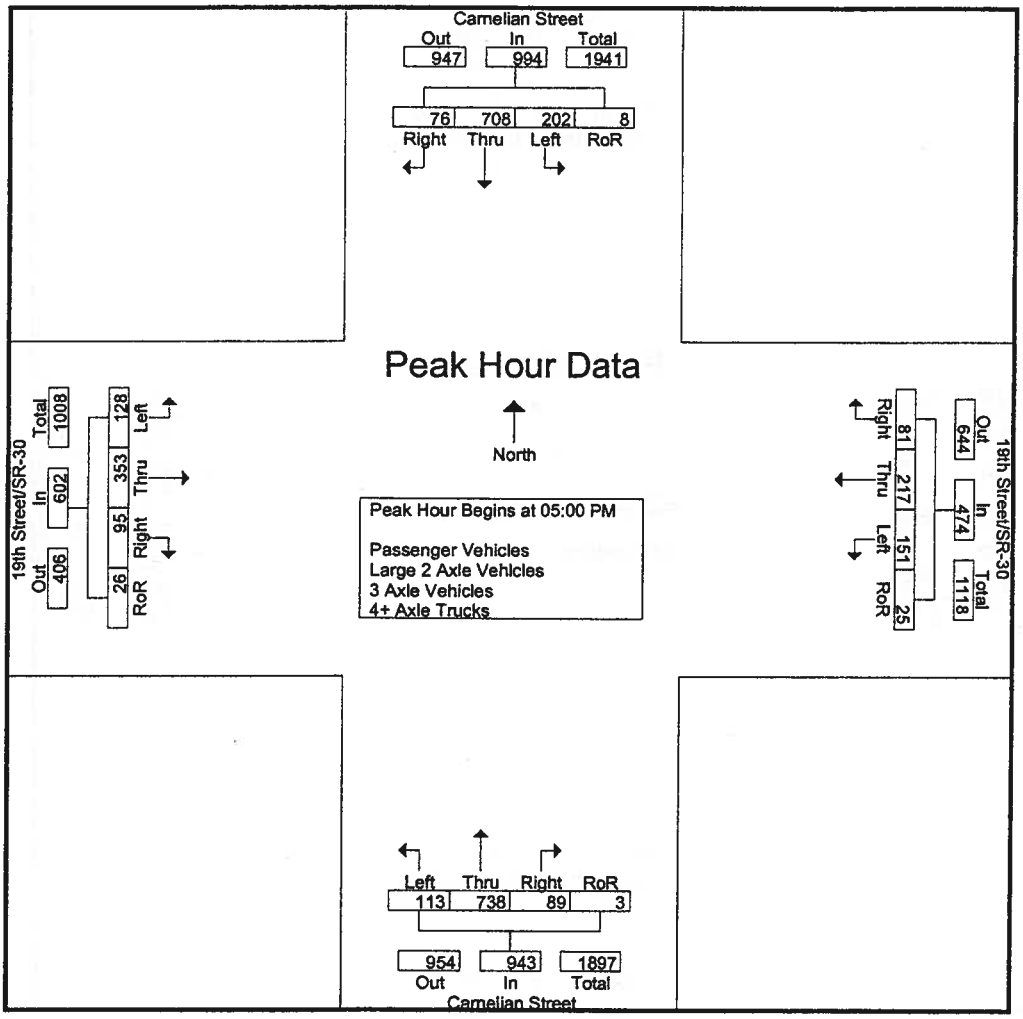

Peak Hour Analysis From 04:00 PM to 05:45 PM - Peak 1 of 1

Peak Hour for Each Approach Begins at:

	05:00 PM					04:30 PM					04:30 PM					05:00 PM				
+0 mins.	**55**	167	17	**2**	241	38	54	22	4	118	17	205	16	**0**	238	32	58	15	**12**	117
+15 mins.	54	182	18	2	**256**	30	56	**23**	2	111	25	177	18	**1**	221	**35**	88	17	5	145
+30 mins.	43	**187**	**23**	2	255	**45**	52	21	3	121	**32**	175	**24**	1	232	27	**105**	30	4	166
+45 mins.	50	172	18	2	242	35	**57**	20	**12**	**124**	27	**213**	23	1	**264**	34	102	**33**	5	**174**
Total Volume	202	708	76	8	994	148	219	86	21	474	101	770	81	3	955	128	353	95	26	602
% App. Total	20.3	71.2	7.6	0.8		31.2	46.2	18.1	4.4		10.6	80.6	8.5	0.3		21.3	58.6	15.8	4.3	
PHF	.918	.947	.826	1.000		.822	.961	.935	.438	.956	.789	.904	.844	.750	.904	.914	.840	.720	.542	.865

Counts Unlimited Inc.
25286 Jaclyn Avenue
Moreno Valley, CA 92557
951-485-7934

City of Rancho Cucamonga
N/S: Carnelian Street
E/W: 19th Street/SR-30
Weather: Sunny

File Name : RNCCA19PM
Site Code : 9150116
Start Date : 5/27/2009
Page No : 1

Groups Printed- Passenger Vehicles

	Carnelian Street Southbound					19th Street/SR-30 Westbound					Carnelian Street Northbound					19th Street/SR-30 Eastbound					
Start Time	Left	Thru	Right	RoR	App. Total	Left	Thru	Right	RoR	App. Total	Left	Thru	Right	RoR	App. Total	Left	Thru	Right	RoR	App. Total	Int. Total
04:00 PM	31	141	21	2	195	31	54	14	9	108	29	145	14	3	191	37	75	25	4	141	635
04:15 PM	39	172	25	2	238	33	46	12	7	98	39	168	26	3	236	32	60	24	7	123	695
04:30 PM	38	147	24	2	211	38	54	21	4	117	17	204	16	0	237	31	72	26	9	138	703
04:45 PM	40	176	20	2	238	30	56	22	2	110	25	177	17	1	220	40	98	21	9	168	736
Total	148	636	90	8	882	132	210	69	22	433	110	694	73	7	884	140	305	96	29	570	2769
05:00 PM	54	167	17	2	240	44	52	19	3	118	32	173	24	1	230	32	58	15	12	117	705
05:15 PM	53	180	18	2	253	35	56	20	12	123	27	213	23	1	264	35	88	17	5	145	785
05:30 PM	43	187	23	2	255	40	53	17	5	115	31	156	22	1	210	27	105	30	4	166	746
05:45 PM	49	172	18	2	241	30	55	23	5	113	23	194	19	0	236	34	102	33	5	174	764
Total	199	706	76	8	989	149	216	79	25	469	113	736	88	3	940	128	353	95	26	602	3000
Grand Total	347	1342	166	16	1871	281	426	148	47	902	223	1430	161	10	1824	268	658	191	55	1172	5769
Apprch %	18.5	71.7	8.9	0.9		31.2	47.2	16.4	5.2		12.2	78.4	8.8	0.5		22.9	56.1	16.3	4.7		
Total %	6	23.3	2.9	0.3	32.4	4.9	7.4	2.6	0.8	15.6	3.9	24.8	2.8	0.2	31.6	4.6	11.4	3.3	1	20.3	

	Carnelian Street Southbound					19th Street/SR-30 Westbound					Carnelian Street Northbound					19th Street/SR-30 Eastbound					
Start Time	Left	Thru	Right	RoR	App. Total		Thru	Right	RoR	App. Total		Thru	Right	RoR	App. Total		Thru	Right	RoR	App. Total	Int. Total
Peak Hour Analysis From 05:00 PM to 05:45 PM - Peak 1 of 1																					
Peak Hour for Entire Intersection Begins at 05:00 PM																					
05:00 PM	54	167	17	2	240	44	52	19	3	118	32	173	24	1	230	32	58	15	12	117	705
05:15 PM	53	180	18	2	253	35	56	20	12	123	27	213	23	1	264	35	88	17	5	145	785
05:30 PM	43	187	23	2	255	40	53	17	5	115	31	156	22	1	210	27	105	30	4	166	746
05:45 PM	49	172	18	2	241	30	55	23	5	113	23	194	19	0	236	34	102	33	5	174	764
Total Volume	199	706	76	8	989	149	216	79	25	469	113	736	88	3	940	128	353	95	26	602	3000
% App. Total	20.1	71.4	7.7	0.8		31.8	46.1	16.8	5.3		12	78.3	9.4	0.3		21.3	58.6	15.8	4.3		
PHF	.921	.944	.826	1.000		.847	.964	.859	.521	.953	.883	.864	.917	.750	.890	.914	.840	.720	.542	.865	.955

Counts Unlimited Inc.
25286 Jaclyn Avenue
Moreno Valley, CA 92557
951-485-7934

City of Rancho Cucamonga
N/S: Carnelian Street
E/W: 19th Street/SR-30
Weather: Sunny

File Name : RNCCA19PM
Site Code : 9150116
Start Date : 5/27/2009
Page No : 2

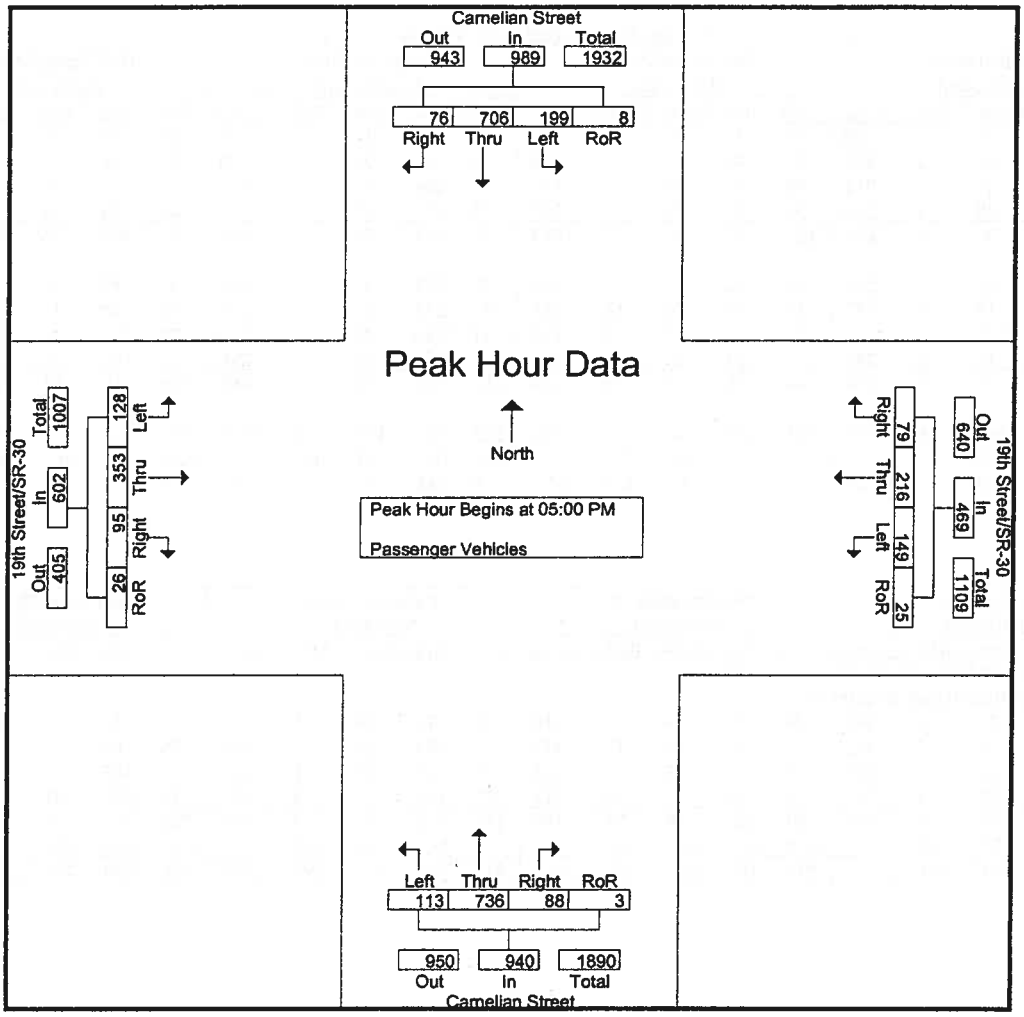

Peak Hour Analysis From 05:00 PM to 05:45 PM - Peak 1 of 1

Peak Hour for Each Approach Begins at:

	05:00 PM					05:00 PM					05:00 PM					05:00 PM				
+0 mins.	**54**	167	17	**2**	240	**44**	52	19	3	118	**32**	173	**24**	**1**	230	32	58	15	**12**	117
+15 mins.	53	180	18	2	253	35	**56**	20	**12**	**123**	27	**213**	23	1	**264**	**35**	88	17	5	145
+30 mins.	43	**187**	**23**	2	**255**	40	53	17	5	115	31	156	22	1	210	27	**105**	30	4	166
+45 mins.	49	172	18	2	241	30	55	**23**	5	113	23	194	19	0	236	34	102	**33**	5	**174**
Total Volume	199	706	76	8	989	149	216	79	25	469	113	736	88	3	940	128	353	95	26	602
% App. Total	20.1	71.4	7.7	0.8		31.8	46.1	16.8	5.3		12	78.3	9.4	0.3		21.3	58.6	15.8	4.3	
PHF	.921	.944	.826	1.000		.847	.964	.859	.521	.953	.883	.864	.917	.750	.890	.914	.840	.720	.542	.865

Counts Unlimited Inc.
25286 Jaclyn Avenue
Moreno Valley, CA 92557
951-485-7934

City of Rancho Cucamonga
N/S: Carnelian Street
E/W: 19th Street/SR-30
Weather: Sunny

File Name : RNCCA19PM
Site Code : 9150116
Start Date : 5/27/2009
Page No : 1

Groups Printed- Large 2 Axle Vehicles

	Carnelian Street Southbound					19th Street/SR-30 Westbound					Carnelian Street Northbound					19th Street/SR-30 Eastbound					
Start Time	Left	Thru	Right	RoR	App. Total	Left	Thru	Right	RoR	App. Total	Left	Thru	Right	RoR	App. Total	Left	Thru	Right	RoR	App. Total	Int. Total
04:00 PM	0	1	0	0	1	1	0	1	0	2	0	0	0	0	0	1	1	0	0	2	5
04:15 PM	0	0	0	0	0	0	0	0	0	0	0	1	0	0	1	0	0	1	0	1	2
04:30 PM	0	0	0	0	0	0	0	0	0	0	0	1	0	0	1	0	0	0	0	0	1
04:45 PM	1	1	1	0	3	0	0	1	0	1	0	0	1	0	1	0	0	0	0	0	5
Total	1	2	1	0	4	1	0	2	0	3	0	2	1	0	3	1	1	1	0	3	13
05:00 PM	1	0	0	0	1	1	0	2	0	3	0	2	0	0	2	0	0	0	0	0	6
05:15 PM	1	2	0	0	3	0	0	0	0	0	0	0	0	0	0	0	0	0	0	0	3
05:30 PM	0	0	0	0	0	0	0	0	0	0	0	0	1	0	1	0	0	0	0	0	1
05:45 PM	1	0	0	0	1	1	0	0	0	1	0	0	0	0	0	0	0	0	0	0	2
Total	3	2	0	0	5	2	0	2	0	4	0	2	1	0	3	0	0	0	0	0	12
Grand Total	4	4	1	0	9	3	0	4	0	7	0	4	2	0	6	1	1	1	0	3	25
Apprch %	44.4	44.4	11.1	0		42.9	0	57.1	0		0	66.7	33.3	0		33.3	33.3	33.3	0		
Total %	16	16	4	0	36	12	0	16	0	28	0	16	8	0	24	4	4	4	0	12	

	Carnelian Street Southbound					19th Street/SR-30 Westbound					Carnelian Street Northbound					19th Street/SR-30 Eastbound					
Start Time	Left	Thru	Right	RoR	App. Total		Thru	Right	RoR	App. Total		Thru	Right	RoR	App. Total		Thru	Right	RoR	App. Total	Int. Total
Peak Hour Analysis From 05:00 PM to 05:45 PM - Peak 1 of 1																					
Peak Hour for Entire Intersection Begins at 05:00 PM																					
05:00 PM	1	0	0	0	1	1	0	2	0	3	0	2	0	0	2	0	0	0	0	0	6
05:15 PM	1	2	0	0	3	0	0	0	0	0	0	0	0	0	0	0	0	0	0	0	3
05:30 PM	0	0	0	0	0	0	0	0	0	0	0	0	1	0	1	0	0	0	0	0	1
05:45 PM	1	0	0	0	1	1	0	0	0	1	0	0	0	0	0	0	0	0	0	0	2
Total Volume	3	2	0	0	5	2	0	2	0	4	0	2	1	0	3	0	0	0	0	0	12
% App. Total	60	40	0	0		50	0	50	0		0	66.7	33.3	0		0	0	0	0		
PHF	.750	.250	.000	.000	.417	.500	.000	.250	.000	.333	.000	.250	.250	.000	.375	.000	.000	.000	.000	.000	.500

Counts Unlimited Inc.
25286 Jaclyn Avenue
Moreno Valley, CA 92557
951-485-7934

City of Rancho Cucamonga
N/S: Carnelian Street
E/W: 19th Street/SR-30
Weather: Sunny

File Name : RNCCA19PM
Site Code : 9150116
Start Date : 5/27/2009
Page No : 2

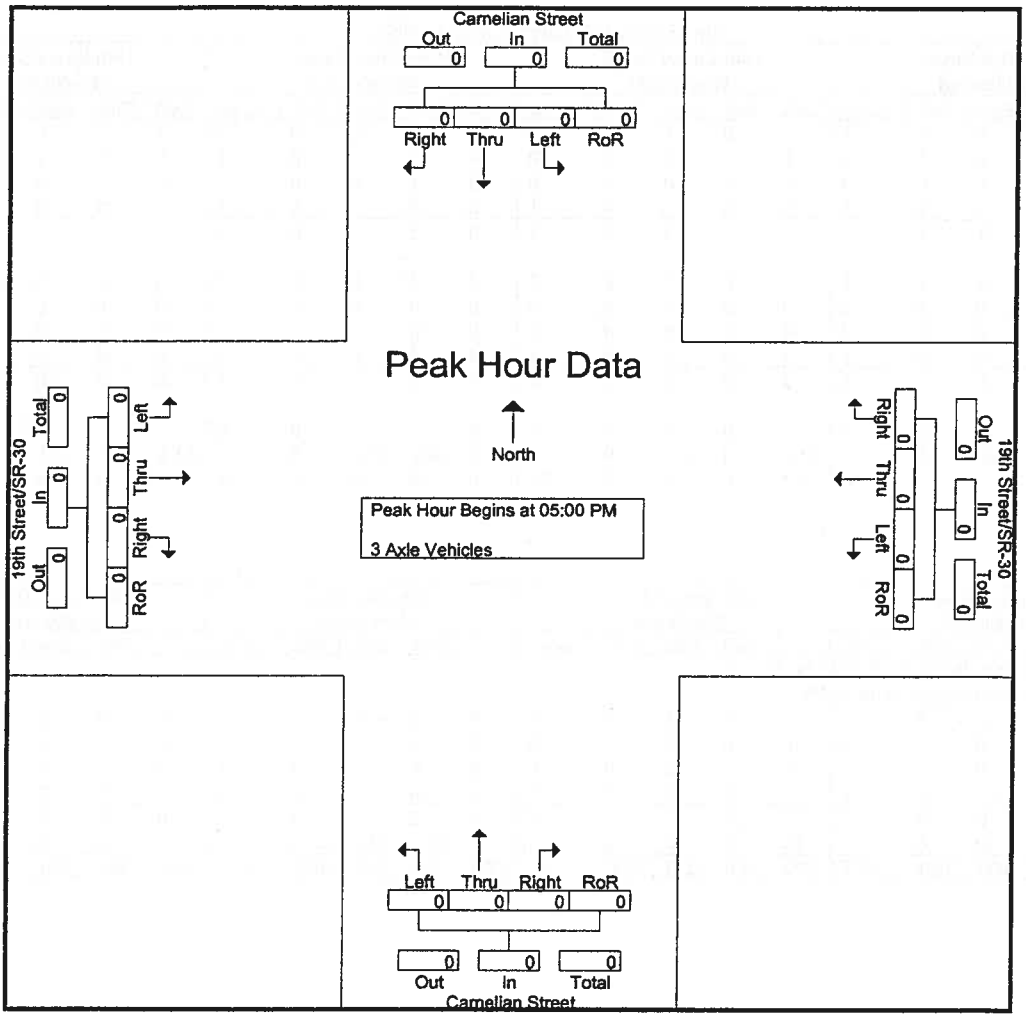

Peak Hour Analysis From 05:00 PM to 05:45 PM - Peak 1 of 1

Peak Hour for Each Approach Begins at:

	05:00 PM					05:00 PM					05:00 PM					05:00 PM				
+0 mins.	0	0	0	0	0	0	0	0	0	0	0	0	0	0	0	0	0	0	0	0
+15 mins.	0	0	0	0	0	0	0	0	0	0	0	0	0	0	0	0	0	0	0	0
+30 mins.	0	0	0	0	0	0	0	0	0	0	0	0	0	0	0	0	0	0	0	0
+45 mins.	0	0	0	0	0	0	0	0	0	0	0	0	0	0	0	0	0	0	0	0
Total Volume	0	0	0	0	0	0	0	0	0	0	0	0	0	0	0	0	0	0	0	0
% App. Total	0	0	0	0		0	0	0	0		0	0	0	0		0	0	0	0	
PHF	.000	.000	.000	.000	.000	.000	.000	.000	.000	.000	.000	.000	.000	.000	.000	.000	.000	.000	.000	.000

Counts Unlimited Inc.
25286 Jaclyn Avenue
Moreno Valley, CA 92557
951-485-7934

City of Rancho Cucamonga
N/S: Carnelian Street
E/W: 19th Street/SR-30
Weather: Sunny

File Name : RNCCA19PM
Site Code : 9150116
Start Date : 5/27/2009
Page No : 1

Groups Printed- 4+ Axle Trucks

	Carnelian Street Southbound					19th Street/SR-30 Westbound					Carnelian Street Northbound					19th Street/SR-30 Eastbound					
Start Time	Left	Thru	Right	RoR	App. Total	Left	Thru	Right	RoR	App. Total	Left	Thru	Right	RoR	App. Total	Left	Thru	Right	RoR	App. Total	Int. Total
04:00 PM	0	0	0	0	0	0	0	0	0	0	0	0	0	0	0	0	0	0	0	0	0
04:15 PM	0	0	0	0	0	0	0	0	0	0	0	0	0	0	0	0	0	0	0	0	0
04:30 PM	1	1	0	0	2	0	0	1	0	1	0	0	0	0	0	0	0	0	0	0	3
04:45 PM	0	0	0	0	0	0	0	0	0	0	0	0	0	0	0	0	0	0	0	0	0
Total	1	1	0	0	2	0	0	1	0	1	0	0	0	0	0	0	0	0	0	0	3
05:00 PM	0	0	0	0	0	0	0	0	0	0	0	0	0	0	0	0	0	0	0	0	0
05:15 PM	0	0	0	0	0	0	1	0	0	1	0	0	0	0	0	0	0	0	0	0	1
05:30 PM	0	0	0	0	0	0	0	0	0	0	0	0	0	0	0	0	0	0	0	0	0
05:45 PM	0	0	0	0	0	0	0	0	0	0	0	0	0	0	0	0	0	0	0	0	0
Total	0	0	0	0	0	0	1	0	0	1	0	0	0	0	0	0	0	0	0	0	1
Grand Total	1	1	0	0	2	0	1	1	0	2	0	0	0	0	0	0	0	0	0	0	4
Apprch %	50	50	0	0		0	50	50	0		0	0	0	0		0	0	0	0		
Total %	25	25	0	0	50	0	25	25	0	50	0	0	0	0	0	0	0	0	0	0	

	Carnelian Street Southbound					19th Street/SR-30 Westbound					Carnelian Street Northbound					19th Street/SR-30 Eastbound					
Start Time	Left	Thru	Right	RoR	App. Total	Left	Thru	Right	RoR	App. Total	Left	Thru	Right	RoR	App. Total	Left	Thru	Right	RoR	App. Total	Int. Total
Peak Hour Analysis From 05:00 PM to 05:45 PM - Peak 1 of 1																					
Peak Hour for Entire Intersection Begins at 05:00 PM																					
05:00 PM	0	0	0	0	0	0	0	0	0	0	0	0	0	0	0	0	0	0	0	0	0
05:15 PM	0	0	0	0	0	0	1	0	0	1	0	0	0	0	0	0	0	0	0	0	1
05:30 PM	0	0	0	0	0	0	0	0	0	0	0	0	0	0	0	0	0	0	0	0	0
05:45 PM	0	0	0	0	0	0	0	0	0	0	0	0	0	0	0	0	0	0	0	0	0
Total Volume	0	0	0	0	0	0	1	0	0	1	0	0	0	0	0	0	0	0	0	0	1
% App. Total	0	0	0	0		0	100	0	0		0	0	0	0		0	0	0	0		
PHF	.000	.000	.000	.000	.000	.000	.250	.000	.000	.250	.000	.000	.000	.000	.000	.000	.000	.000	.000	.000	.250

Counts Unlimited Inc.
25286 Jaclyn Avenue
Moreno Valley, CA 92557
951-485-7934

City of Rancho Cucamonga
N/S: Carnelian Street
E/W: 19th Street/SR-30
Weather: Sunny

File Name : RNCCA19PM
Site Code : 9150116
Start Date : 5/27/2009
Page No : 2

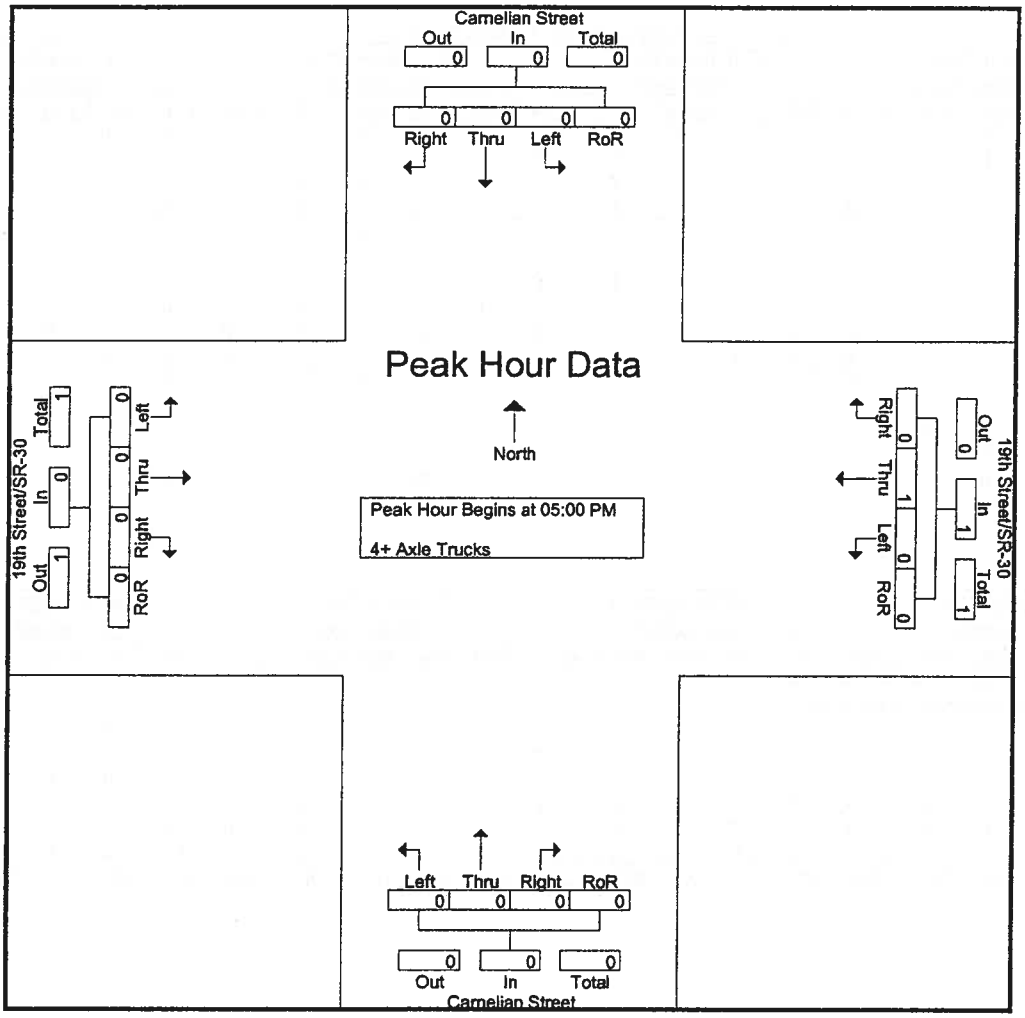

Peak Hour Analysis From 05:00 PM to 05:45 PM - Peak 1 of 1

Peak Hour for Each Approach Begins at:

	05:00 PM					05:00 PM					05:00 PM					05:00 PM				
+0 mins.	0	0	0	0	0	0	0	0	0	0	0	0	0	0	0	0	0	0	0	0
+15 mins.	0	0	0	0	0	0	1	0	0	1	0	0	0	0	0	0	0	0	0	0
+30 mins.	0	0	0	0	0	0	0	0	0	0	0	0	0	0	0	0	0	0	0	0
+45 mins.	0	0	0	0	0	0	0	0	0	0	0	0	0	0	0	0	0	0	0	0
Total Volume	0	0	0	0	0	0	1	0	0	1	0	0	0	0	0	0	0	0	0	0
% App. Total	0	0	0	0		0	100	0	0		0	0	0	0		0	0	0	0	
PHF	.000	.000	.000	.000	.000	.000	.250	.000	.000	.250	.000	.000	.000	.000	.000	.000	.000	.000	.000	.000

PASSENGER CAR EQUIVALENCY PEAK HOUR COUNT SUMMARY

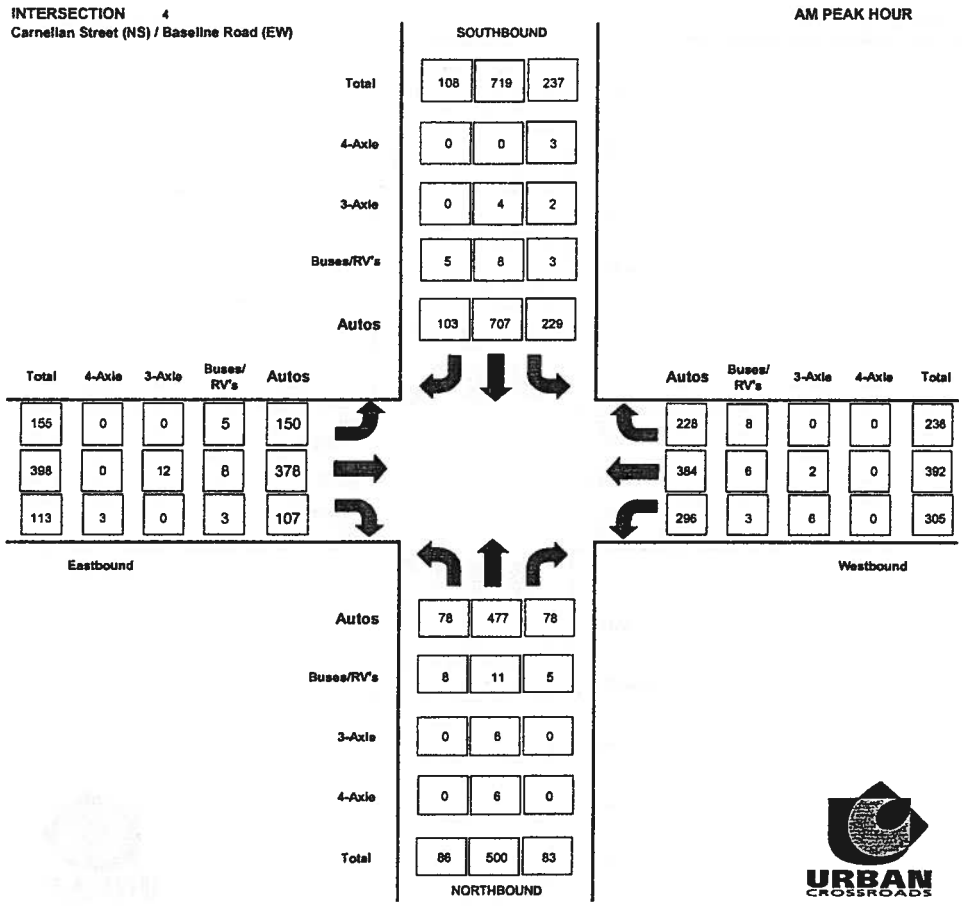

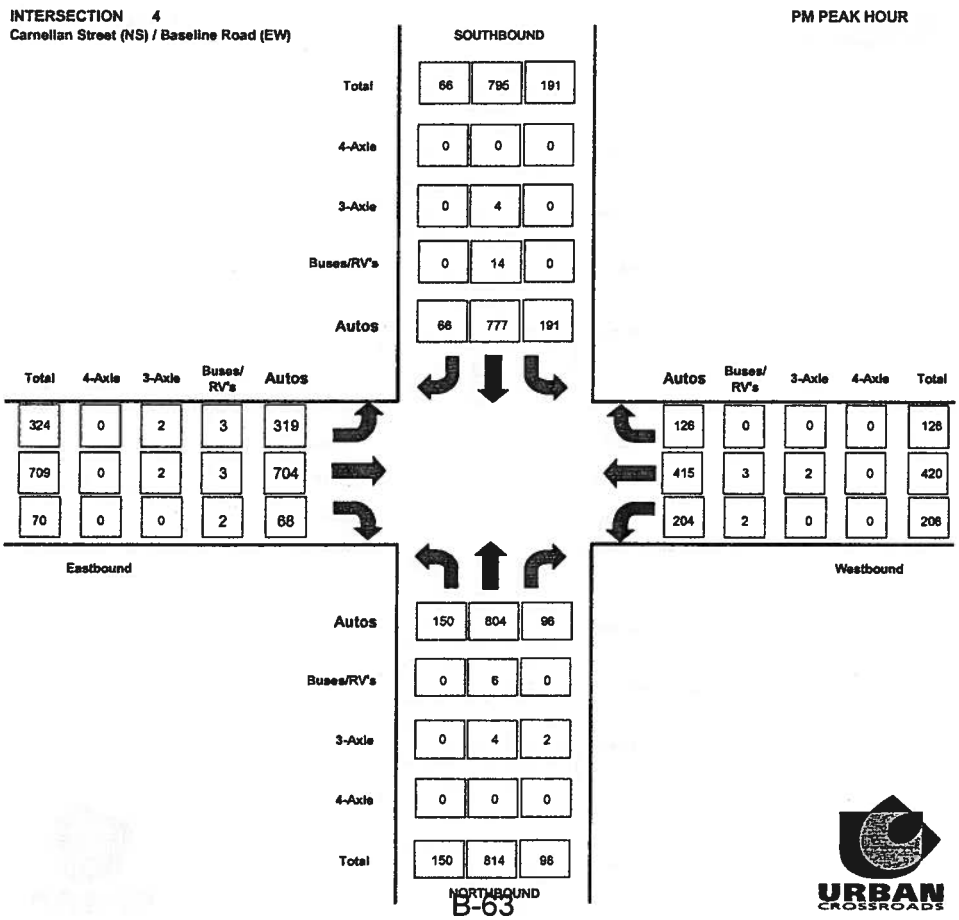

RAW PEAK HOUR COUNT SUMMARY

INTERSECTION 4
Carnelian Street (NS) / Baseline Road (EW)

AM PEAK HOUR

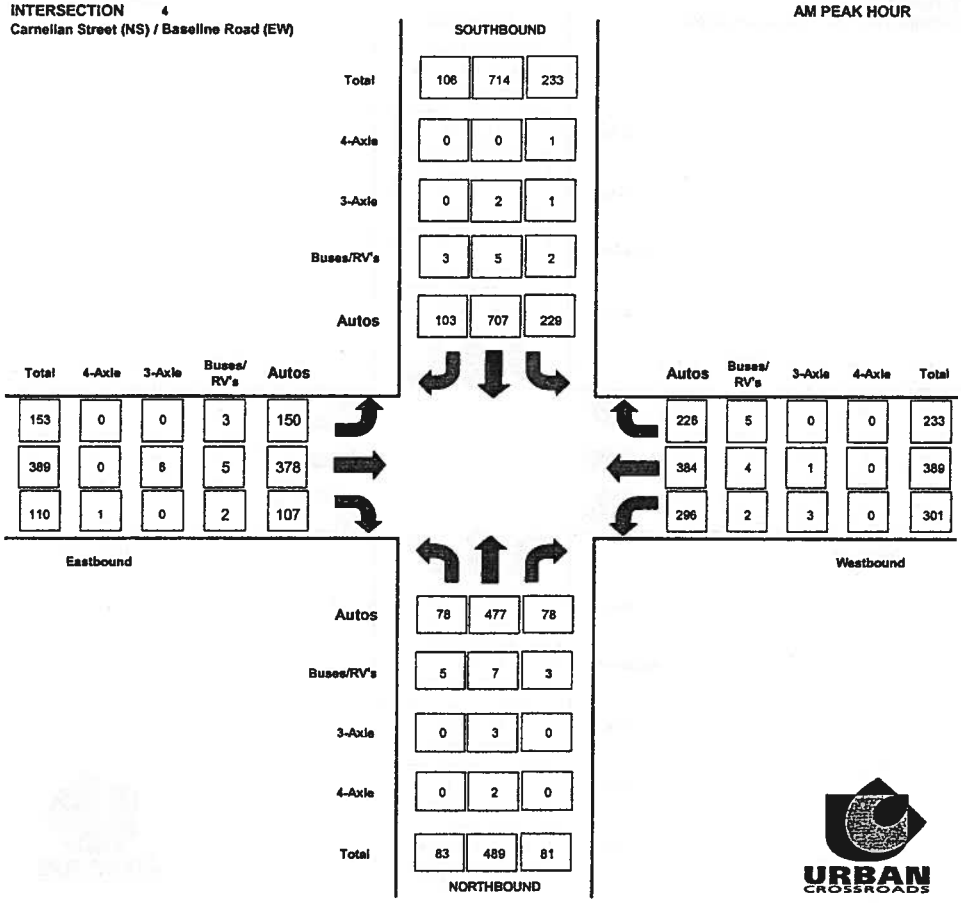

INTERSECTION 4
Carnelian Street (NS) / Baseline Road (EW)

PM PEAK HOUR

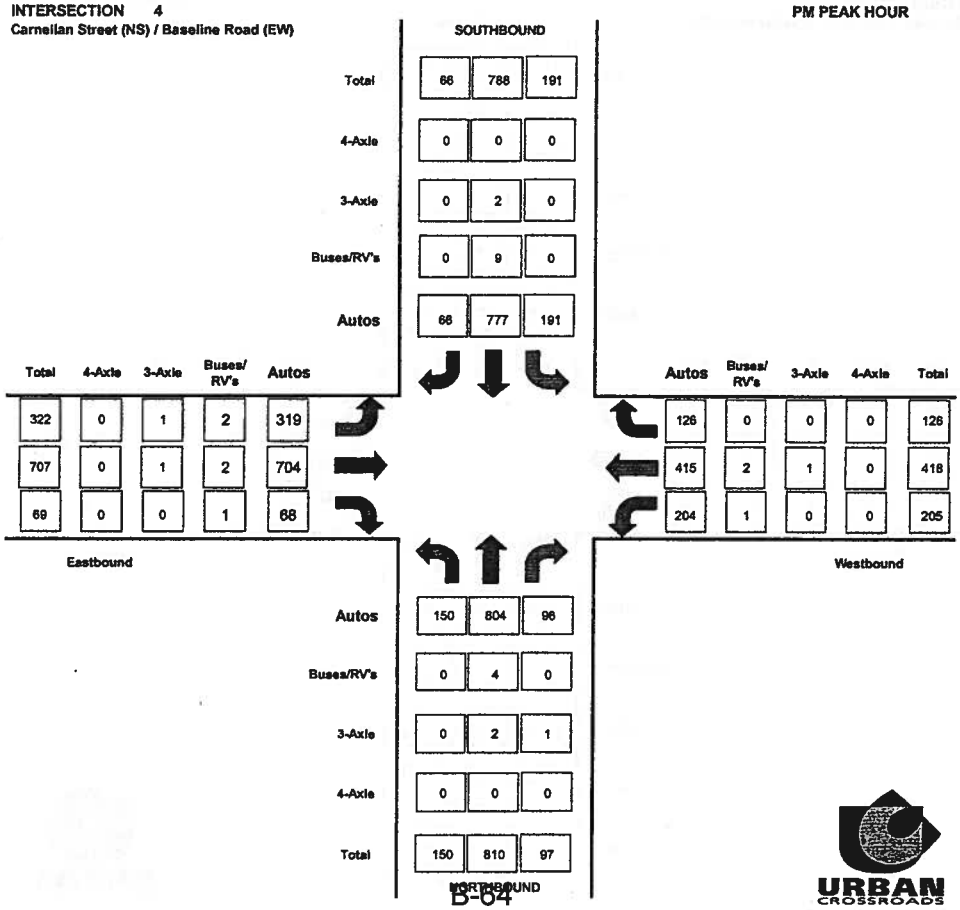

Counts Unlimited Inc.
25286 Jaclyn Avenue
Moreno Valley, CA 92557
951-485-7934

4

City of Rancho Cucamonga
N/S: Carnelian Street
E/W: Baseline Road
Weather: Sunny

File Name : RNCCABAAM
Site Code : 9150024
Start Date : 6/2/2009
Page No : 1

Groups Printed- Passenger Vehicles - Large 2 Axle Vehicles - 3 Axle Vehicles - 4+ Axle Trucks

	Carnelian Street Southbound					Baseline Road Westbound					Carnelian Street Northbound					Baseline Road Eastbound					
Start Time	Left	Thru	Right	RoR	App. Total	Left	Thru	Right	RoR	App. Total	Left	Thru	Right	RoR	App. Total	Left	Thru	Right	RoR	App. Total	Int. Total
07:00 AM	38	105	25	0	168	39	96	25	4	164	14	97	16	2	129	26	47	17	6	96	557
07:15 AM	59	167	24	3	253	80	103	43	20	246	22	131	33	0	186	38	82	26	3	149	834
07:30 AM	100	153	27	0	280	125	114	60	31	330	24	140	33	2	199	46	127	21	5	199	1008
07:45 AM	44	203	27	1	275	60	102	38	25	225	15	130	7	1	153	37	107	26	9	179	832
Total	241	628	103	4	976	304	415	166	80	965	75	498	89	5	667	147	363	90	23	623	3231
08:00 AM	30	191	24	0	245	36	70	11	5	122	22	88	5	0	115	32	73	15	5	125	607
08:15 AM	34	170	25	0	229	29	70	8	6	113	14	90	13	0	117	24	68	17	8	117	576
08:30 AM	32	155	22	1	210	47	64	16	3	130	15	137	12	1	165	26	45	18	5	94	599
08:45 AM	35	156	25	1	217	40	83	7	3	133	19	127	22	2	170	43	72	23	4	142	662
Total	131	672	96	2	901	152	287	42	17	498	70	442	52	3	567	125	258	73	22	478	2444
Grand Total	372	1300	199	6	1877	456	702	208	97	1463	145	940	141	8	1234	272	621	163	45	1101	5675
Apprch %	19.8	69.3	10.6	0.3		31.2	48	14.2	6.6		11.8	76.2	11.4	0.6		24.7	56.4	14.8	4.1		
Total %	6.6	22.9	3.5	0.1	33.1	8	12.4	3.7	1.7	25.8	2.6	16.6	2.5	0.1	21.7	4.8	10.9	2.9	0.8	19.4	
Passenger Vehicles		1284																			
% Passenger Vehicles	98.1	98.8	97	100	98.5	97.1	97.4	97.6	96.9	97.3	94.5	97.3	97.2	100	97	96.7	97.1	95.7	97.8	96.8	97.5
Large 2 Axle Vehicles																					
% Large 2 Axle Vehicles	1.3	0.8	2.5	0	1.1	1.1	2.1	1.4	3.1	1.8	4.8	1.9	2.8	0	2.4	2.6	1.6	1.8	0	1.8	1.7
3 Axle Vehicles	1	5	1	0	7	6	2	1	0	9	0	3	0	0	3	1	8	2	1	12	31
% 3 Axle Vehicles	0.3	0.4	0.5	0	0.4	1.3	0.3	0.5	0	0.6	0	0.3	0	0	0.2	0.4	1.3	1.2	2.2	1.1	0.5
4+ Axle Trucks	1	0	0	0	1	2	1	1	0	4	1	4	0	0	5	1	0	2	0	3	13
% 4+ Axle Trucks																					

	Carnelian Street Southbound					Baseline Road Westbound					Carnelian Street Northbound					Bascline Road Eastbound					
Start Time	Left	Thru	Right	RoR	App. Total	Left	Thru	Right	RoR	App. Total	Left	Thru	Right	RoR	App. Total	Left	Thru	Right	RoR	App. Total	Int. Total
Peak Hour Analysis From 07:00 AM to 08:45 AM - Peak 1 of 1																					
Peak Hour for Entire Intersection Begins at 07:15 AM																					
07:15 AM	59	167	24	**3**	253	80	103	43	20	246	22	131	**33**	0	186	38	82	**26**	3	149	834
07:30 AM	**100**	153	**27**	0	**280**	**125**	**114**	**60**	**31**	**330**	**24**	**140**	33	**2**	**199**	**46**	**127**	21	5	**199**	**1008**
07:45 AM	44	**203**	27	1	275	60	102	38	25	225	15	130	7	1	153	37	107	26	**9**	179	832
08:00 AM	30	191	24	0	245	36	70	11	5	122	22	88	5	0	115	32	73	15	5	125	607
Total Volume	233	714	102	4	1053	301	389	152	81	923	83	489	78	3	653	153	389	88	22	652	3281
% App. Total	22.1	67.8	9.7	0.4		32.6	42.1	16.5	8.8		12.7	74.9	11.9	0.5		23.5	59.7	13.5	3.4		
PHF	.583	.879	.944	.333	.940	.602	.853	.633	.653	.699	.865	.873	.591	.375	.820	.832	.766	.846	.611	.819	.814

Counts Unlimited Inc.
25286 Jaclyn Avenue
Moreno Valley, CA 92557
951-485-7934

City of Rancho Cucamonga
N/S: Carnelian Street
E/W: Baseline Road
Weather: Sunny

File Name : RNCCABAAM
Site Code : 9150024
Start Date : 6/2/2009
Page No : 2

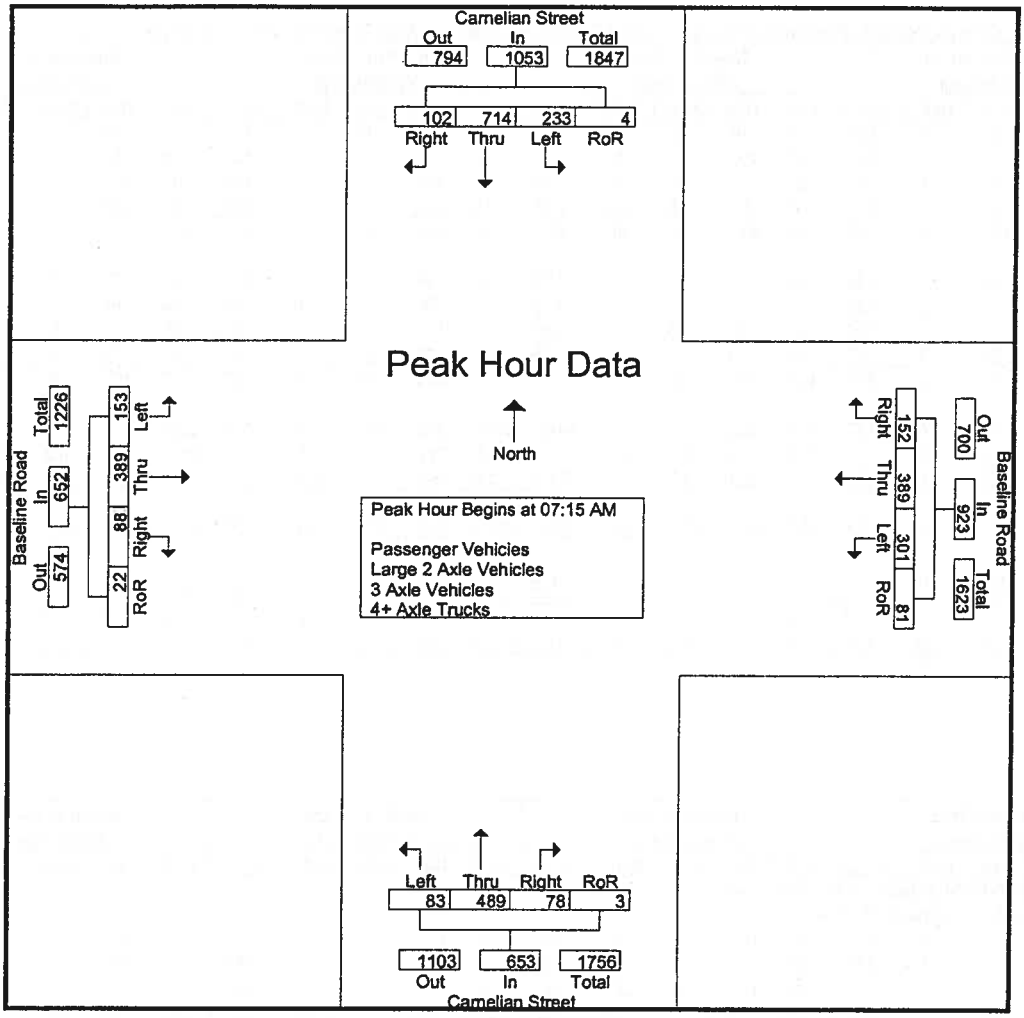

Peak Hour Analysis From 07:00 AM to 08:45 AM - Peak 1 of 1

Peak Hour for Each Approach Begins at:

	07:15 AM					07:00 AM					07:00 AM					07:15 AM				
+0 mins.	59	167	24	3	253	39	96	25	4	164	14	97	16	2	129	38	82	26	3	149
+15 mins.	100	153	27	0	280	80	103	43	20	246	22	131	33	0	186	46	127	21	5	199
+30 mins.	44	203	27	1	275	125	114	60	31	330	24	140	33	2	199	37	107	26	9	179
+45 mins.	30	191	24	0	245	60	102	38	25	225	15	130	7	1	153	32	73	15	5	125
Total Volume	233	714	102	4	1053	304	415	166	80	965	75	498	89	5	667	153	389	88	22	652
% App. Total	22.1	67.8	9.7	0.4		31.5	43	17.2	8.3		11.2	74.7	13.3	0.7		23.5	59.7	13.5	3.4	
PHF	.583	.879	.944	.333	.940	.608	.910	.692	.645	.731	.781	.889	.674	.625	.838	.832	.766	.846	.611	.819

Counts Unlimited Inc.
25286 Jaclyn Avenue
Moreno Valley, CA 92557
951-485-7934

City of Rancho Cucamonga
N/S: Carnelian Street
E/W: Baseline Road
Weather: Sunny

File Name : RNCCABAAM
Site Code : 9150024
Start Date : 6/2/2009
Page No : 1

Groups Printed- Passenger Vehicles

	Carnelian Street Southbound					Baseline Road Westbound					Carnelian Street Northbound					Baseline Road Eastbound					
Start Time	Left	Thru	Right	RoR	App. Total	Left	Thru	Right	RoR	App. Total	Left	Thru	Right	RoR	App. Total	Left	Thru	Right	RoR	App. Total	Int. Total
07:00 AM	36	105	25	0	166	32	93	24	4	153	14	95	16	2	127	26	45	13	5	89	535
07:15 AM	57	164	24	3	248	76	103	42	19	240	19	129	31	0	179	36	78	26	3	143	810
07:30 AM	100	152	27	0	279	125	114	59	30	328	23	136	32	2	193	46	124	20	5	195	995
07:45 AM	43	203	25	1	272	59	98	37	25	219	14	129	7	1	151	36	106	25	9	176	818
Total	236	624	101	4	965	292	408	162	78	940	70	489	86	5	650	144	353	84	22	603	3158
08:00 AM	29	188	23	0	240	36	69	11	5	121	22	83	5	0	110	32	70	14	5	121	592
08:15 AM	34	167	24	0	225	29	68	8	6	111	12	88	13	0	113	23	65	17	8	113	562
08:30 AM	31	153	20	1	205	46	60	15	3	124	14	129	11	1	155	24	45	18	5	92	576
08:45 AM	35	152	25	1	213	40	79	7	2	128	19	126	22	2	169	40	70	23	4	137	647
Total	129	660	92	2	883	151	276	41	16	484	67	426	51	3	547	119	250	72	22	463	2377
Grand Total	365	1284	193	6	1848	443	684	203	94	1424	137	915	137	8	1197	263	603	156	44	1066	5535
Apprch %	19.8	69.5	10.4	0.3		31.1	48	14.3	6.6		11.4	76.4	11.4	0.7		24.7	56.6	14.6	4.1		
Total %	6.6	23.2	3.5	0.1	33.4	8	12.4	3.7	1.7	25.7	2.5	16.5	2.5	0.1	21.6	4.8	10.9	2.8	0.8	19.3	

	Carnelian Street Southbound					Baseline Road Westbound					Carnelian Street Northbound					Baseline Road Eastbound					
Start Time	Left	Thru	Right	RoR	App. Total		Thru	Right	RoR	App. Total		Thru	Right	RoR	App. Total		Thru	Right	RoR	App. Total	Int. Total
Peak Hour Analysis From 07:15 AM to 08:00 AM - Peak 1 of 1																					
Peak Hour for Entire Intersection Begins at 07:15 AM																					
07:15 AM	57	164	24	3	248	76	103	42	19	240	19	129	31	0	179	36	78	26	3	143	810
07:30 AM	100	152	27	0	279	125	114	59	30	328	23	136	32	2	193	46	124	20	5	195	995
07:45 AM	43	203	25	1	272	59	98	37	25	219	14	129	7	1	151	36	106	25	9	176	818
08:00 AM	29	188	23	0	240	36	69	11	5	121	22	83	5	0	110	32	70	14	5	121	592
Total Volume	229	707	99	4	1039	296	384	149	79	908	78	477	75	3	633	150	378	85	22	635	3215
% App. Total	22	68	9.5	0.4		32.6	42.3	16.4	8.7		12.3	75.4	11.8	0.5		23.6	59.5	13.4	3.5		
PHF	.573	.871	.917	.333	.931	.592	.842	.631	.658	.692	.848	.877	.586	.375	.820	.815	.762	.817	.611	.814	.808

Counts Unlimited Inc.
25286 Jaclyn Avenue
Moreno Valley, CA 92557
951-485-7934

City of Rancho Cucamonga
N/S: Carnelian Street
E/W: Baseline Road
Weather: Sunny

File Name : RNCCABAAM
Site Code : 9150024
Start Date : 6/2/2009
Page No : 2

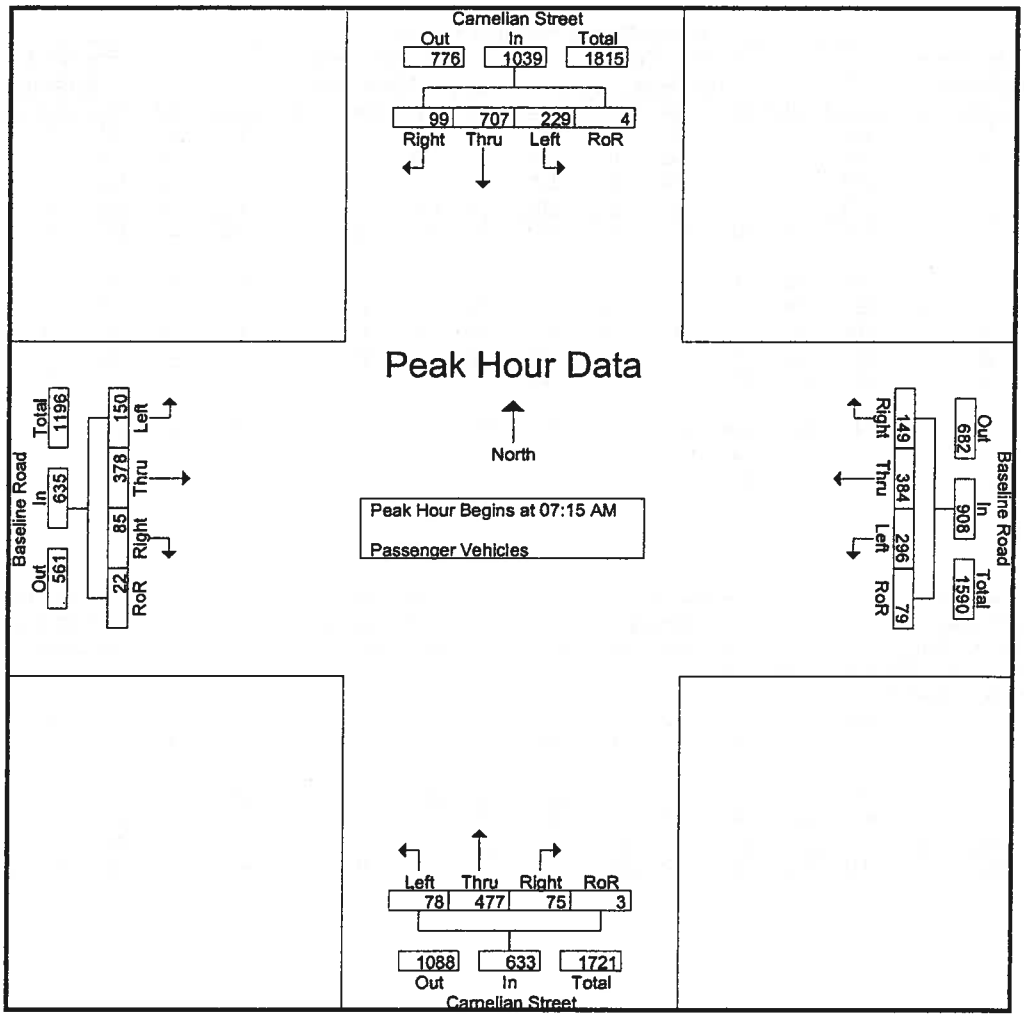

Peak Hour Analysis From 07:15 AM to 08:00 AM - Peak 1 of 1

Peak Hour for Each Approach Begins at:

	07:15 AM					07:15 AM					07:15 AM					07:15 AM				
+0 mins.	57	164	24	3	248	76	103	42	19	240	19	129	31	0	179	36	78	26	3	143
+15 mins.	100	152	27	0	279	125	114	59	30	328	23	136	32	2	193	46	124	20	5	195
+30 mins.	43	203	25	1	272	59	98	37	25	219	14	129	7	1	151	36	106	25	9	176
+45 mins.	29	188	23	0	240	36	69	11	5	121	22	83	5	0	110	32	70	14	5	121
Total Volume	229	707	99	4	1039	296	384	149	79	908	78	477	75	3	633	150	378	85	22	635
% App. Total	22	68	9.5	0.4		32.6	42.3	16.4	8.7		12.3	75.4	11.8	0.5		23.6	59.5	13.4	3.5	
PHF	.573	.871	.917	.333	.931	.592	.842	.631	.658	.692	.848	.877	.586	.375	.820	.815	.762	.817	.611	.814

Counts Unlimited Inc.
25286 Jaclyn Avenue
Moreno Valley, CA 92557
951-485-7934

City of Rancho Cucamonga
N/S: Carnelian Street
E/W: Baseline Road
Weather: Sunny

File Name : RNCCABAAM
Site Code : 9150024
Start Date : 6/2/2009
Page No : 1

Groups Printed- Large 2 Axle Vehicles

	Carnelian Street Southbound					Baseline Road Westbound					Carnelian Street Northbound					Baseline Road Eastbound					
Start Time	Left	Thru	Right	RoR	App. Total	Left	Thru	Right	RoR	App. Total	Left	Thru	Right	RoR	App. Total	Left	Thru	Right	RoR	App. Total	Int. Total
07:00 AM	2	0	0	0	2	2	1	0	0	3	0	1	0	0	1	0	0	1	0	1	7
07:15 AM	1	2	0	0	3	2	0	1	1	4	3	2	2	0	7	2	1	0	0	3	17
07:30 AM	0	0	0	0	0	0	0	1	1	2	1	2	1	0	4	0	1	1	0	2	8
07:45 AM	0	0	2	0	2	0	3	1	0	4	1	0	0	0	1	1	1	0	0	2	9
Total	3	2	2	0	7	4	4	3	2	13	5	5	3	0	13	3	3	2	0	8	41
08:00 AM	1	3	1	0	5	0	1	0	0	1	0	3	0	0	3	0	2	1	0	3	12
08:15 AM	0	2	0	0	2	0	2	0	0	2	1	1	0	0	2	0	3	0	0	3	9
08:30 AM	1	2	2	0	5	1	4	0	0	5	1	8	1	0	10	2	0	0	0	2	22
08:45 AM	0	2	0	0	2	0	4	0	1	5	0	1	0	0	1	2	2	0	0	4	12
Total	2	9	3	0	14	1	11	0	1	13	2	13	1	0	16	4	7	1	0	12	55
Grand Total	5	11	5	0	21	5	15	3	3	26	7	18	4	0	29	7	10	3	0	20	96
Apprch %	23.8	52.4	23.8	0		19.2	57.7	11.5	11.5		24.1	62.1	13.8	0		35	50	15	0		
Total %	5.2	11.5	5.2	0	21.9	5.2	15.6	3.1	3.1	27.1	7.3	18.8	4.2	0	30.2	7.3	10.4	3.1	0	20.8	

	Carnelian Street Southbound					Baseline Road Westbound					Carnelian Street Northbound					Baseline Road Eastbound					
Start Time	Left	Thru	Right	RoR	App. Total		Thru	Right	RoR	App. Total		Thru	Right	RoR	App. Total		Thru	Right	RoR	App. Total	Int. Total
Peak Hour Analysis From 07:15 AM to 08:00 AM - Peak 1 of 1																					
Peak Hour for Entire Intersection Begins at 07:15 AM																					
07:15 AM	1	2	0	0	3	2	0	1	1	4	3	2	2	0	7	2	1	0	0	3	17
07:30 AM	0	0	0	0	0	0	0	1	1	2	1	2	1	0	4	0	1	1	0	2	8
07:45 AM	0	0	2	0	2	0	3	1	0	4	1	0	0	0	1	1	1	0	0	2	9
08:00 AM	1	3	1	0	5	0	1	0	0	1	0	3	0	0	3	0	2	1	0	3	12
Total Volume	2	5	3	0	10	2	4	3	2	11	5	7	3	0	15	3	5	2	0	10	46
% App. Total	20	50	30	0		18.2	36.4	27.3	18.2		33.3	46.7	20	0		30	50	20	0		
PHF	.500	.417	.375	.000	.500	.250	.333	.750	.500	.688	.417	.583	.375	.000	.536	.375	.625	.500	.000	.833	.676

Counts Unlimited Inc.
25286 Jaclyn Avenue
Moreno Valley, CA 92557
951-485-7934

City of Rancho Cucamonga
N/S: Carnelian Street
E/W: Baseline Road
Weather: Sunny

File Name : RNCCABAAM
Site Code : 9150024
Start Date : 6/2/2009
Page No : 2

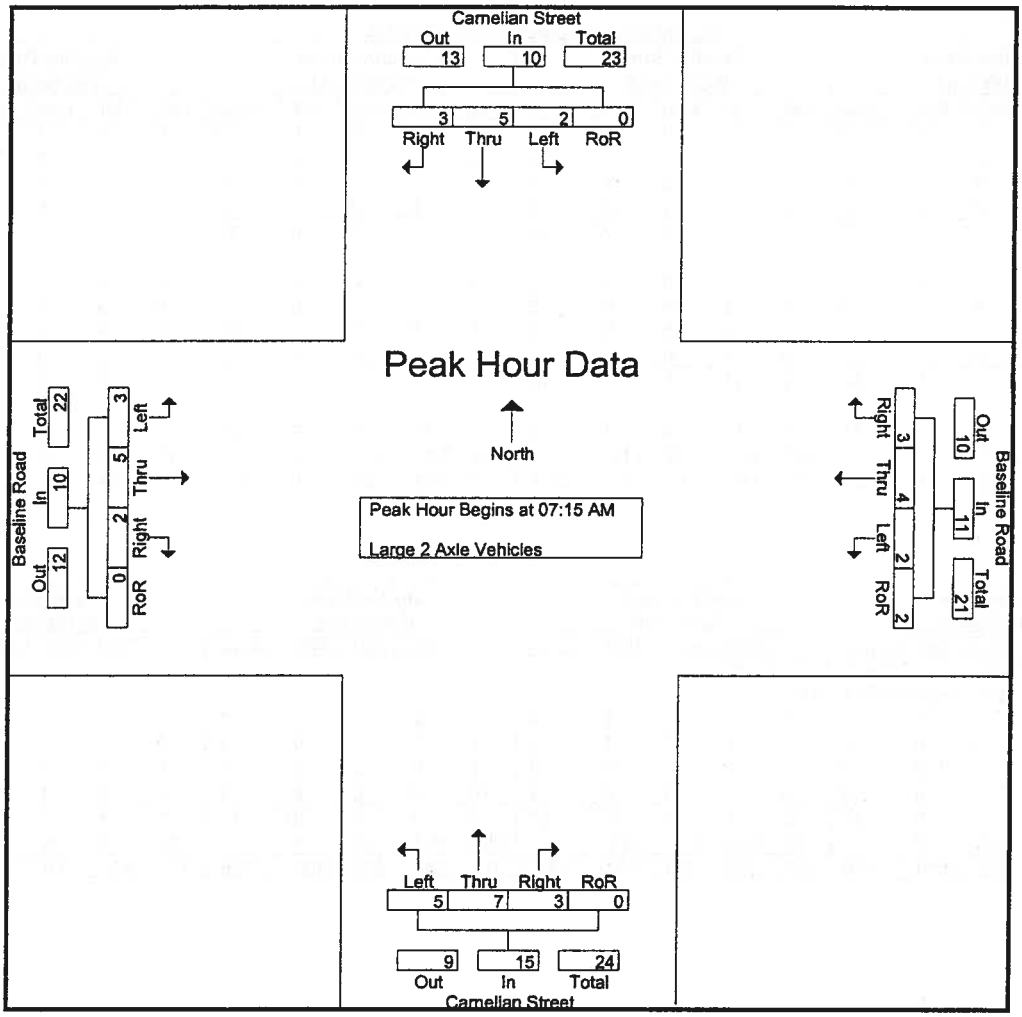

Peak Hour Analysis From 07:15 AM to 08:00 AM - Peak 1 of 1

Peak Hour for Each Approach Begins at:

	07:15 AM					07:15 AM					07:15 AM					07:15 AM				
+0 mins.	1	2	0	0	3	2	0	1	1	4	3	2	2	0	7	2	1	0	0	3
+15 mins.	0	0	0	0	0	0	0	1	1	2	1	2	1	0	4	0	1	1	0	2
+30 mins.	0	0	2	0	2	0	3	1	0	4	1	0	0	0	1	1	1	0	0	2
+45 mins.	1	3	1	0	5	0	1	0	0	1	0	3	0	0	3	0	2	1	0	3
Total Volume	2	5	3	0	10	2	4	3	2	11	5	7	3	0	15	3	5	2	0	10
% App. Total	20	50	30	0		18.2	36.4	27.3	18.2		33.3	46.7	20	0		30	50	20	0	
PHF	.500	.417	.375	.000	.500	.250	.333	.750	.500	.688	.417	.583	.375	.000	.536	.375	.625	.500	.000	.833

Counts Unlimited Inc.
25286 Jaclyn Avenue
Moreno Valley, CA 92557
951-485-7934

City of Rancho Cucamonga
N/S: Carnelian Street
E/W: Baseline Road
Weather: Sunny

File Name : RNCCABAAM
Site Code : 9150024
Start Date : 6/2/2009
Page No : 1

Groups Printed- 3 Axle Vehicles

	Carnelian Street Southbound					Baseline Road Westbound					Carnelian Street Northbound					Baseline Road Eastbound					
Start Time	Left	Thru	Right	RoR	App. Total	Left	Thru	Right	RoR	App. Total	Left	Thru	Right	RoR	App. Total	Left	Thru	Right	RoR	App. Total	Int. Total
07:00 AM	0	0	0	0	0	3	1	0	0	4	0	0	0	0	0	0	2	2	1	5	9
07:15 AM	1	1	0	0	2	2	0	0	0	2	0	0	0	0	0	0	3	0	0	3	7
07:30 AM	0	1	0	0	1	0	0	0	0	0	0	1	0	0	1	0	2	0	0	2	4
07:45 AM	0	0	0	0	0	1	1	0	0	2	0	0	0	0	0	0	0	0	0	0	2
Total	1	2	0	0	3	6	2	0	0	8	0	1	0	0	1	0	7	2	1	10	22
08:00 AM	0	0	0	0	0	0	0	0	0	0	0	2	0	0	2	0	1	0	0	1	3
08:15 AM	0	1	1	0	2	0	0	0	0	0	0	0	0	0	0	1	0	0	0	1	3
08:30 AM	0	0	0	0	0	0	0	1	0	1	0	0	0	0	0	0	0	0	0	0	1
08:45 AM	0	2	0	0	2	0	0	0	0	0	0	0	0	0	0	0	0	0	0	0	2
Total	0	3	1	0	4	0	0	1	0	1	0	2	0	0	2	1	1	0	0	2	9
Grand Total	1	5	1	0	7	6	2	1	0	9	0	3	0	0	3	1	8	2	1	12	31
Apprch %	14.3	71.4	14.3	0		66.7	22.2	11.1	0		0	100	0	0		8.3	66.7	16.7	8.3		
Total %	3.2	16.1	3.2	0	22.6	19.4	6.5	3.2	0	29	0	9.7	0	0	9.7	3.2	25.8	6.5	3.2	38.7	

	Carnelian Street Southbound					Baseline Road Westbound					Carnelian Street Northbound					Baseline Road Eastbound					
Start Time	Left	Thru	Right	RoR	App. Total		Thru	Right	RoR	App. Total		Thru	Right	RoR	App. Total		Thru	Right	RoR	App. Total	Int. Total
Peak Hour Analysis From 07:15 AM to 08:00 AM - Peak 1 of 1																					
Peak Hour for Entire Intersection Begins at 07:15 AM																					
07:15 AM	1	1	0	0	2	2	0	0	0	2	0	0	0	0	0	0	3	0	0	3	7
07:30 AM	0	1	0	0	1	0	0	0	0	0	0	1	0	0	1	0	2	0	0	2	4
07:45 AM	0	0	0	0	0	1	1	0	0	2	0	0	0	0	0	0	0	0	0	0	2
08:00 AM	0	0	0	0	0	0	0	0	0	0	0	2	0	0	2	0	1	0	0	1	3
Total Volume	1	2	0	0	3	3	1	0	0	4	0	3	0	0	3	0	6	0	0	6	16
% App. Total	33.3	66.7	0	0		75	25	0	0		0	100	0	0		0	100	0	0		
PHF	.250	.500	.000	.000	.375	.375	.250	.000	.000	.500	.000	.375	.000	.000	.375	.000	.500	.000	.000	.500	.571

Counts Unlimited Inc.
25286 Jaclyn Avenue
Moreno Valley, CA 92557
951-485-7934

City of Rancho Cucamonga
N/S: Carnelian Street
E/W: Baseline Road
Weather: Sunny

File Name : RNCCABAAM
Site Code : 9150024
Start Date : 6/2/2009
Page No : 2

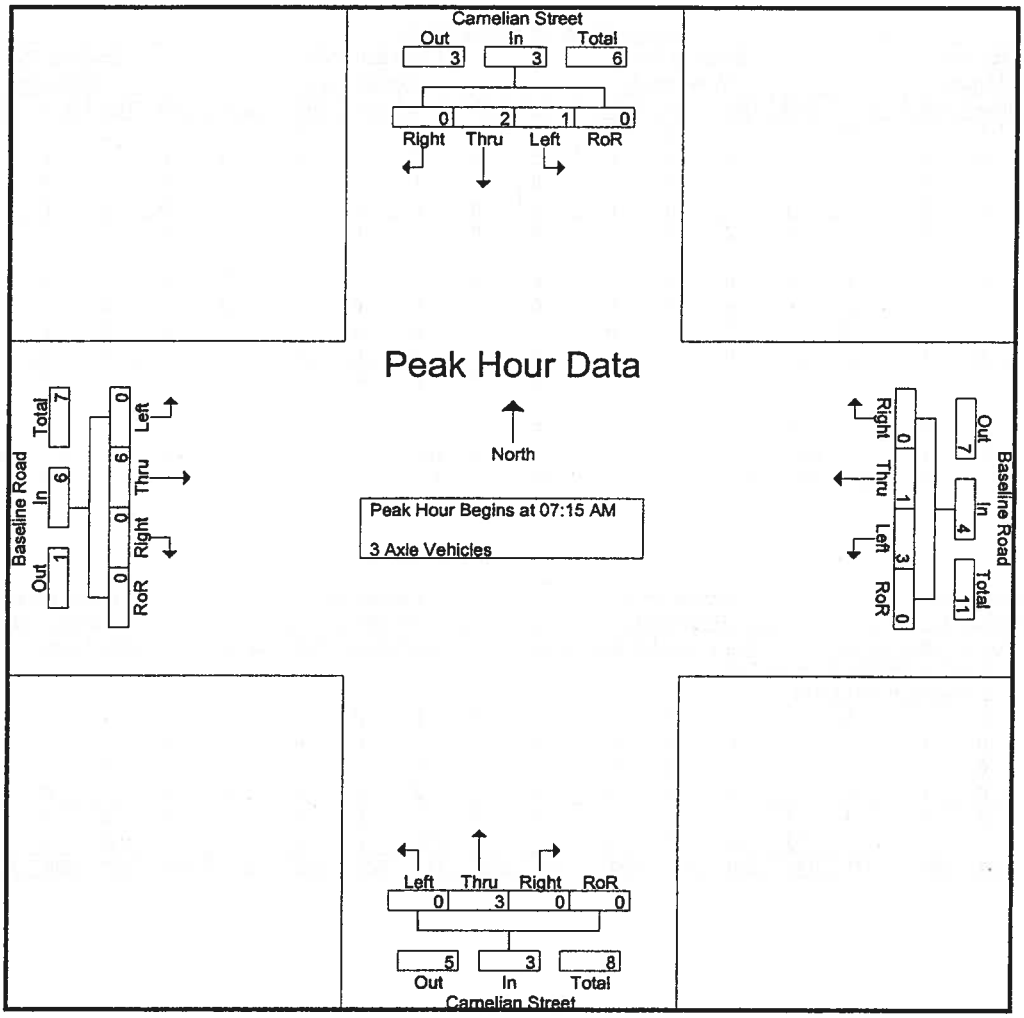

Peak Hour Analysis From 07:15 AM to 08:00 AM - Peak 1 of 1

Peak Hour for Each Approach Begins at:

	07:15 AM					07:15 AM					07:15 AM					07:15 AM				
+0 mins.	1	1	0	0	2	2	0	0	0	2	0	0	0	0	0	0	3	0	0	3
+15 mins.	0	1	0	0	1	0	0	0	0	0	0	1	0	0	1	0	2	0	0	2
+30 mins.	0	0	0	0	0	1	1	0	0	2	0	0	0	0	0	0	0	0	0	0
+45 mins.	0	0	0	0	0	0	0	0	0	0	0	2	0	0	2	0	1	0	0	1
Total Volume	1	2	0	0	3	3	1	0	0	4	0	3	0	0	3	0	6	0	0	6
% App. Total	33.3	66.7	0	0		75	25	0	0		0	100	0	0		0	100	0	0	
PHF	.250	.500	.000	.000	.375	.375	.250	.000	.000	.500	.000	.375	.000	.000	.375	.000	.500	.000	.000	.500

Counts Unlimited Inc.
25286 Jaclyn Avenue
Moreno Valley, CA 92557
951-485-7934

City of Rancho Cucamonga
N/S: Carnelian Street
E/W: Baseline Road
Weather: Sunny

File Name : RNCCABAAM
Site Code : 9150024
Start Date : 6/2/2009
Page No : 1

Groups Printed- 4+ Axle Trucks

	Carnelian Street Southbound					Baseline Road Westbound					Carnelian Street Northbound					Baseline Road Eastbound					
Start Time	Left	Thru	Right	RoR	App. Total	Left	Thru	Right	RoR	App. Total	Left	Thru	Right	RoR	App. Total	Left	Thru	Right	RoR	App. Total	Int. Total
07:00 AM	0	0	0	0	0	2	1	1	0	4	0	1	0	0	1	0	0	1	0	1	6
07:15 AM	0	0	0	0	0	0	0	0	0	0	0	0	0	0	0	0	0	0	0	0	0
07:30 AM	0	0	0	0	0	0	0	0	0	0	0	1	0	0	1	0	0	0	0	0	1
07:45 AM	1	0	0	0	1	0	0	0	0	0	0	1	0	0	1	0	0	1	0	1	3
Total	1	0	0	0	1	2	1	1	0	4	0	3	0	0	3	0	0	2	0	2	10
08:00 AM	0	0	0	0	0	0	0	0	0	0	0	0	0	0	0	0	0	0	0	0	0
08:15 AM	0	0	0	0	0	0	0	0	0	0	1	1	0	0	2	0	0	0	0	0	2
08:30 AM	0	0	0	0	0	0	0	0	0	0	0	0	0	0	0	0	0	0	0	0	0
08:45 AM	0	0	0	0	0	0	0	0	0	0	0	0	0	0	0	1	0	0	0	1	1
Total	0	0	0	0	0	0	0	0	0	0	1	1	0	0	2	1	0	0	0	1	3
Grand Total	1	0	0	0	1	2	1	1	0	4	1	4	0	0	5	1	0	2	0	3	13
Apprch %	100	0	0	0		50	25	25	0		20	80	0	0		33.3	0	66.7	0		
Total %	7.7	0	0	0	7.7	15.4	7.7	7.7	0	30.8	7.7	30.8	0	0	38.5	7.7	0	15.4	0	23.1	

	Carnelian Street Southbound					Baseline Road Westbound					Carnelian Street Northbound					Baseline Road Eastbound					
Start Time	Left	Thru	Right	RoR	App. Total		Thru	Right	RoR	App. Total		Thru	Right	RoR	App. Total		Thru	Right	RoR	App. Total	Int. Total
Peak Hour Analysis From 07:15 AM to 08:00 AM - Peak 1 of 1																					
Peak Hour for Entire Intersection Begins at 07:15 AM																					
07:15 AM	0	0	0	0	0	0	0	0	0	0	0	0	0	0	0	0	0	0	0	0	0
07:30 AM	0	0	0	0	0	0	0	0	0	0	0	1	0	0	1	0	0	0	0	0	1
07:45 AM	1	0	0	0	1	0	0	0	0	0	0	1	0	0	1	0	0	1	0	1	3
08:00 AM	0	0	0	0	0	0	0	0	0	0	0	0	0	0	0	0	0	0	0	0	0
Total Volume	1	0	0	0	1	0	0	0	0	0	0	2	0	0	2	0	0	1	0	1	4
% App. Total	100	0	0	0		0	0	0	0		0	100	0	0		0	0	100	0		
PHF	.250	.000	.000	.000	.250	.000	.000	.000	.000	.000	.000	.500	.000	.000	.500	.000	.000	.250	.000	.250	.333

Counts Unlimited Inc.
25286 Jaclyn Avenue
Moreno Valley, CA 92557
951-485-7934

City of Rancho Cucamonga
N/S: Carnelian Street
E/W: Baseline Road
Weather: Sunny

File Name : RNCCABAAM
Site Code : 9150024
Start Date : 6/2/2009
Page No : 2

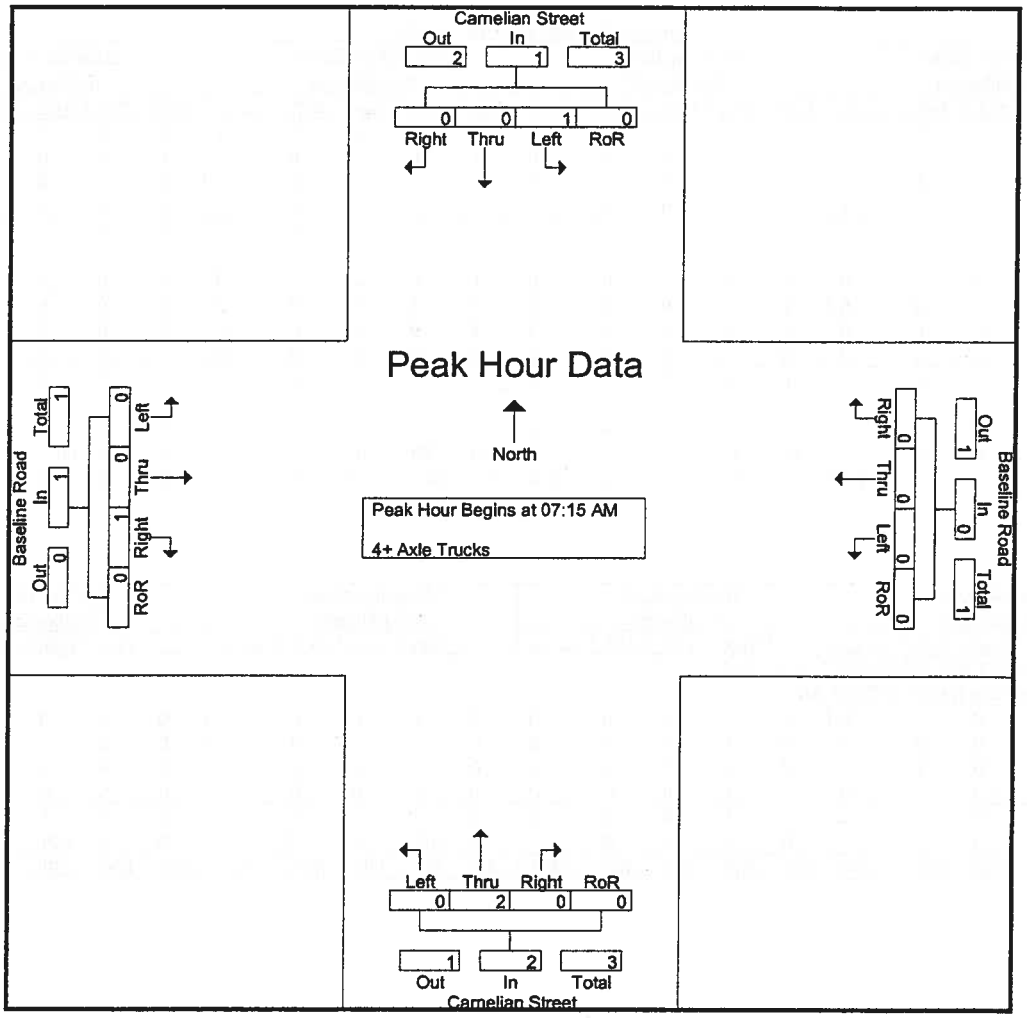

Peak Hour Analysis From 07:15 AM to 08:00 AM - Peak 1 of 1

Peak Hour for Each Approach Begins at:

	07:15 AM					07:15 AM					07:15 AM					07:15 AM				
+0 mins.	0	0	0	0	0	0	0	0	0	0	0	0	0	0	0	0	0	0	0	0
+15 mins.	0	0	0	0	0	0	0	0	0	0	0	1	0	0	1	0	0	0	0	0
+30 mins.	1	0	0	0	1	0	0	0	0	0	0	1	0	0	1	0	0	1	0	1
+45 mins.	0	0	0	0	0	0	0	0	0	0	0	0	0	0	0	0	0	0	0	0
Total Volume	1	0	0	0	1	0	0	0	0	0	0	2	0	0	2	0	0	1	0	1
% App. Total	100	0	0	0		0	0	0	0		0	100	0	0		0	0	100	0	
PHF	.250	.000	.000	.000	.250	.000	.000	.000	.000	.000	.000	.500	.000	.000	.500	.000	.000	.250	.000	.250

Counts Unlimited Inc.
25286 Jaclyn Avenue
Moreno Valley, CA 92557
951-485-7934

City of Rancho Cucamonga
N/S: Carnelian Street
E/W: Baseline Road
Weather: Sunny

File Name : RNCCABAPM
Site Code : 9150024
Start Date : 6/2/2009
Page No : 1

Groups Printed- Passenger Vehicles - Large 2 Axle Vehicles - 3 Axle Vehicles - 4+ Axle Trucks

	Carnelian Street Southbound					Baseline Road Westbound					Carnelian Street Northbound					Baseline Road Eastbound					
Start Time	Left	Thru	Right	RoR	App. Total	Left	Thru	Right	RoR	App. Total	Left	Thru	Right	RoR	App. Total	Left	Thru	Right	RoR	App. Total	Int. Total
04:00 PM	35	179	19	0	233	55	92	26	8	181	40	198	14	4	256	81	172	12	3	268	938
04:15 PM	91	188	30	8	317	64	132	24	12	232	48	164	35	2	249	63	134	24	7	228	1026
04:30 PM	54	205	22	1	282	43	105	28	9	185	32	231	10	3	276	51	132	13	3	199	942
04:45 PM	38	174	14	2	228	63	75	45	14	197	39	182	15	2	238	77	142	11	3	233	896
Total	218	746	85	11	1060	225	404	123	43	795	159	775	74	11	1019	272	580	60	16	928	3802
05:00 PM	49	224	19	0	292	42	99	19	8	168	35	224	23	3	285	62	165	14	2	243	988
05:15 PM	45	194	15	3	257	54	79	18	7	158	34	179	23	3	239	73	139	14	7	233	887
05:30 PM	50	170	16	2	238	53	114	36	4	207	46	190	26	3	265	97	217	18	1	333	1043
05:45 PM	47	200	8	3	258	56	126	27	7	216	35	217	10	6	268	90	186	8	5	289	1031
Total	191	788	58	8	1045	205	418	100	26	749	150	810	82	15	1057	322	707	54	15	1098	3949
Grand Total	409	1534	143	19	2105	430	822	223	69	1544	309	1585	156	26	2076	594	1287	114	31	2026	7751
Apprch %	19.4	72.9	6.8	0.9		27.8	53.2	14.4	4.5		14.9	76.3	7.5	1.3		29.3	63.5	5.6	1.5		
Total %	5.3	19.8	1.8	0.2	27.2	5.5	10.6	2.9	0.9	19.9	4	20.4	2	0.3	26.8	7.7	16.6	1.5	0.4	26.1	
Passenger Vehicles		1508										1566					1272				
% Passenger Vehicles	99.5	98.3	100	100	98.7	98.8	99.5	99.6	100	99.4	99.4	98.8	96.8	92.3	98.7	99.2	98.8	97.4	96.8	98.8	98.8
Large 2 Axle Vehicles																					
% Large 2 Axle Vehicles	0	1.1	0	0	0.8	0.5	0.4	0.4	0	0.4	0.3	0.6	0.6	0	0.5	0.7	0.5	0.9	0	0.6	0.6
3 Axle Vehicles	2	7	0	0	9	3	1	0	0	4	1	8	4	2	15	1	8	2	1	12	40
% 3 Axle Vehicles	0.5	0.5	0	0	0.4	0.7	0.1	0	0	0.3	0.3	0.5	2.6	7.7	0.7	0.2	0.6	1.8	3.2	0.6	0.5
4+ Axle Trucks	0	2	0	0	2	0	0	0	0	0	0	2	0	0	2	0	0	0	0	0	4
% 4+ Axle Trucks																					

	Carnelian Street Southbound					Baseline Road Westbound					Carnelian Street Northbound					Baseline Road Eastbound					
Start Time	Left	Thru	Right	RoR	App. Total	Left	Thru	Right	RoR	App. Total	Left	Thru	Right	RoR	App. Total	Left	Thru	Right	RoR	App. Total	Int. Total
Peak Hour Analysis From 04:00 PM to 05:45 PM - Peak 1 of 1																					
Peak Hour for Entire Intersection Begins at 05:00 PM																					
05:00 PM	49	**224**	**19**	0	**292**	42	99	19	**8**	168	35	**224**	23	3	**285**	62	165	14	2	243	988
05:15 PM	45	194	15	**3**	257	54	79	18	7	158	34	179	23	3	239	73	139	14	7	233	887
05:30 PM	**50**	170	16	2	238	53	114	**36**	4	207	**46**	190	**26**	3	265	97	**217**	**18**	1	**333**	**1043**
05:45 PM	47	200	8	3	258	**56**	**126**	27	7	**216**	35	217	10	**6**	268	90	186	8	5	289	1031
Total Volume	191	788	58	8	1045	205	418	100	26	749	150	810	82	15	1057	322	707	54	15	1098	3949
% App. Total	18.3	75.4	5.6	0.8		27.4	55.8	13.4	3.5		14.2	76.6	7.8	1.4		29.3	64.4	4.9	1.4		
PHF	.955	.879	.763	.667	.895	.915	.829	.694	.813	.867	.815	.904	.788	.625	.927	.830	.815	.750	.536	.824	.947

Counts Unlimited Inc.
25286 Jaclyn Avenue
Moreno Valley, CA 92557
951-485-7934

City of Rancho Cucamonga
N/S: Carnelian Street
E/W: Baseline Road
Weather: Sunny

File Name : RNCCABAPM
Site Code : 9150024
Start Date : 6/2/2009
Page No : 2

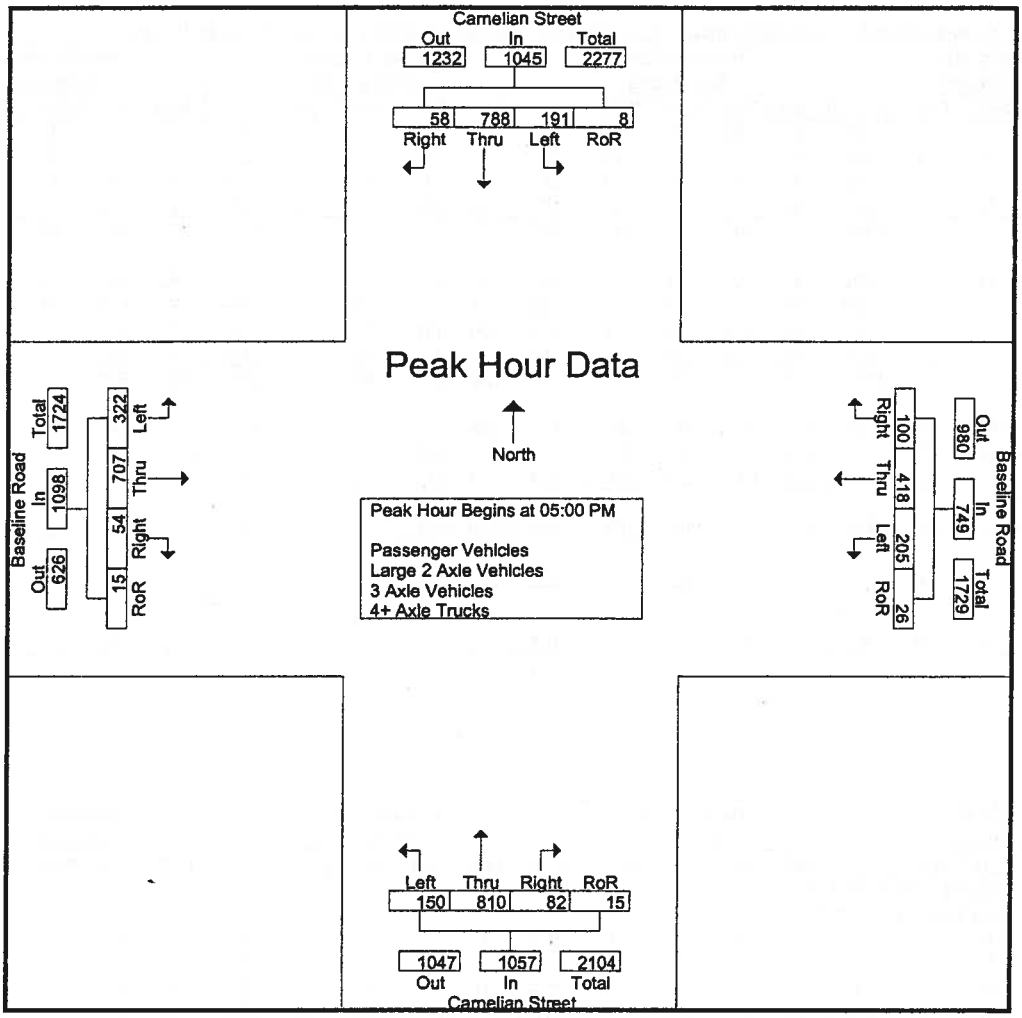

Peak Hour Analysis From 04:00 PM to 05:45 PM - Peak 1 of 1

Peak Hour for Each Approach Begins at:

	04:15 PM					04:00 PM					05:00 PM					05:00 PM				
+0 mins.	**91**	188	**30**	**8**	**317**	55	92	26	8	181	35	**224**	23	3	**285**	62	165	14	**2**	243
+15 mins.	54	205	22	1	282	**64**	**132**	24	12	**232**	34	179	23	3	239	73	139	14	**7**	233
+30 mins.	38	174	14	2	228	43	105	28	9	185	**46**	190	**26**	3	265	**97**	**217**	**18**	1	**333**
+45 mins.	49	**224**	19	0	292	63	75	**45**	**14**	197	35	217	10	**6**	268	90	186	8	5	289
Total Volume	232	791	85	11	1119	225	404	123	43	795	150	810	82	15	1057	322	707	54	15	1098
% App. Total	20.7	70.7	7.6	1		28.3	50.8	15.5	5.4		14.2	76.6	7.8	1.4		29.3	64.4	4.9	1.4	
PHF	.637	.883	.708	.344	.882	.879	.765	.683	.768	.857	.815	.904	.788	.625	.927	.830	.815	.750	.536	.824

Counts Unlimited Inc.
25286 Jaclyn Avenue
Moreno Valley, CA 92557
951-485-7934

City of Rancho Cucamonga
N/S: Carnelian Street
E/W: Baseline Road
Weather: Sunny

File Name : RNCCABAPM
Site Code : 9150024
Start Date : 6/2/2009
Page No : 1

Groups Printed- Passenger Vehicles

	Carnelian Street Southbound					Baseline Road Westbound					Carnelian Street Northbound					Baseline Road Eastbound					
Start Time	Left	Thru	Right	RoR	App. Total	Left	Thru	Right	RoR	App. Total	Left	Thru	Right	RoR	App. Total	Left	Thru	Right	RoR	App. Total	Int. Total
04:00 PM	35	177	19	0	231	54	92	26	8	180	40	195	14	2	251	80	169	10	2	261	923
04:15 PM	90	185	30	8	313	62	132	24	12	230	47	162	32	2	243	62	130	24	7	223	1009
04:30 PM	53	200	22	1	276	43	105	28	9	185	31	228	10	3	272	51	129	13	3	196	929
04:45 PM	38	169	14	2	223	62	74	44	14	194	39	177	14	2	232	77	140	11	3	231	880
Total	216	731	85	11	1043	221	403	122	43	789	157	762	70	9	998	270	568	58	15	911	3741
05:00 PM	49	221	19	0	289	42	98	19	8	167	35	222	23	3	283	62	164	14	2	242	981
05:15 PM	45	191	15	3	254	54	78	18	7	157	34	178	23	3	238	72	138	13	7	230	879
05:30 PM	50	167	16	2	235	53	114	36	4	207	46	189	25	3	263	95	216	18	1	330	1035
05:45 PM	47	198	8	3	256	55	125	27	7	214	35	215	10	6	266	90	186	8	5	289	1025
Total	191	777	58	8	1034	204	415	100	26	745	150	804	81	15	1050	319	704	53	15	1091	3920
Grand Total	407	1508	143	19	2077	425	818	222	69	1534	307	1566	151	24	2048	589	1272	111	30	2002	7661
Apprch %	19.6	72.6	6.9	0.9		27.7	53.3	14.5	4.5		15	76.5	7.4	1.2		29.4	63.5	5.5	1.5		
Total %	5.3	19.7	1.9	0.2	27.1	5.5	10.7	2.9	0.9	20	4	20.4	2	0.3	26.7	7.7	16.6	1.4	0.4	26.1	

	Carnelian Street Southbound					Baseline Road Westbound					Carnelian Street Northbound					Baseline Road Eastbound					
Start Time	Left	Thru	Right	RoR	App. Total		Thru	Right	RoR	App. Total		Thru	Right	RoR	App. Total		Thru	Right	RoR	App. Total	Int. Total
Peak Hour Analysis From 05:00 PM to 05:45 PM - Peak 1 of 1																					
Peak Hour for Entire Intersection Begins at 05:00 PM																					
05:00 PM	49	**221**	**19**	0	**289**	42	98	19	**8**	167	35	**222**	23	3	**283**	62	164	14	2	242	981
05:15 PM	45	191	15	3	254	54	78	18	7	157	34	178	23	3	238	72	138	13	**7**	230	879
05:30 PM	**50**	167	16	2	235	53	114	**36**	4	207	**46**	189	**25**	3	263	**95**	**216**	**18**	1	**330**	**1035**
05:45 PM	47	198	8	3	256	**55**	**125**	27	7	**214**	35	215	10	**6**	266	90	186	8	5	289	1025
Total Volume	191	777	58	8	1034	204	415	100	26	745	150	804	81	15	1050	319	704	53	15	1091	3920
% App. Total	18.5	75.1	5.6	0.8		27.4	55.7	13.4	3.5		14.3	76.6	7.7	1.4		29.2	64.5	4.9	1.4		
PHF	.955	.879	.763	.667	.894	.927	.830	.694	.813	.870	.815	.905	.810	.625	.928	.839	.815	.736	.536	.827	.947

Counts Unlimited Inc.
25286 Jaclyn Avenue
Moreno Valley, CA 92557
951-485-7934

City of Rancho Cucamonga
N/S: Carnelian Street
E/W: Baseline Road
Weather: Sunny

File Name : RNCCABAPM
Site Code : 9150024
Start Date : 6/2/2009
Page No : 2

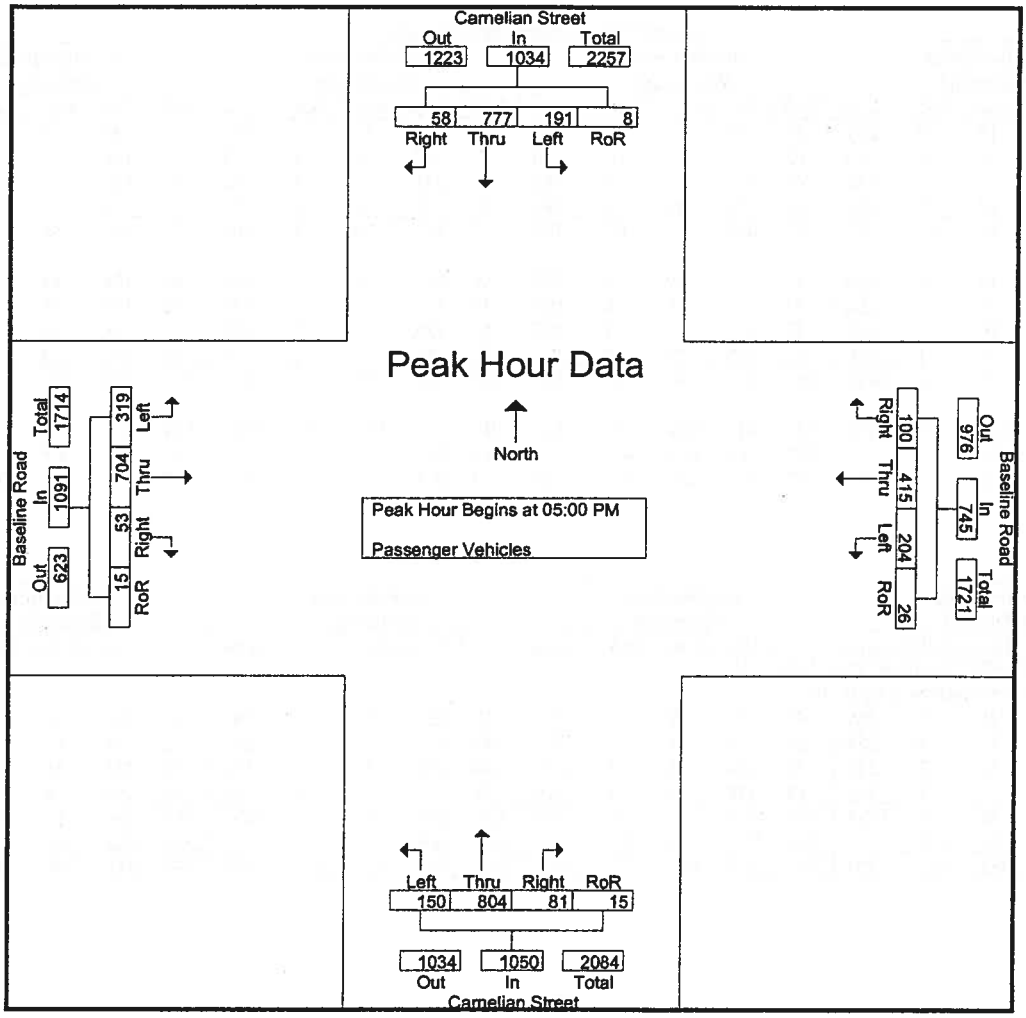

Peak Hour Analysis From 05:00 PM to 05:45 PM - Peak 1 of 1

Peak Hour for Each Approach Begins at:

	05:00 PM					05:00 PM					05:00 PM					05:00 PM				
+0 mins.	49	221	19	0	289	42	98	19	8	167	35	222	23	3	283	62	164	14	2	242
+15 mins.	45	191	15	3	254	54	78	18	7	157	34	178	23	3	238	72	138	13	7	230
+30 mins.	50	167	16	2	235	53	114	36	4	207	46	189	25	3	263	95	216	18	1	330
+45 mins.	47	198	8	3	256	55	125	27	7	214	35	215	10	6	266	90	186	8	5	289
Total Volume	191	777	58	8	1034	204	415	100	26	745	150	804	81	15	1050	319	704	53	15	1091
% App. Total	18.5	75.1	5.6	0.8		27.4	55.7	13.4	3.5		14.3	76.6	7.7	1.4		29.2	64.5	4.9	1.4	
PHF	.955	.879	.763	.667	.894	.927	.830	.694	.813	.870	.815	.905	.810	.625	.928	.839	.815	.736	.536	.827

Counts Unlimited Inc.
25286 Jaclyn Avenue
Moreno Valley, CA 92557
951-485-7934

City of Rancho Cucamonga
N/S: Carnelian Street
E/W: Baseline Road
Weather: Sunny

File Name : RNCCABAPM
Site Code : 9150024
Start Date : 6/2/2009
Page No : 1

Groups Printed- Large 2 Axle Vehicles

	Carnelian Street Southbound					Baseline Road Westbound					Carnelian Street Northbound					Baseline Road Eastbound					
Start Time	Left	Thru	Right	RoR	App. Total	Left	Thru	Right	RoR	App. Total	Left	Thru	Right	RoR	App. Total	Left	Thru	Right	RoR	App. Total	Int. Total
04:00 PM	0	2	0	0	2	0	0	0	0	0	0	0	0	0	0	1	1	0	0	2	4
04:15 PM	0	2	0	0	2	0	0	0	0	0	0	0	0	0	0	1	1	0	0	2	4
04:30 PM	0	2	0	0	2	0	0	0	0	0	1	2	0	0	3	0	1	0	0	1	6
04:45 PM	0	2	0	0	2	1	1	1	0	3	0	3	1	0	4	0	2	0	0	2	11
Total	0	8	0	0	8	1	1	1	0	3	1	5	1	0	7	2	5	0	0	7	25
05:00 PM	0	2	0	0	2	0	1	0	0	1	0	2	0	0	2	0	0	0	0	0	5
05:15 PM	0	3	0	0	3	0	1	0	0	1	0	1	0	0	1	0	1	1	0	2	7
05:30 PM	0	2	0	0	2	0	0	0	0	0	0	0	0	0	0	2	1	0	0	3	5
05:45 PM	0	2	0	0	2	1	0	0	0	1	0	1	0	0	1	0	0	0	0	0	4
Total	0	9	0	0	9	1	2	0	0	3	0	4	0	0	4	2	2	1	0	5	21
Grand Total	0	17	0	0	17	2	3	1	0	6	1	9	1	0	11	4	7	1	0	12	46
Apprch %	0	100	0	0		33.3	50	16.7	0		9.1	81.8	9.1	0		33.3	58.3	8.3	0		
Total %	0	37	0	0	37	4.3	6.5	2.2	0	13	2.2	19.6	2.2	0	23.9	8.7	15.2	2.2	0	26.1	

	Carnelian Street Southbound					Baseline Road Westbound					Carnelian Street Northbound					Baseline Road Eastbound					
Start Time	Left	Thru	Right	RoR	App. Total		Thru	Right	RoR	App. Total		Thru	Right	RoR	App. Total		Thru	Right	RoR	App. Total	Int. Total
Peak Hour Analysis From 05:00 PM to 05:45 PM - Peak 1 of 1																					
Peak Hour for Entire Intersection Begins at 05:00 PM																					
05:00 PM	0	2	0	0	2	0	1	0	0	1	0	2	0	0	2	0	0	0	0	0	5
05:15 PM	0	3	0	0	3	0	1	0	0	1	0	1	0	0	1	0	1	1	0	2	7
05:30 PM	0	2	0	0	2	0	0	0	0	0	0	0	0	0	0	2	1	0	0	3	5
05:45 PM	0	2	0	0	2	1	0	0	0	1	0	1	0	0	1	0	0	0	0	0	4
Total Volume	0	9	0	0	9	1	2	0	0	3	0	4	0	0	4	2	2	1	0	5	21
% App. Total	0	100	0	0		33.3	66.7	0	0		0	100	0	0		40	40	20	0		
PHF	.000	.750	.000	.000	.750	.250	.500	.000	.000	.750	.000	.500	.000	.000	.500	.250	.500	.250	.000	.417	.750

Counts Unlimited Inc.
25286 Jaclyn Avenue
Moreno Valley, CA 92557
951-485-7934

City of Rancho Cucamonga
N/S: Carnelian Street
E/W: Baseline Road
Weather: Sunny

File Name : RNCCABAPM
Site Code : 9150024
Start Date : 6/2/2009
Page No : 2

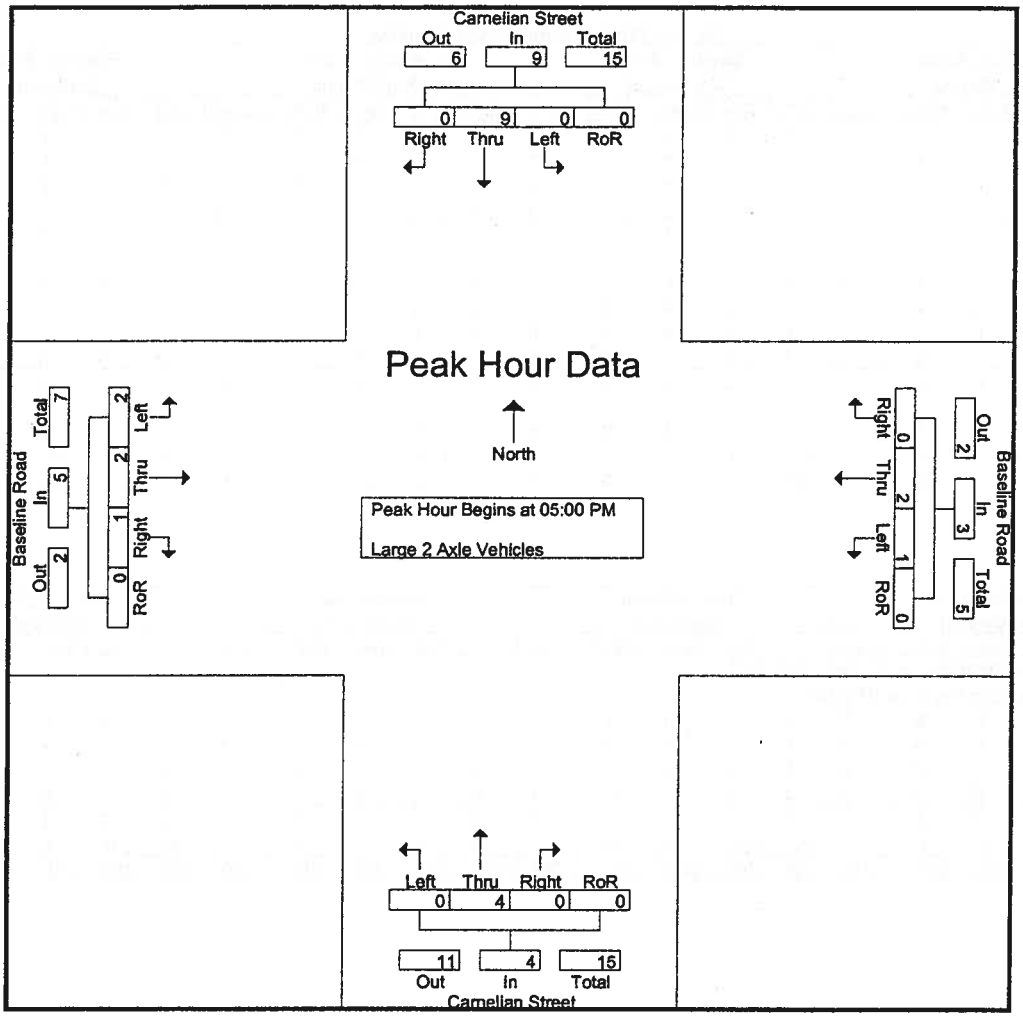

Peak Hour Analysis From 05:00 PM to 05:45 PM - Peak 1 of 1

Peak Hour for Each Approach Begins at:

	05:00 PM					05:00 PM					05:00 PM					05:00 PM				
+0 mins.	0	2	0	0	2	0	1	0	0	1	0	2	0	0	2	0	0	0	0	0
+15 mins.	0	3	0	0	3	0	1	0	0	1	0	1	0	0	1	0	1	1	0	2
+30 mins.	0	2	0	0	2	0	0	0	0	0	0	0	0	0	0	2	1	0	0	3
+45 mins.	0	2	0	0	2	1	0	0	0	1	0	1	0	0	1	0	0	0	0	0
Total Volume	0	9	0	0	9	1	2	0	0	3	0	4	0	0	4	2	2	1	0	5
% App. Total	0	100	0	0		33.3	66.7	0	0		0	100	0	0		40	40	20	0	
PHF	.000	.750	.000	.000	.750	.250	.500	.000	.000	.750	.000	.500	.000	.000	.500	.250	.500	.250	.000	.417

Counts Unlimited Inc.
25286 Jaclyn Avenue
Moreno Valley, CA 92557
951-485-7934

City of Rancho Cucamonga
N/S: Carnelian Street
E/W: Baseline Road
Weather: Sunny

File Name : RNCCABAPM
Site Code : 9150024
Start Date : 6/2/2009
Page No : 1

Groups Printed- 3 Axle Vehicles

	Carnelian Street Southbound					Baseline Road Westbound					Carnelian Street Northbound					Baseline Road Eastbound					
Start Time	Left	Thru	Right	RoR	App. Total	Left	Thru	Right	RoR	App. Total	Left	Thru	Right	RoR	App. Total	Left	Thru	Right	RoR	App. Total	Int. Total
04:00 PM	0	0	0	0	0	1	0	0	0	1	0	2	0	2	4	0	2	2	1	5	10
04:15 PM	1	1	0	0	2	2	0	0	0	2	1	1	3	0	5	0	3	0	0	3	12
04:30 PM	1	2	0	0	3	0	0	0	0	0	0	1	0	0	1	0	2	0	0	2	6
04:45 PM	0	2	0	0	2	0	0	0	0	0	0	2	0	0	2	0	0	0	0	0	4
Total	2	5	0	0	7	3	0	0	0	3	1	6	3	2	12	0	7	2	1	10	32
05:00 PM	0	1	0	0	1	0	0	0	0	0	0	0	0	0	0	0	1	0	0	1	2
05:15 PM	0	0	0	0	0	0	0	0	0	0	0	0	0	0	0	1	0	0	0	1	1
05:30 PM	0	1	0	0	1	0	0	0	0	0	0	1	1	0	2	0	0	0	0	0	3
05:45 PM	0	0	0	0	0	0	1	0	0	1	0	1	0	0	1	0	0	0	0	0	2
Total	0	2	0	0	2	0	1	0	0	1	0	2	1	0	3	1	1	0	0	2	8
Grand Total	2	7	0	0	9	3	1	0	0	4	1	8	4	2	15	1	8	2	1	12	40
Apprch %	22.2	77.8	0	0		75	25	0	0		6.7	53.3	26.7	13.3		8.3	66.7	16.7	8.3		
Total %	5	17.5	0	0	22.5	7.5	2.5	0	0	10	2.5	20	10	5	37.5	2.5	20	5	2.5	30	

	Carnelian Street Southbound					Baseline Road Westbound					Carnelian Street Northbound					Baseline Road Eastbound					
Start Time	Left	Thru	Right	RoR	App. Total		Thru	Right	RoR	App. Total		Thru	Right	RoR	App. Total		Thru	Right	RoR	App. Total	Int. Total
Peak Hour Analysis From 05:00 PM to 05:45 PM - Peak 1 of 1																					
Peak Hour for Entire Intersection Begins at 05:00 PM																					
05:00 PM	0	1	0	0	1	0	0	0	0	0	0	0	0	0	0	0	1	0	0	1	2
05:15 PM	0	0	0	0	0	0	0	0	0	0	0	0	0	0	0	1	0	0	0	1	1
05:30 PM	0	1	0	0	1	0	0	0	0	0	0	1	1	0	2	0	0	0	0	0	3
05:45 PM	0	0	0	0	0	0	1	0	0	1	0	1	0	0	1	0	0	0	0	0	2
Total Volume	0	2	0	0	2	0	1	0	0	1	0	2	1	0	3	1	1	0	0	2	8
% App. Total	0	100	0	0		0	100	0	0		0	66.7	33.3	0		50	50	0	0		
PHF	.000	.500	.000	.000	.500	.000	.250	.000	.000	.250	.000	.500	.250	.000	.375	.250	.250	.000	.000	.500	.667

Counts Unlimited Inc.
25286 Jaclyn Avenue
Moreno Valley, CA 92557
951-485-7934

City of Rancho Cucamonga
N/S: Carnelian Street
E/W: Baseline Road
Weather: Sunny

File Name : RNCCABAPM
Site Code : 9150024
Start Date : 6/2/2009
Page No : 2

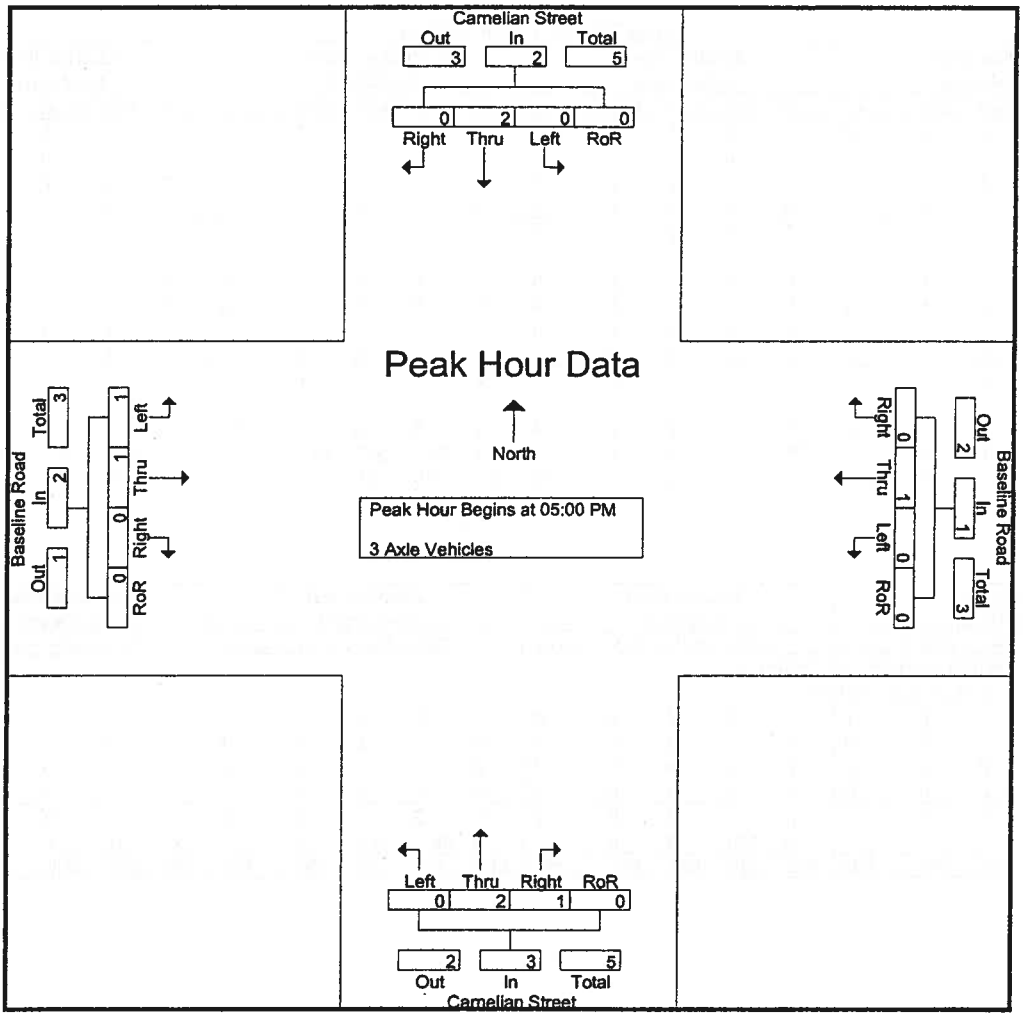

Peak Hour Analysis From 05:00 PM to 05:45 PM - Peak 1 of 1

Peak Hour for Each Approach Begins at:

	05:00 PM					05:00 PM					05:00 PM					05:00 PM				
+0 mins.	0	1	0	0	1	0	0	0	0	0	0	0	0	0	0	0	1	0	0	1
+15 mins.	0	0	0	0	0	0	0	0	0	0	0	0	0	0	0	1	0	0	0	1
+30 mins.	0	1	0	0	1	0	0	0	0	0	0	1	1	0	2	0	0	0	0	0
+45 mins.	0	0	0	0	0	0	1	0	0	1	0	1	0	0	1	0	0	0	0	0
Total Volume	0	2	0	0	2	0	1	0	0	1	0	2	1	0	3	1	1	0	0	2
% App. Total	0	100	0	0		0	100	0	0		0	66.7	33.3	0		50	50	0	0	
PHF	.000	.500	.000	.000	.500	.000	.250	.000	.000	.250	.000	.500	.250	.000	.375	.250	.250	.000	.000	.500

Counts Unlimited Inc.
25286 Jaclyn Avenue
Moreno Valley, CA 92557
951-485-7934

City of Rancho Cucamonga
N/S: Carnelian Street
E/W: Baseline Road
Weather: Sunny

File Name : RNCCABAPM
Site Code : 9150024
Start Date : 6/2/2009
Page No : 1

Groups Printed- 4+ Axle Trucks

	Carnelian Street Southbound					Baseline Road Westbound					Carnelian Street Northbound					Baseline Road Eastbound					
Start Time	Left	Thru	Right	RoR	App. Total	Left	Thru	Right	RoR	App. Total	Left	Thru	Right	RoR	App. Total	Left	Thru	Right	RoR	App. Total	Int. Total
04:00 PM	0	0	0	0	0	0	0	0	0	0	0	1	0	0	1	0	0	0	0	0	1
04:15 PM	0	0	0	0	0	0	0	0	0	0	0	1	0	0	1	0	0	0	0	0	1
04:30 PM	0	1	0	0	1	0	0	0	0	0	0	0	0	0	0	0	0	0	0	0	1
04:45 PM	0	1	0	0	1	0	0	0	0	0	0	0	0	0	0	0	0	0	0	0	1
Total	0	2	0	0	2	0	0	0	0	0	0	2	0	0	2	0	0	0	0	0	4
05:00 PM	0	0	0	0	0	0	0	0	0	0	0	0	0	0	0	0	0	0	0	0	0
05:15 PM	0	0	0	0	0	0	0	0	0	0	0	0	0	0	0	0	0	0	0	0	0
05:30 PM	0	0	0	0	0	0	0	0	0	0	0	0	0	0	0	0	0	0	0	0	0
05:45 PM	0	0	0	0	0	0	0	0	0	0	0	0	0	0	0	0	0	0	0	0	0
Total	0	0	0	0	0	0	0	0	0	0	0	0	0	0	0	0	0	0	0	0	0
Grand Total	0	2	0	0	2	0	0	0	0	0	0	2	0	0	2	0	0	0	0	0	4
Apprch %	0	100	0	0		0	0	0	0		0	100	0	0		0	0	0	0		
Total %	0	50	0	0	50	0	0	0	0	0	0	50	0	0	50	0	0	0	0	0	

	Carnelian Street Southbound					Baseline Road Westbound					Carnelian Street Northbound					Baseline Road Eastbound					
Start Time	Left	Thru	Right	RoR	App. Total	Left	Thru	Right	RoR	App. Total	Left	Thru	Right	RoR	App. Total	Left	Thru	Right	RoR	App. Total	Int. Total
Peak Hour Analysis From 05:00 PM to 05:45 PM - Peak 1 of 1																					
Peak Hour for Entire Intersection Begins at 05:00 PM																					
05:00 PM	0	0	0	0	0	0	0	0	0	0	0	0	0	0	0	0	0	0	0	0	0
05:15 PM	0	0	0	0	0	0	0	0	0	0	0	0	0	0	0	0	0	0	0	0	0
05:30 PM	0	0	0	0	0	0	0	0	0	0	0	0	0	0	0	0	0	0	0	0	0
05:45 PM	0	0	0	0	0	0	0	0	0	0	0	0	0	0	0	0	0	0	0	0	0
Total Volume	0	0	0	0	0	0	0	0	0	0	0	0	0	0	0	0	0	0	0	0	0
% App. Total	0	0	0	0		0	0	0	0		0	0	0	0		0	0	0	0		
PHF	.000	.000	.000	.000	.000	.000	.000	.000	.000	.000	.000	.000	.000	.000	.000	.000	.000	.000	.000	.000	.000

Counts Unlimited Inc.
25286 Jaclyn Avenue
Moreno Valley, CA 92557
951-485-7934

City of Rancho Cucamonga
N/S: Carnelian Street
E/W: Baseline Road
Weather: Sunny

File Name : RNCCABAPM
Site Code : 9150024
Start Date : 6/2/2009
Page No : 2

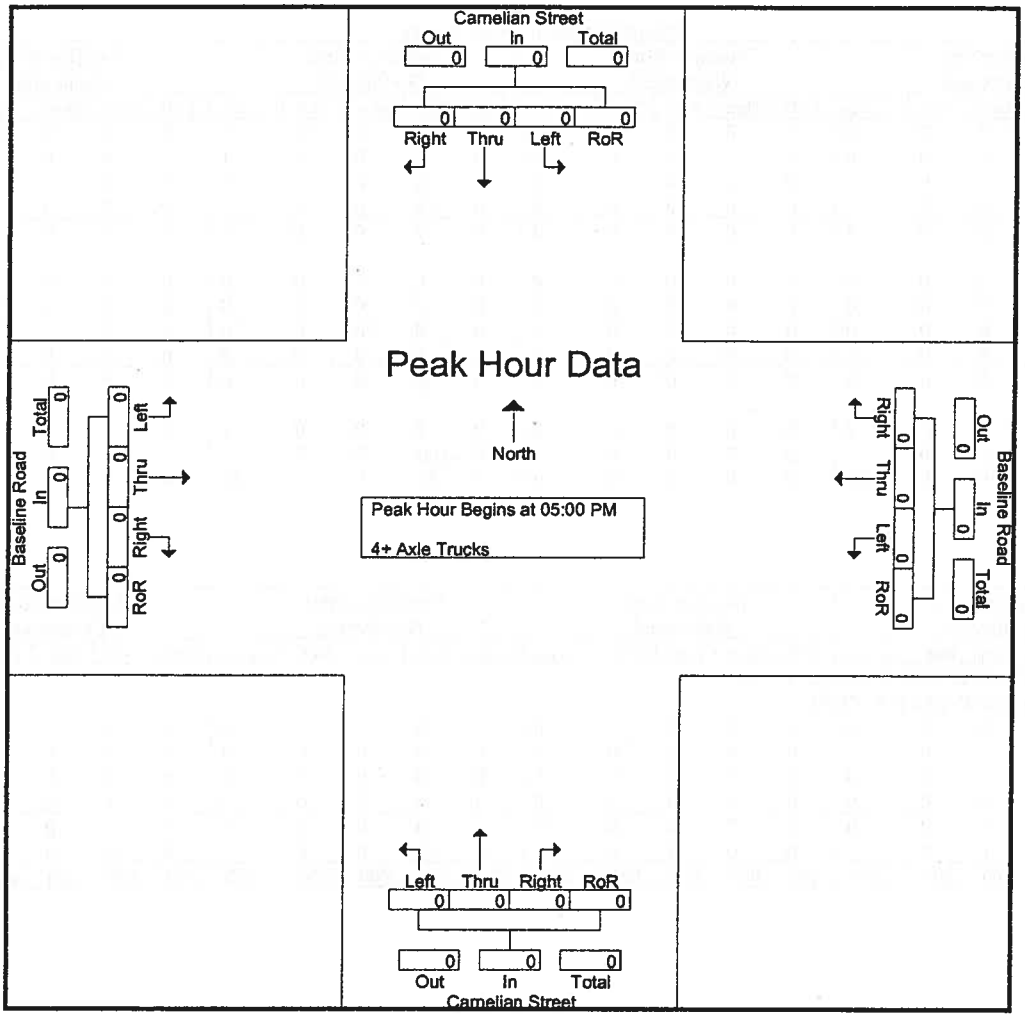

Peak Hour Analysis From 05:00 PM to 05:45 PM - Peak 1 of 1

Peak Hour for Each Approach Begins at:

	05:00 PM					05:00 PM					05:00 PM					05:00 PM				
+0 mins.	0	0	0	0	0	0	0	0	0	0	0	0	0	0	0	0	0	0	0	0
+15 mins.	0	0	0	0	0	0	0	0	0	0	0	0	0	0	0	0	0	0	0	0
+30 mins.	0	0	0	0	0	0	0	0	0	0	0	0	0	0	0	0	0	0	0	0
+45 mins.	0	0	0	0	0	0	0	0	0	0	0	0	0	0	0	0	0	0	0	0
Total Volume	0	0	0	0	0	0	0	0	0	0	0	0	0	0	0	0	0	0	0	0
% App. Total	0	0	0	0		0	0	0	0		0	0	0	0		0	0	0	0	
PHF	.000	.000	.000	.000	.000	.000	.000	.000	.000	.000	.000	.000	.000	.000	.000	.000	.000	.000	.000	.000

PASSENGER CAR EQUIVALENCY PEAK HOUR COUNT SUMMARY

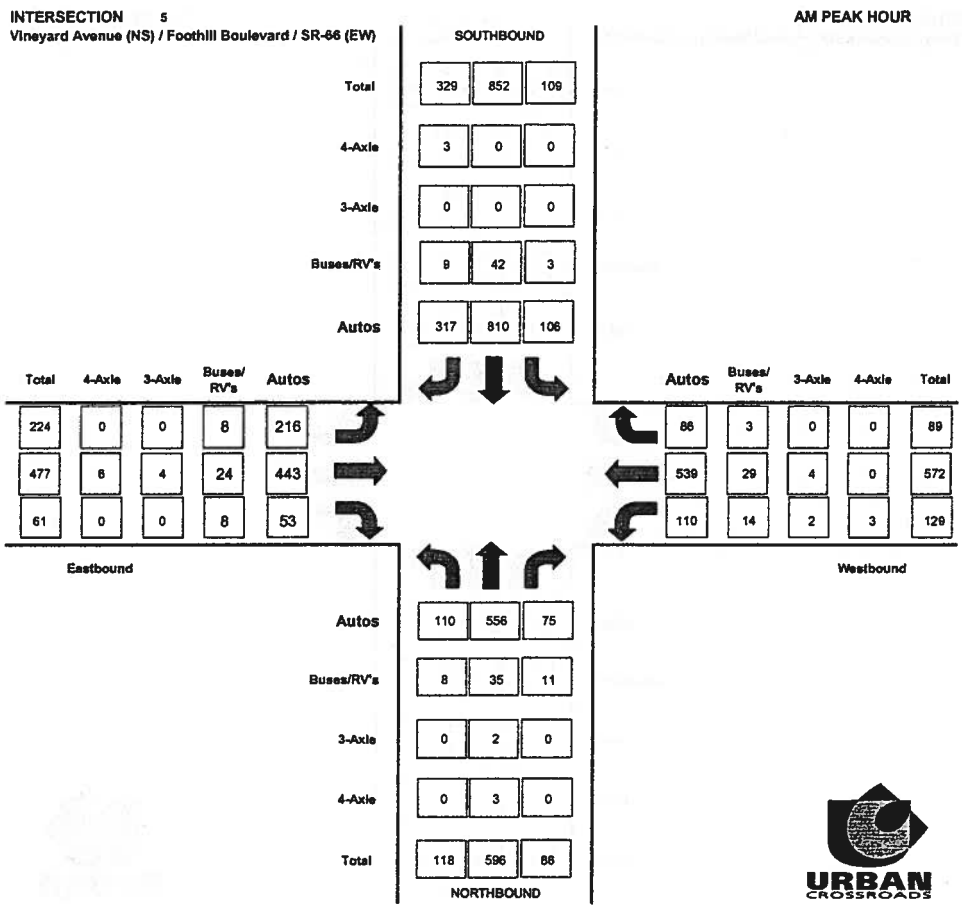

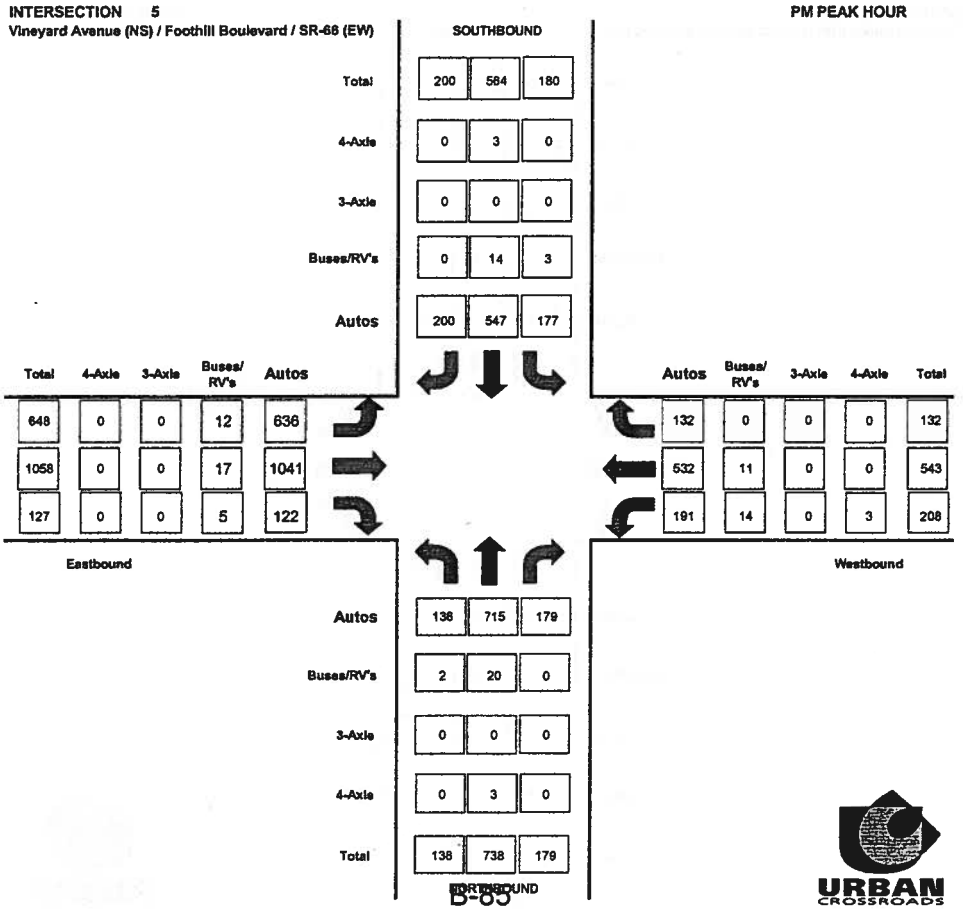

INTERSECTION 5 — **AM PEAK HOUR**

Vineyard Avenue (NS) / Foothill Boulevard / SR-66 (EW)

SOUTHBOUND

Total	329	852	109
4-Axle	3	0	0
3-Axle	0	0	0
Buses/RV's	9	42	3
Autos	317	810	106

Eastbound

Total	4-Axle	3-Axle	Buses/ RV's	Autos
224	0	0	8	216
477	6	4	24	443
61	0	0	8	53

Westbound

Autos	Buses/ RV's	3-Axle	4-Axle	Total
86	3	0	0	89
539	29	4	0	572
110	14	2	3	129

NORTHBOUND

Autos	110	556	75
Buses/RV's	8	35	11
3-Axle	0	2	0
4-Axle	0	3	0
Total	118	596	86

URBAN CROSSROADS

INTERSECTION 5 — **PM PEAK HOUR**

Vineyard Avenue (NS) / Foothill Boulevard / SR-66 (EW)

SOUTHBOUND

Total	200	564	180
4-Axle	0	3	0
3-Axle	0	0	0
Buses/RV's	0	14	3
Autos	200	547	177

Eastbound

Total	4-Axle	3-Axle	Buses/ RV's	Autos
648	0	0	12	636
1058	0	0	17	1041
127	0	0	5	122

Westbound

Autos	Buses/ RV's	3-Axle	4-Axle	Total
132	0	0	0	132
532	11	0	0	543
191	14	0	3	208

NORTHBOUND

Autos	136	715	179
Buses/RV's	2	20	0
3-Axle	0	0	0
4-Axle	0	3	0
Total	138	738	179

URBAN CROSSROADS

U:\Us\Jobs_08800-07000\08700-08799\Excel\Existing Vol\2 Graphics Summary

RAW PEAK HOUR COUNT SUMMARY

INTERSECTION 5
Vineyard Avenue (NS) / Foothill Boulevard / SR-66 (EW)

AM PEAK HOUR

SOUTHBOUND

Total	324	838	108
4-Axle	1	0	0
3-Axle	0	0	0
Buses/RV's	6	28	2
Autos	317	810	106

Total	4-Axle	3-Axle	Buses/ RV's	Autos
221	0	0	5	216
483	2	2	16	443
58	0	0	5	53

Eastbound

Autos	Buses/ RV's	3-Axle	4-Axle	Total
86	2	0	0	88
539	19	2	0	560
110	9	1	1	121

Westbound

Autos	110	556	75
Buses/RV's	5	23	7
3-Axle	0	1	0
4-Axle	0	1	0
Total	115	581	82

NORTHBOUND

URBAN CROSSROADS

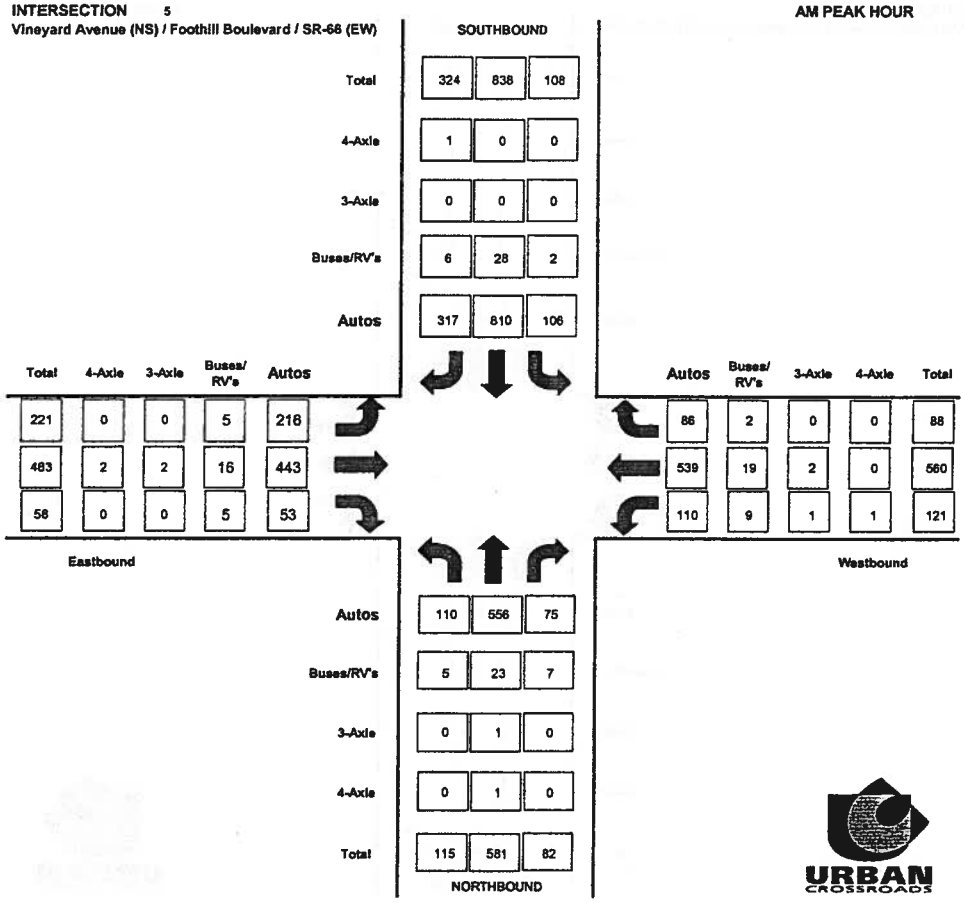

INTERSECTION 5
Vineyard Avenue (NS) / Foothill Boulevard / SR-66 (EW)

PM PEAK HOUR

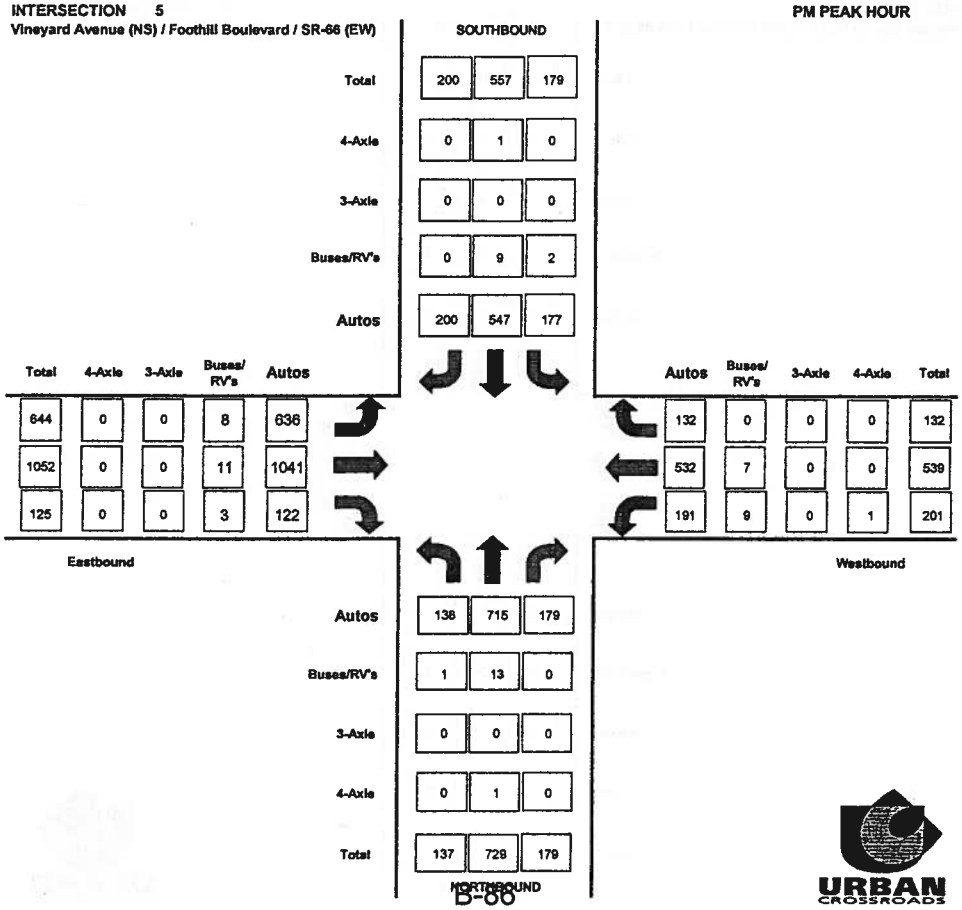

SOUTHBOUND

Total	200	557	179
4-Axle	0	1	0
3-Axle	0	0	0
Buses/RV's	0	9	2
Autos	200	547	177

Total	4-Axle	3-Axle	Buses/ RV's	Autos
644	0	0	8	636
1052	0	0	11	1041
125	0	0	3	122

Eastbound

Autos	Buses/ RV's	3-Axle	4-Axle	Total
132	0	0	0	132
532	7	0	0	539
191	9	0	1	201

Westbound

Autos	138	715	179
Buses/RV's	1	13	0
3-Axle	0	0	0
4-Axle	0	1	0
Total	137	729	179

NORTHBOUND

URBAN CROSSROADS

U:\Lic\Jobs_08800-07000\08780-06784\Excel\Existing Vol\2 Graphics Summary_Non PCE

Counts Unlimited Inc.
25286 Jaclyn Avenue
Moreno Valley, CA 92557
951-485-7934

City of Rancho Cucamonga
N/S: Vineyard Avenue
E/W: Foothill Boulevard
Weather: Sunny

File Name : RNCVIFOAM
Site Code : 9150093
Start Date : 5/27/2009
Page No : 1

Groups Printed- Passenger Vehicles - Large 2 Axle Vehicles - 3 Axle Vehicles - 4+ Axle Trucks

	Vineyard Avenue Southbound					Foothill Boulevard Westbound					Vineyard Avenue Northbound					Foothill Boulevard Eastbound					
Start Time	Left	Thru	Right	RoR	App. Total	Left	Thru	Right	RoR	App. Total	Left	Thru	Right	RoR	App. Total	Left	Thru	Right	RoR	App. Total	Int. Total
07:00 AM	16	138	13	28	195	10	102	4	2	118	16	97	1	4	118	49	73	5	6	133	564
07:15 AM	20	221	33	31	305	27	136	30	8	201	28	192	14	9	243	65	82	9	5	161	910
07:30 AM	28	243	66	25	362	33	171	17	8	229	30	174	10	9	223	65	98	5	6	174	988
07:45 AM	46	219	57	44	366	37	141	7	3	188	30	107	14	2	153	44	168	14	2	228	935
Total	110	821	169	128	1228	107	550	58	21	736	104	570	39	24	737	223	421	33	19	696	3397
08:00 AM	14	155	44	24	237	24	112	9	6	151	27	108	9	15	159	47	115	11	6	179	726
08:15 AM	21	126	40	18	205	24	108	8	5	145	25	91	22	10	148	57	138	19	7	221	719
08:30 AM	26	119	25	26	196	22	125	7	5	159	28	115	19	24	186	65	102	11	7	185	726
08:45 AM	21	100	23	23	167	14	128	6	1	149	17	96	14	17	144	47	129	7	4	187	647
Total	82	500	132	91	805	84	473	30	17	604	97	410	64	66	637	216	484	48	24	772	2818
Grand Total	192	1321	301	219	2033	191	1023	88	38	1340	201	980	103	90	1374	439	905	81	43	1468	6215
Apprch %	9.4	65	14.8	10.8		14.3	76.3	6.6	2.8		14.6	71.3	7.5	6.6		29.9	61.6	5.5	2.9		
Total %	3.1	21.3	4.8	3.5	32.7	3.1	16.5	1.4	0.6	21.6	3.2	15.8	1.7	1.4	22.1	7.1	14.6	1.3	0.7	23.6	
Passenger Vehicles		1274																			
% Passenger Vehicles	96.9	96.4	97.7	98.6	96.9	92.1	96.3	96.6	97.4	95.7	95.5	95	94.2	96.7	95.1	97.5	95.5	88.9	93	95.6	96
Large 2 Axle Vehicles																					
% Large 2 Axle Vehicles	3.1	3.5	2	1.4	3	6.3	3.3	3.4	2.6	3.7	4.5	4.2	5.8	3.3	4.3	2.5	3.6	11.1	7	3.8	3.6
3 Axle Vehicles																					
% 3 Axle Vehicles	0	0.1	0	0	0	0.5	0.3	0	0	0.3	0	0.6	0	0	0.4	0	0.4	0	0	0.3	0.2
4+ Axle Trucks	0	0	1	0	1	2	1	0	0	3	0	2	0	0	2	0	4	0	0	4	10
% 4+ Axle Trucks																					

	Vineyard Avenue Southbound					Foothill Boulevard Westbound					Vineyard Avenue Northbound					Foothill Boulevard Eastbound					
Start Time	Left	Thru	Right	RoR	App. Total	Left	Thru	Right	RoR	App. Total	Left	Thru	Right	RoR	App. Total	Left	Thru	Right	RoR	App. Total	Int. Total
Peak Hour Analysis From 07:00 AM to 08:45 AM - Peak 1 of 1																					
Peak Hour for Entire Intersection Begins at 07:15 AM																					
07:15 AM	20	221	33	31	305	27	136	**30**	**8**	201	28	**192**	**14**	9	**243**	**65**	82	9	5	161	910
07:30 AM	28	**243**	**66**	25	362	33	**171**	17	8	**229**	**30**	174	10	9	223	65	98	5	**6**	174	**988**
07:45 AM	**46**	219	57	**44**	**366**	**37**	141	7	3	188	30	107	14	2	153	44	**168**	**14**	2	**228**	935
08:00 AM	14	155	44	24	237	24	112	9	6	151	27	108	9	**15**	159	47	115	11	6	179	726
Total Volume	108	838	200	124	1270	121	560	63	25	769	115	581	47	35	778	221	463	39	19	742	3559
% App. Total	8.5	66	15.7	9.8		15.7	72.8	8.2	3.3		14.8	74.7	6	4.5		29.8	62.4	5.3	2.6		
PHF	.587	.862	.758	.705	.867	.818	.819	.525	.781	.840	.958	.757	.839	.583	.800	.850	.689	.696	.792	.814	.901

Counts Unlimited Inc.
25286 Jaclyn Avenue
Moreno Valley, CA 92557
951-485-7934

City of Rancho Cucamonga
N/S: Vineyard Avenue
E/W: Foothill Boulevard
Weather: Sunny

File Name : RNCVIFOAM
Site Code : 9150093
Start Date : 5/27/2009
Page No : 2

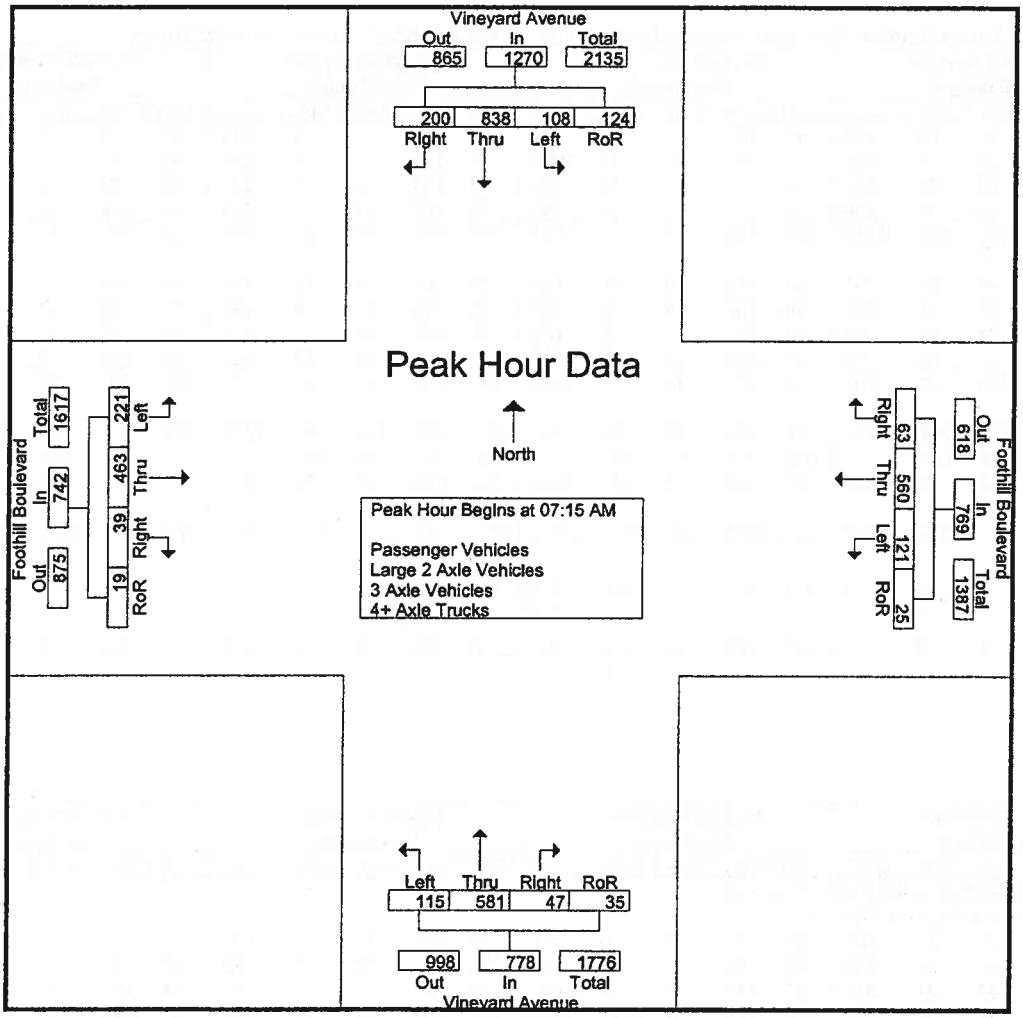

Peak Hour Analysis From 07:00 AM to 08:45 AM - Peak 1 of 1

Peak Hour for Each Approach Begins at:

	07:15 AM					07:15 AM					07:15 AM					07:45 AM				
+0 mins.	20	221	33	31	305	27	136	**30**	**8**	201	28	**192**	**14**	9	**243**	44	**168**	14	2	**228**
+15 mins.	28	**243**	**66**	25	362	33	**171**	17	8	**229**	**30**	174	10	9	223	47	115	11	6	179
+30 mins.	**46**	219	57	**44**	**366**	**37**	141	7	3	188	30	107	14	2	153	57	138	**19**	**7**	221
+45 mins.	14	155	44	24	237	24	112	9	6	151	27	108	9	**15**	159	**65**	102	11	7	185
Total Volume	108	838	200	124	1270	121	560	63	25	769	115	581	47	35	778	213	523	55	22	813
% App. Total	8.5	66	15.7	9.8		15.7	72.8	8.2	3.3		14.8	74.7	6	4.5		26.2	64.3	6.8	2.7	
PHF	.587	.862	.758	.705	.867	.818	.819	.525	.781	.840	.958	.757	.839	.583	.800	.819	.778	.724	.786	.891

Counts Unlimited Inc.
25286 Jaclyn Avenue
Moreno Valley, CA 92557
951-485-7934

City of Rancho Cucamonga
N/S: Vineyard Avenue
E/W: Foothill Boulevard
Weather: Sunny

File Name : RNCVIFOAM
Site Code : 9150093
Start Date : 5/27/2009
Page No : 1

Groups Printed- Passenger Vehicles

	Vineyard Avenue Southbound					Foothill Boulevard Westbound					Vineyard Avenue Northbound					Foothill Boulevard Eastbound					
Start Time	Left	Thru	Right	RoR	App. Total	Left	Thru	Right	RoR	App. Total	Left	Thru	Right	RoR	App. Total	Left	Thru	Right	RoR	App. Total	Int. Total
07:00 AM	16	129	13	28	186	10	101	3	2	116	15	95	1	4	115	45	66	5	6	122	539
07:15 AM	20	214	32	30	296	24	131	29	8	192	28	185	10	8	231	63	80	8	5	156	875
07:30 AM	27	231	65	24	347	31	165	16	8	220	28	167	9	9	213	64	94	5	5	168	948
07:45 AM	45	215	55	44	359	35	137	7	3	182	27	103	14	2	146	43	161	14	2	220	907
Total	108	789	165	126	1188	100	534	55	21	710	98	550	34	23	705	215	401	32	18	666	3269
08:00 AM	14	150	43	24	231	20	106	9	6	141	27	101	8	15	151	46	108	8	6	168	691
08:15 AM	19	121	39	18	197	24	105	8	5	142	23	86	22	9	140	56	134	15	6	211	690
08:30 AM	26	116	24	25	191	19	122	7	4	152	28	103	19	24	174	65	99	10	6	180	697
08:45 AM	19	98	23	23	163	13	118	6	1	138	16	91	14	16	137	46	122	7	4	179	617
Total	78	485	129	90	782	76	451	30	16	573	94	381	63	64	602	213	463	40	22	738	2695
Grand Total	186	1274	294	216	1970	176	985	85	37	1283	192	931	97	87	1307	428	864	72	40	1404	5964
Apprch %	9.4	64.7	14.9	11		13.7	76.8	6.6	2.9		14.7	71.2	7.4	6.7		30.5	61.5	5.1	2.8		
Total %	3.1	21.4	4.9	3.6	33	3	16.5	1.4	0.6	21.5	3.2	15.6	1.6	1.5	21.9	7.2	14.5	1.2	0.7	23.5	

	Vineyard Avenue Southbound					Foothill Boulevard Westbound					Vineyard Avenue Northbound					Foothill Boulevard Eastbound					
Start Time	Left	Thru	Right	RoR	App. Total		Thru	Right	RoR	App. Total		Thru	Right	RoR	App. Total		Thru	Right	RoR	App. Total	Int. Total
Peak Hour Analysis From 07:15 AM to 08:00 AM - Peak 1 of 1																					
Peak Hour for Entire Intersection Begins at 07:15 AM																					
07:15 AM	20	214	32	30	296	24	131	**29**	**8**	192	**28**	**185**	10	8	**231**	63	80	8	5	156	875
07:30 AM	27	**231**	**65**	24	347	31	**165**	16	8	**220**	28	167	9	9	213	**64**	94	5	5	168	**948**
07:45 AM	**45**	215	55	**44**	**359**	**35**	137	7	3	182	27	103	**14**	2	146	43	**161**	**14**	2	**220**	907
08:00 AM	14	150	43	24	231	20	106	9	6	141	27	101	8	**15**	151	46	108	8	6	168	691
Total Volume	106	810	195	122	1233	110	539	61	25	735	110	556	41	34	741	216	443	35	18	712	3421
% App. Total	8.6	65.7	15.8	9.9		15	73.3	8.3	3.4		14.8	75	5.5	4.6		30.3	62.2	4.9	2.5		
PHF	.589	.877	.750	.693	.859	.786	.817	.526	.781	.835	.982	.751	.732	.567	.802	.844	.688	.625	.750	.809	.902

Counts Unlimited Inc.
25286 Jaclyn Avenue
Moreno Valley, CA 92557
951-485-7934

City of Rancho Cucamonga
N/S: Vineyard Avenue
E/W: Foothill Boulevard
Weather: Sunny

File Name : RNCVIFOAM
Site Code : 9150093
Start Date : 5/27/2009
Page No : 2

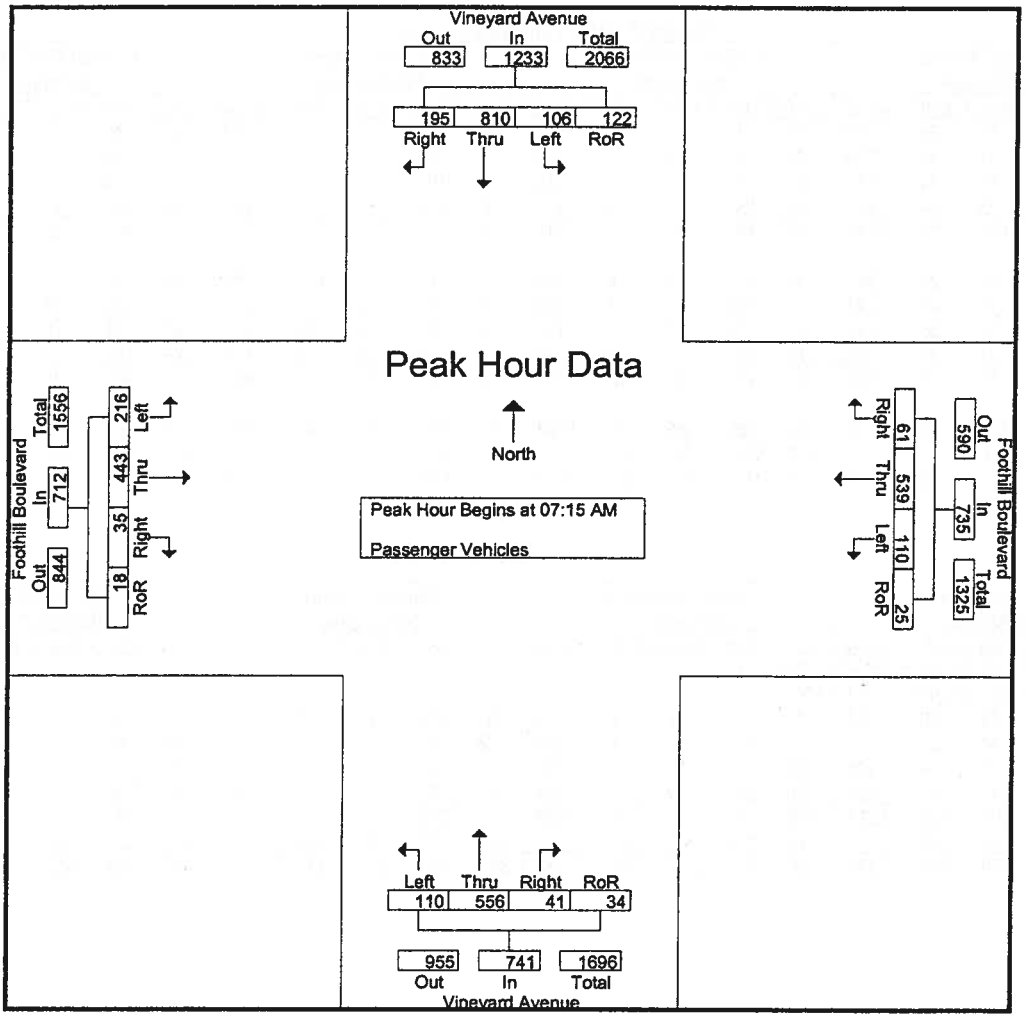

Peak Hour Analysis From 07:15 AM to 08:00 AM - Peak 1 of 1

Peak Hour for Each Approach Begins at:

	07:15 AM					07:15 AM					07:15 AM					07:15 AM				
+0 mins.	20	214	32	30	296	24	131	**29**	**8**	192	**28**	**185**	10	8	**231**	63	80	8	5	156
+15 mins.	27	**231**	**65**	24	347	31	**165**	16	8	**220**	28	167	9	9	213	**64**	94	5	5	168
+30 mins.	**45**	215	55	**44**	**359**	**35**	137	7	3	182	27	103	**14**	2	146	43	**161**	**14**	2	**220**
+45 mins.	14	150	43	24	231	20	106	9	6	141	27	101	8	**15**	151	46	108	8	**6**	168
Total Volume	106	810	195	122	1233	110	539	61	25	735	110	556	41	34	741	216	443	35	18	712
% App. Total	8.6	65.7	15.8	9.9		15	73.3	8.3	3.4		14.8	75	5.5	4.6		30.3	62.2	4.9	2.5	
PHF	.589	.877	.750	.693	.859	.786	.817	.526	.781	.835	.982	.751	.732	.567	.802	.844	.688	.625	.750	.809

Counts Unlimited Inc.
25286 Jaclyn Avenue
Moreno Valley, CA 92557
951-485-7934

City of Rancho Cucamonga
N/S: Vineyard Avenue
E/W: Foothill Boulevard
Weather: Sunny

File Name : RNCVIFOAM
Site Code : 9150093
Start Date : 5/27/2009
Page No : 1

Groups Printed- Large 2 Axle Vehicles

	Vineyard Avenue Southbound					Foothill Boulevard Westbound					Vineyard Avenue Northbound					Foothill Boulevard Eastbound					
Start Time	Left	Thru	Right	RoR	App. Total	Left	Thru	Right	RoR	App. Total	Left	Thru	Right	RoR	App. Total	Left	Thru	Right	RoR	App. Total	Int. Total
07:00 AM	0	8	0	0	8	0	1	1	0	2	1	2	0	0	3	4	6	0	0	10	23
07:15 AM	0	7	1	1	9	2	5	1	0	8	0	6	4	1	11	2	1	1	0	4	32
07:30 AM	1	12	1	1	15	1	5	1	0	7	2	6	1	0	9	1	4	0	1	6	37
07:45 AM	1	4	1	0	6	2	4	0	0	6	3	4	0	0	7	1	7	0	0	8	27
Total	2	31	3	2	38	5	15	3	0	23	6	18	5	1	30	8	18	1	1	28	119
08:00 AM	0	5	1	0	6	4	5	0	0	9	0	7	1	0	8	1	4	3	0	8	31
08:15 AM	2	5	1	0	8	0	3	0	0	3	2	4	0	1	7	1	3	4	1	9	27
08:30 AM	0	3	1	1	5	2	3	0	1	6	0	8	0	0	8	0	3	1	1	5	24
08:45 AM	2	2	0	0	4	1	8	0	0	9	1	4	0	1	6	1	5	0	0	6	25
Total	4	15	3	1	23	7	19	0	1	27	3	23	1	2	29	3	15	8	2	28	107
Grand Total	6	46	6	3	61	12	34	3	1	50	9	41	6	3	59	11	33	9	3	56	226
Apprch %	9.8	75.4	9.8	4.9		24	68	6	2		15.3	69.5	10.2	5.1		19.6	58.9	16.1	5.4		
Total %	2.7	20.4	2.7	1.3	27	5.3	15	1.3	0.4	22.1	4	18.1	2.7	1.3	26.1	4.9	14.6	4	1.3	24.8	

	Vineyard Avenue Southbound					Foothill Boulevard Westbound					Vineyard Avenue Northbound					Foothill Boulevard Eastbound					
Start Time	Left	Thru	Right	RoR	App. Total		Thru	Right	RoR	App. Total		Thru	Right	RoR	App. Total		Thru	Right	RoR	App. Total	Int. Total
Peak Hour Analysis From 07:15 AM to 08:00 AM - Peak 1 of 1																					
Peak Hour for Entire Intersection Begins at 07:15 AM																					
07:15 AM	0	7	1	1	9	2	5	1	0	8	0	6	4	1	11	2	1	1	0	4	32
07:30 AM	1	12	1	1	15	1	5	1	0	7	2	6	1	0	9	1	4	0	1	6	37
07:45 AM	1	4	1	0	6	2	4	0	0	6	3	4	0	0	7	1	7	0	0	8	27
08:00 AM	0	5	1	0	6	4	5	0	0	9	0	7	1	0	8	1	4	3	0	8	31
Total Volume	2	28	4	2	36	9	19	2	0	30	5	23	6	1	35	5	16	4	1	26	127
% App. Total	5.6	77.8	11.1	5.6		30	63.3	6.7	0		14.3	65.7	17.1	2.9		19.2	61.5	15.4	3.8		
PHF	.500	.583	1.000	.500	.600	.563	.950	.500	.000	.833	.417	.821	.375	.250	.795	.625	.571	.333	.250	.813	.858

Counts Unlimited Inc.
25286 Jaclyn Avenue
Moreno Valley, CA 92557
951-485-7934

City of Rancho Cucamonga
N/S: Vineyard Avenue
E/W: Foothill Boulevard
Weather: Sunny

File Name : RNCVIFOAM
Site Code : 9150093
Start Date : 5/27/2009
Page No : 2

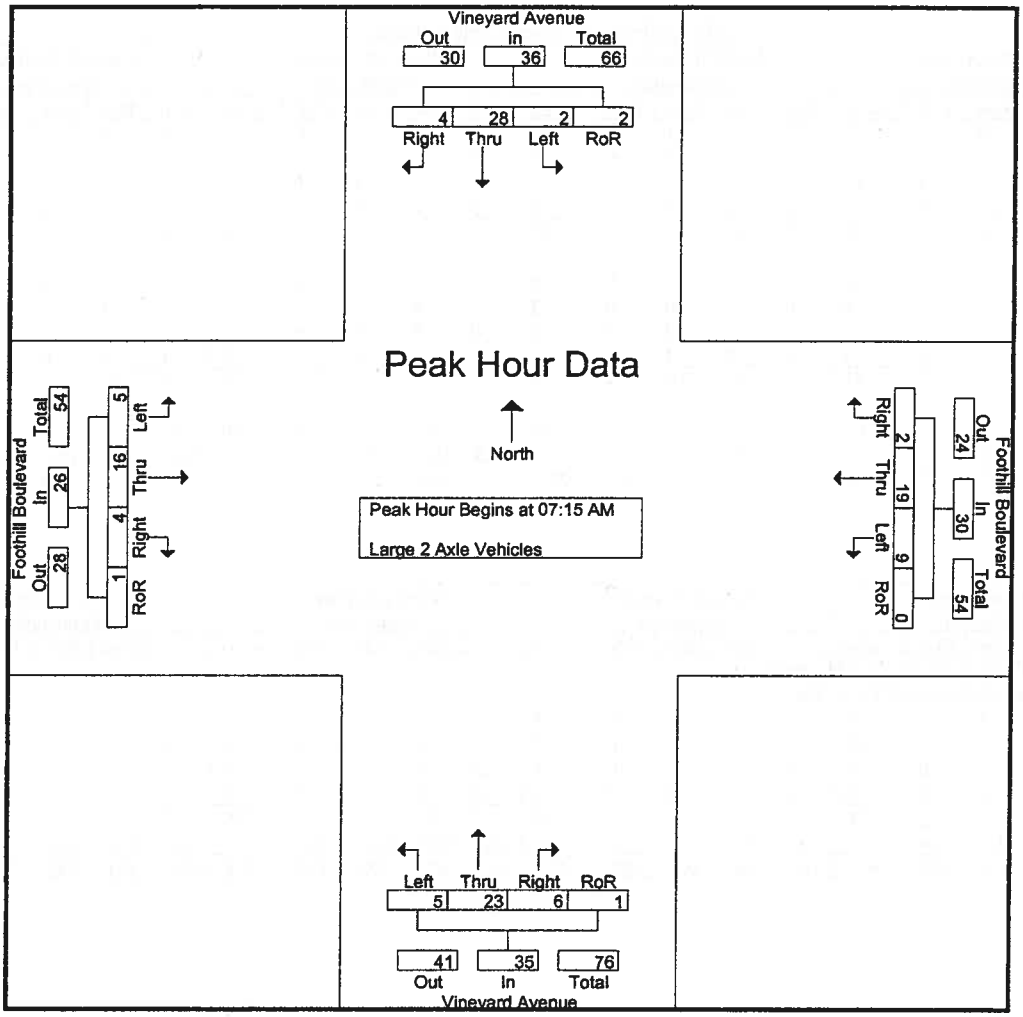

Peak Hour Analysis From 07:15 AM to 08:00 AM - Peak 1 of 1

Peak Hour for Each Approach Begins at:

	07:15 AM					07:15 AM					07:15 AM					07:15 AM				
+0 mins.	0	7	1	1	9	2	5	1	0	8	0	6	4	1	11	2	1	1	0	4
+15 mins.	1	12	1	1	15	1	5	1	0	7	2	6	1	0	9	1	4	0	1	6
+30 mins.	1	4	1	0	6	2	4	0	0	6	3	4	0	0	7	1	7	0	0	8
+45 mins.	0	5	1	0	6	4	5	0	0	9	0	7	1	0	8	1	4	3	0	8
Total Volume	2	28	4	2	36	9	19	2	0	30	5	23	6	1	35	5	16	4	1	26
% App. Total	5.6	77.8	11.1	5.6		30	63.3	6.7	0		14.3	65.7	17.1	2.9		19.2	61.5	15.4	3.8	
PHF	.500	.583	1.000	.500	.600	.563	.950	.500	.000	.833	.417	.821	.375	.250	.795	.625	.571	.333	.250	.813

Counts Unlimited Inc.
25286 Jaclyn Avenue
Moreno Valley, CA 92557
951-485-7934

City of Rancho Cucamonga
N/S: Vineyard Avenue
E/W: Foothill Boulevard
Weather: Sunny

File Name : RNCVIFOAM
Site Code : 9150093
Start Date : 5/27/2009
Page No : 1

Groups Printed- 3 Axle Vehicles

	Vineyard Avenue Southbound					Foothill Boulevard Westbound					Vineyard Avenue Northbound					Foothill Boulevard Eastbound					
Start Time	Left	Thru	Right	RoR	App. Total	Left	Thru	Right	RoR	App. Total	Left	Thru	Right	RoR	App. Total	Left	Thru	Right	RoR	App. Total	Int. Total
07:00 AM	0	1	0	0	1	0	0	0	0	0	0	0	0	0	0	0	0	0	0	0	1
07:15 AM	0	0	0	0	0	1	0	0	0	1	0	1	0	0	1	0	1	0	0	1	3
07:30 AM	0	0	0	0	0	0	1	0	0	1	0	0	0	0	0	0	0	0	0	0	1
07:45 AM	0	0	0	0	0	0	0	0	0	0	0	0	0	0	0	0	0	0	0	0	0
Total	0	1	0	0	1	1	1	0	0	2	0	1	0	0	1	0	1	0	0	1	5
08:00 AM	0	0	0	0	0	0	1	0	0	1	0	0	0	0	0	0	1	0	0	1	2
08:15 AM	0	0	0	0	0	0	0	0	0	0	0	1	0	0	1	0	1	0	0	1	2
08:30 AM	0	0	0	0	0	0	0	0	0	0	0	3	0	0	3	0	0	0	0	0	3
08:45 AM	0	0	0	0	0	0	1	0	0	1	0	1	0	0	1	0	1	0	0	1	3
Total	0	0	0	0	0	0	2	0	0	2	0	5	0	0	5	0	3	0	0	3	10
Grand Total	0	1	0	0	1	1	3	0	0	4	0	6	0	0	6	0	4	0	0	4	15
Apprch %	0	100	0	0		25	75	0	0		0	100	0	0		0	100	0	0		
Total %	0	6.7	0	0	6.7	6.7	20	0	0	26.7	0	40	0	0	40	0	26.7	0	0	26.7	

	Vineyard Avenue Southbound					Foothill Boulevard Westbound					Vineyard Avenue Northbound					Foothill Boulevard Eastbound					
Start Time	Left	Thru	Right	RoR	App. Total		Thru	Right	RoR	App. Total		Thru	Right	RoR	App. Total		Thru	Right	RoR	App. Total	Int. Total
Peak Hour Analysis From 07:15 AM to 08:00 AM - Peak 1 of 1																					
Peak Hour for Entire Intersection Begins at 07:15 AM																					
07:15 AM	0	0	0	0	0	1	0	0	0	1	0	1	0	0	1	0	1	0	0	1	3
07:30 AM	0	0	0	0	0	0	1	0	0	1	0	0	0	0	0	0	0	0	0	0	1
07:45 AM	0	0	0	0	0	0	0	0	0	0	0	0	0	0	0	0	0	0	0	0	0
08:00 AM	0	0	0	0	0	0	1	0	0	1	0	0	0	0	0	0	1	0	0	1	2
Total Volume	0	0	0	0	0	1	2	0	0	3	0	1	0	0	1	0	2	0	0	2	6
% App. Total	0	0	0	0		33.3	66.7	0	0		0	100	0	0		0	100	0	0		
PHF	.000	.000	.000	.000	.000	.250	.500	.000	.000	.750	.000	.250	.000	.000	.250	.000	.500	.000	.000	.500	.500

Counts Unlimited Inc.
25286 Jaclyn Avenue
Moreno Valley, CA 92557
951-485-7934

City of Rancho Cucamonga
N/S: Vineyard Avenue
E/W: Foothill Boulevard
Weather: Sunny

File Name : RNCVIFOAM
Site Code : 9150093
Start Date : 5/27/2009
Page No : 2

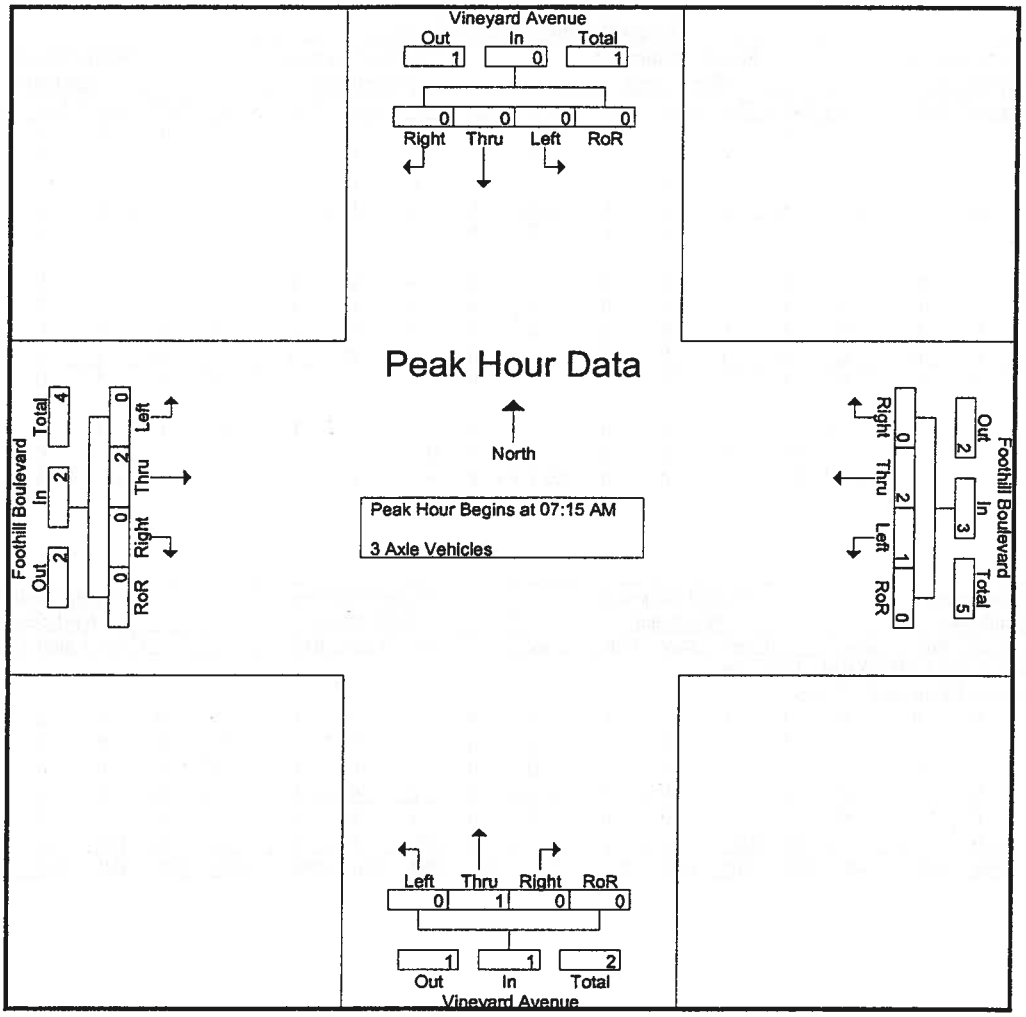

Peak Hour Analysis From 07:15 AM to 08:00 AM - Peak 1 of 1

Peak Hour for Each Approach Begins at:

	07:15 AM					07:15 AM					07:15 AM					07:15 AM				
+0 mins.	0	0	0	0	0	1	0	0	0	1	0	1	0	0	1	0	1	0	0	1
+15 mins.	0	0	0	0	0	0	1	0	0	1	0	0	0	0	0	0	0	0	0	0
+30 mins.	0	0	0	0	0	0	0	0	0	0	0	0	0	0	0	0	0	0	0	0
+45 mins.	0	0	0	0	0	0	1	0	0	1	0	0	0	0	0	0	1	0	0	1
Total Volume	0	0	0	0	0	1	2	0	0	3	0	1	0	0	1	0	2	0	0	2
% App. Total	0	0	0	0		33.3	66.7	0	0		0	100	0	0		0	100	0	0	
PHF	.000	.000	.000	.000	.000	.250	.500	.000	.000	.750	.000	.250	.000	.000	.250	.000	.500	.000	.000	.500

Counts Unlimited Inc.
25286 Jaclyn Avenue
Moreno Valley, CA 92557
951-485-7934

City of Rancho Cucamonga
N/S: Vineyard Avenue
E/W: Foothill Boulevard
Weather: Sunny

File Name : RNCVIFOAM
Site Code : 9150093
Start Date : 5/27/2009
Page No : 1

Groups Printed- 4+ Axle Trucks

	Vineyard Avenue Southbound					Foothill Boulevard Westbound					Vineyard Avenue Northbound					Foothill Boulevard Eastbound					
Start Time	Left	Thru	Right	RoR	App. Total	Left	Thru	Right	RoR	App. Total	Left	Thru	Right	RoR	App. Total	Left	Thru	Right	RoR	App. Total	Int. Total
07:00 AM	0	0	0	0	0	0	0	0	0	0	0	0	0	0	0	0	1	0	0	1	1
07:15 AM	0	0	0	0	0	0	0	0	0	0	0	0	0	0	0	0	0	0	0	0	0
07:30 AM	0	0	0	0	0	1	0	0	0	1	0	1	0	0	1	0	0	0	0	0	2
07:45 AM	0	0	1	0	1	0	0	0	0	0	0	0	0	0	0	0	0	0	0	0	1
Total	0	0	1	0	1	1	0	0	0	1	0	1	0	0	1	0	1	0	0	1	4
08:00 AM	0	0	0	0	0	0	0	0	0	0	0	0	0	0	0	0	2	0	0	2	2
08:15 AM	0	0	0	0	0	0	0	0	0	0	0	0	0	0	0	0	0	0	0	0	0
08:30 AM	0	0	0	0	0	1	0	0	0	1	0	1	0	0	1	0	0	0	0	0	2
08:45 AM	0	0	0	0	0	0	1	0	0	1	0	0	0	0	0	0	1	0	0	1	2
Total	0	0	0	0	0	1	1	0	0	2	0	1	0	0	1	0	3	0	0	3	6
Grand Total	0	0	1	0	1	2	1	0	0	3	0	2	0	0	2	0	4	0	0	4	10
Apprch %	0	0	100	0		66.7	33.3	0	0		0	100	0	0		0	100	0	0		
Total %	0	0	10	0	10	20	10	0	0	30	0	20	0	0	20	0	40	0	0	40	

	Vineyard Avenue Southbound					Foothill Boulevard Westbound					Vineyard Avenue Northbound					Foothill Boulevard Eastbound					
Start Time	Left	Thru	Right	RoR	App. Total		Thru	Right	RoR	App. Total		Thru	Right	RoR	App. Total		Thru	Right	RoR	App. Total	Int. Total
Peak Hour Analysis From 07:15 AM to 08:00 AM - Peak 1 of 1																					
Peak Hour for Entire Intersection Begins at 07:15 AM																					
07:15 AM	0	0	0	0	0	0	0	0	0	0	0	0	0	0	0	0	0	0	0	0	0
07:30 AM	0	0	0	0	0	1	0	0	0	1	0	1	0	0	1	0	0	0	0	0	2
07:45 AM	0	0	1	0	1	0	0	0	0	0	0	0	0	0	0	0	0	0	0	0	1
08:00 AM	0	0	0	0	0	0	0	0	0	0	0	0	0	0	0	0	2	0	0	2	2
Total Volume	0	0	1	0	1	1	0	0	0	1	0	1	0	0	1	0	2	0	0	2	5
% App. Total	0	0	100	0		100	0	0	0		0	100	0	0		0	100	0	0		
PHF	.000	.000	.250	.000	.250	.250	.000	.000	.000	.250	.000	.250	.000	.000	.250	.000	.250	.000	.000	.250	.625

Counts Unlimited Inc.
25286 Jaclyn Avenue
Moreno Valley, CA 92557
951-485-7934

City of Rancho Cucamonga
N/S: Vineyard Avenue
E/W: Foothill Boulevard
Weather: Sunny

File Name : RNCVIFOAM
Site Code : 9150093
Start Date : 5/27/2009
Page No : 2

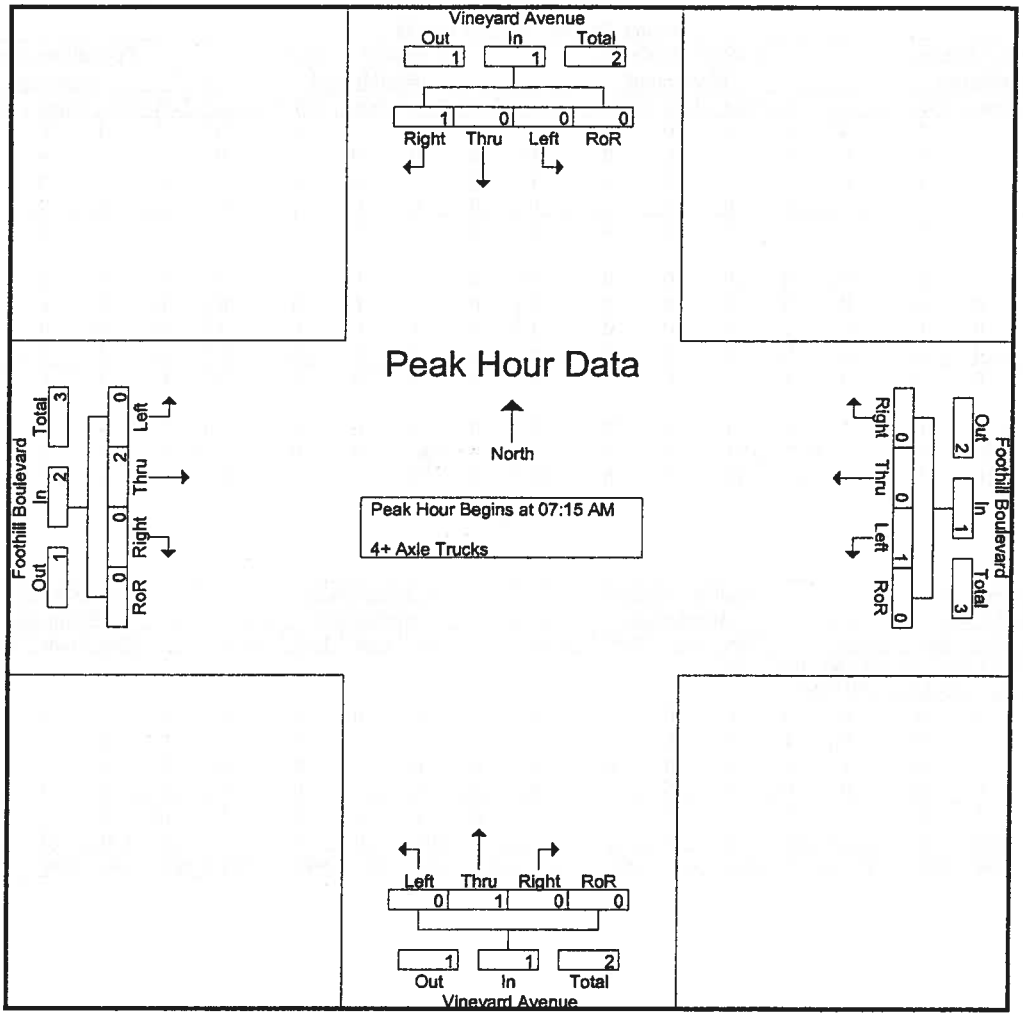

Peak Hour Analysis From 07:15 AM to 08:00 AM - Peak 1 of 1

Peak Hour for Each Approach Begins at:

	07:15 AM					07:15 AM					07:15 AM					07:15 AM				
+0 mins.	0	0	0	0	0	0	0	0	0	0	0	0	0	0	0	0	0	0	0	0
+15 mins.	0	0	0	0	0	1	0	0	0	1	0	1	0	0	1	0	0	0	0	0
+30 mins.	0	0	1	0	1	0	0	0	0	0	0	0	0	0	0	0	0	0	0	0
+45 mins.	0	0	0	0	0	0	0	0	0	0	0	0	0	0	0	0	2	0	0	2
Total Volume	0	0	1	0	1	1	0	0	0	1	0	1	0	0	1	0	2	0	0	2
% App. Total	0	0	100	0		100	0	0	0		0	100	0	0		0	100	0	0	
PHF	.000	.000	.250	.000	.250	.250	.000	.000	.000	.250	.000	.250	.000	.000	.250	.000	.250	.000	.000	.250

Counts Unlimited Inc.
25286 Jaclyn Avenue
Moreno Valley, CA 92557
951-485-7934

City of Rancho Cucamonga
N/S: Vineyard Avenue
E/W: Foothill Boulevard
Weather: Sunny

File Name : RNCVIFOPM
Site Code : 9150093
Start Date : 5/27/2009
Page No : 1

Groups Printed- Passenger Vehicles - Large 2 Axle Vehicles - 3 Axle Vehicles - 4+ Axle Trucks

	Vineyard Avenue Southbound					Foothill Boulevard Westbound					Vineyard Avenue Northbound					Foothill Boulevard Eastbound					
Start Time	Left	Thru	Right	RoR	App. Total	Left	Thru	Right	RoR	App. Total	Left	Thru	Right	RoR	App. Total	Left	Thru	Right	RoR	App. Total	Int. Total
04:00 PM	24	77	18	8	127	25	131	8	3	167	30	230	17	4	281	115	191	5	10	321	896
04:15 PM	37	142	16	21	216	47	118	23	7	195	39	192	30	13	274	119	243	18	13	393	1078
04:30 PM	49	143	41	14	247	59	133	30	12	234	49	181	28	28	286	154	237	7	14	412	1179
04:45 PM	39	144	39	13	235	42	122	18	3	185	24	184	30	12	250	174	234	13	15	436	1106
Total	149	506	114	56	825	173	504	79	25	781	142	787	105	57	1091	562	905	43	52	1562	4259
05:00 PM	45	122	22	15	204	45	130	23	6	204	32	170	22	18	242	156	267	12	17	452	1102
05:15 PM	46	148	36	20	250	55	154	34	6	249	32	194	11	30	267	160	314	21	26	521	1287
05:30 PM	46	104	36	10	196	42	127	18	9	196	55	194	20	16	285	132	241	17	16	406	1083
05:45 PM	47	133	35	26	241	46	115	26	9	196	40	211	24	16	291	128	245	16	9	398	1126
Total	184	507	129	71	891	188	526	101	30	845	159	769	77	80	1085	576	1067	66	68	1777	4598
Grand Total	333	1013	243	127	1716	361	1030	180	55	1626	301	1556	182	137	2176	1138	1972	109	120	3339	8857
Apprch %	19.4	59	14.2	7.4		22.2	63.3	11.1	3.4		13.8	71.5	8.4	6.3		34.1	59.1	3.3	3.6		
Total %	3.8	11.4	2.7	1.4	19.4	4.1	11.6	2	0.6	18.4	3.4	17.6	2.1	1.5	24.6	12.8	22.3	1.2	1.4	37.7	
Passenger Vehicles							1012					1532				1125	1947				
% Passenger Vehicles	99.4	98.2	99.6	99.2	98.7	96.7	98.3	100	100	98.2	98.3	98.5	99.5	99.3	98.6	98.9	98.7	95.4	100	98.7	98.6
Large 2 Axle Vehicles																					
% Large 2 Axle Vehicles	0.6	1.6	0.4	0.8	1.2	3	1.7	0	0	1.8	1.3	1.4	0.5	0.7	1.3	1.1	1.2	4.6	0	1.3	1.3
3 Axle Vehicles	0	1	0	0	1	0	0	0	0	0	1	1	0	0	2	0	1	0	0	1	4
% 3 Axle Vehicles	0	0.1	0	0	0.1	0	0	0	0	0	0.3	0.1	0	0	0.1	0	0.1	0	0	0	0
4+ Axle Trucks	0	1	0	0	1	1	0	0	0	1	0	1	0	0	1	0	0	0	0	0	3
% 4+ Axle Trucks																					

	Vineyard Avenue Southbound					Foothill Boulevard Westbound					Vineyard Avenue Northbound					Foothill Boulevard Eastbound					
Start Time	Left	Thru	Right	RoR	App. Total	Left	Thru	Right	RoR	App. Total	Left	Thru	Right	RoR	App. Total	Left	Thru	Right	RoR	App. Total	Int. Total
Peak Hour Analysis From 04:00 PM to 05:45 PM - Peak 1 of 1																					
Peak Hour for Entire Intersection Begins at 04:30 PM																					
04:30 PM	**49**	143	**41**	14	247	**59**	133	30	**12**	234	**49**	181	28	28	**286**	154	237	7	14	412	1179
04:45 PM	39	144	39	13	235	42	122	18	3	185	24	184	**30**	12	250	**174**	234	13	15	436	1106
05:00 PM	45	122	22	15	204	45	130	23	6	204	32	170	22	18	242	156	267	12	17	452	1102
05:15 PM	46	**148**	36	**20**	**250**	55	**154**	**34**	6	**249**	32	**194**	11	**30**	267	160	**314**	**21**	**26**	**521**	**1287**
Total Volume	179	557	138	62	936	201	539	105	27	872	137	729	91	88	1045	644	1052	53	72	1821	4674
% App. Total	19.1	59.5	14.7	6.6		23.1	61.8	12	3.1		13.1	69.8	8.7	8.4		35.4	57.8	2.9	4		
PHF	.913	.941	.841	.775	.936	.852	.875	.772	.563	.876	.699	.939	.758	.733	.913	.925	.838	.631	.692	.874	.908

Counts Unlimited Inc.
25286 Jaclyn Avenue
Moreno Valley, CA 92557
951-485-7934

City of Rancho Cucamonga
N/S: Vineyard Avenue
E/W: Foothill Boulevard
Weather: Sunny

File Name : RNCVIFOPM
Site Code : 9150093
Start Date : 5/27/2009
Page No : 2

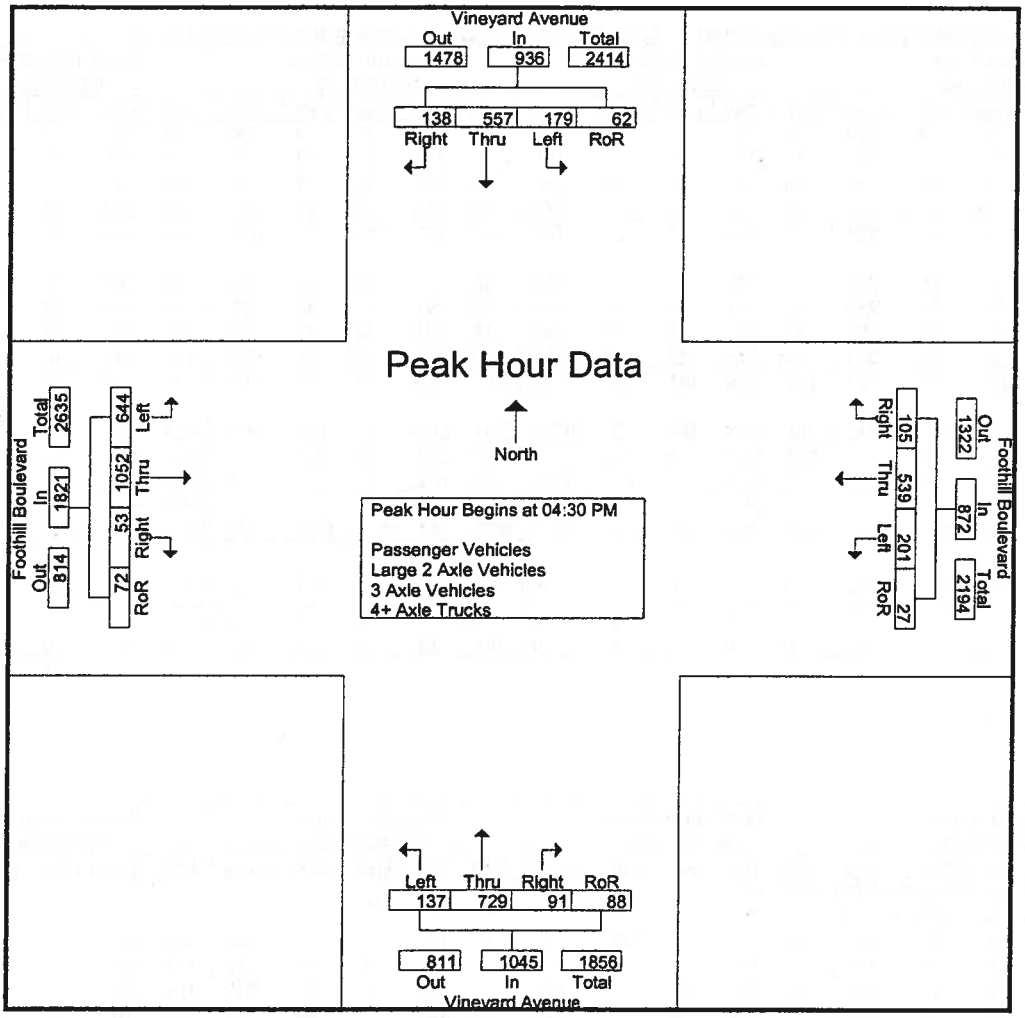

Peak Hour Analysis From 04:00 PM to 05:45 PM - Peak 1 of 1

Peak Hour for Each Approach Begins at:

	04:30 PM					04:30 PM					04:00 PM					04:30 PM				
+0 mins.	**49**	143	**41**	14	247	**59**	133	30	**12**	234	30	**230**	17	4	281	154	237	7	14	412
+15 mins.	39	144	39	13	235	42	122	18	3	185	39	192	**30**	13	274	**174**	234	13	15	436
+30 mins.	45	122	22	15	204	45	130	23	6	204	**49**	181	28	**28**	**286**	156	267	12	17	452
+45 mins.	46	**148**	36	**20**	**250**	55	**154**	**34**	6	**249**	24	184	30	12	250	160	**314**	**21**	**26**	**521**
Total Volume	179	557	138	62	936	201	539	105	27	872	142	787	105	57	1091	644	1052	53	72	1821
% App. Total	19.1	59.5	14.7	6.6		23.1	61.8	12	3.1		13	72.1	9.6	5.2		35.4	57.8	2.9	4	
PHF	.913	.941	.841	.775	.936	.852	.875	.772	.563	.876	.724	.855	.875	.509	.954	.925	.838	.631	.692	.874

Counts Unlimited Inc.
25286 Jaclyn Avenue
Moreno Valley, CA 92557
951-485-7934

City of Rancho Cucamonga
N/S: Vineyard Avenue
E/W: Foothill Boulevard
Weather: Sunny

File Name : RNCVIFOPM
Site Code : 9150093
Start Date : 5/27/2009
Page No : 1

Groups Printed- Passenger Vehicles

	Vineyard Avenue Southbound					Foothill Boulevard Westbound					Vineyard Avenue Northbound					Foothill Boulevard Eastbound					
Start Time	Left	Thru	Right	RoR	App. Total	Left	Thru	Right	RoR	App. Total	Left	Thru	Right	RoR	App. Total	Left	Thru	Right	RoR	App. Total	Int. Total
04:00 PM	24	76	18	8	126	25	126	8	3	162	29	227	17	4	277	114	189	5	10	318	883
04:15 PM	37	136	16	20	209	47	115	23	7	192	39	191	29	12	271	117	239	18	13	387	1059
04:30 PM	49	140	41	14	244	56	131	30	12	229	49	175	28	28	280	151	235	6	14	406	1159
04:45 PM	39	142	39	13	233	41	120	18	3	182	23	182	30	12	247	172	231	12	15	430	1092
Total	149	494	114	55	812	169	492	79	25	765	140	775	104	56	1075	554	894	41	52	1541	4193
05:00 PM	44	121	22	15	202	41	128	23	6	198	32	167	22	18	239	154	263	12	17	446	1085
05:15 PM	45	144	36	20	245	53	153	34	6	246	32	191	11	30	264	159	312	20	26	517	1272
05:30 PM	46	103	36	10	195	40	125	18	9	192	53	190	20	16	279	131	237	17	16	401	1067
05:45 PM	47	133	34	26	240	46	114	26	9	195	39	209	24	16	288	127	241	14	9	391	1114
Total	182	501	128	71	882	180	520	101	30	831	156	757	77	80	1070	571	1053	63	68	1755	4538
Grand Total	331	995	242	126	1694	349	1012	180	55	1596	296	1532	181	136	2145	1125	1947	104	120	3296	8731
Apprch %	19.5	58.7	14.3	7.4		21.9	63.4	11.3	3.4		13.8	71.4	8.4	6.3		34.1	59.1	3.2	3.6		
Total %	3.8	11.4	2.8	1.4	19.4	4	11.6	2.1	0.6	18.3	3.4	17.5	2.1	1.6	24.6	12.9	22.3	1.2	1.4	37.8	

	Vineyard Avenue Southbound					Foothill Boulevard Westbound					Vineyard Avenue Northbound					Foothill Boulevard Eastbound					
Start Time	Left	Thru	Right	RoR	App. Total		Thru	Right	RoR	App. Total		Thru	Right	RoR	App. Total		Thru	Right	RoR	App. Total	Int. Total
Peak Hour Analysis From 04:30 PM to 05:15 PM - Peak 1 of 1																					
Peak Hour for Entire Intersection Begins at 04:30 PM																					
04:30 PM	49	140	41	14	244	56	131	30	12	229	49	175	28	28	280	151	235	6	14	406	1159
04:45 PM	39	142	39	13	233	41	120	18	3	182	23	182	30	12	247	172	231	12	15	430	1092
05:00 PM	44	121	22	15	202	41	128	23	6	198	32	167	22	18	239	154	263	12	17	446	1085
05:15 PM	45	144	36	20	245	53	153	34	6	246	32	191	11	30	264	159	312	20	26	517	1272
Total Volume	177	547	138	62	924	191	532	105	27	855	136	715	91	88	1030	636	1041	50	72	1799	4608
% App. Total	19.2	59.2	14.9	6.7		22.3	62.2	12.3	3.2		13.2	69.4	8.8	8.5		35.4	57.9	2.8	4		
PHF	.903	.950	.841	.775	.943	.853	.869	.772	.563	.869	.694	.936	.758	.733	.920	.924	.834	.625	.692	.870	.906

Counts Unlimited Inc.
25286 Jaclyn Avenue
Moreno Valley, CA 92557
951-485-7934

City of Rancho Cucamonga
N/S: Vineyard Avenue
E/W: Foothill Boulevard
Weather: Sunny

File Name : RNCVIFOPM
Site Code : 9150093
Start Date : 5/27/2009
Page No : 2

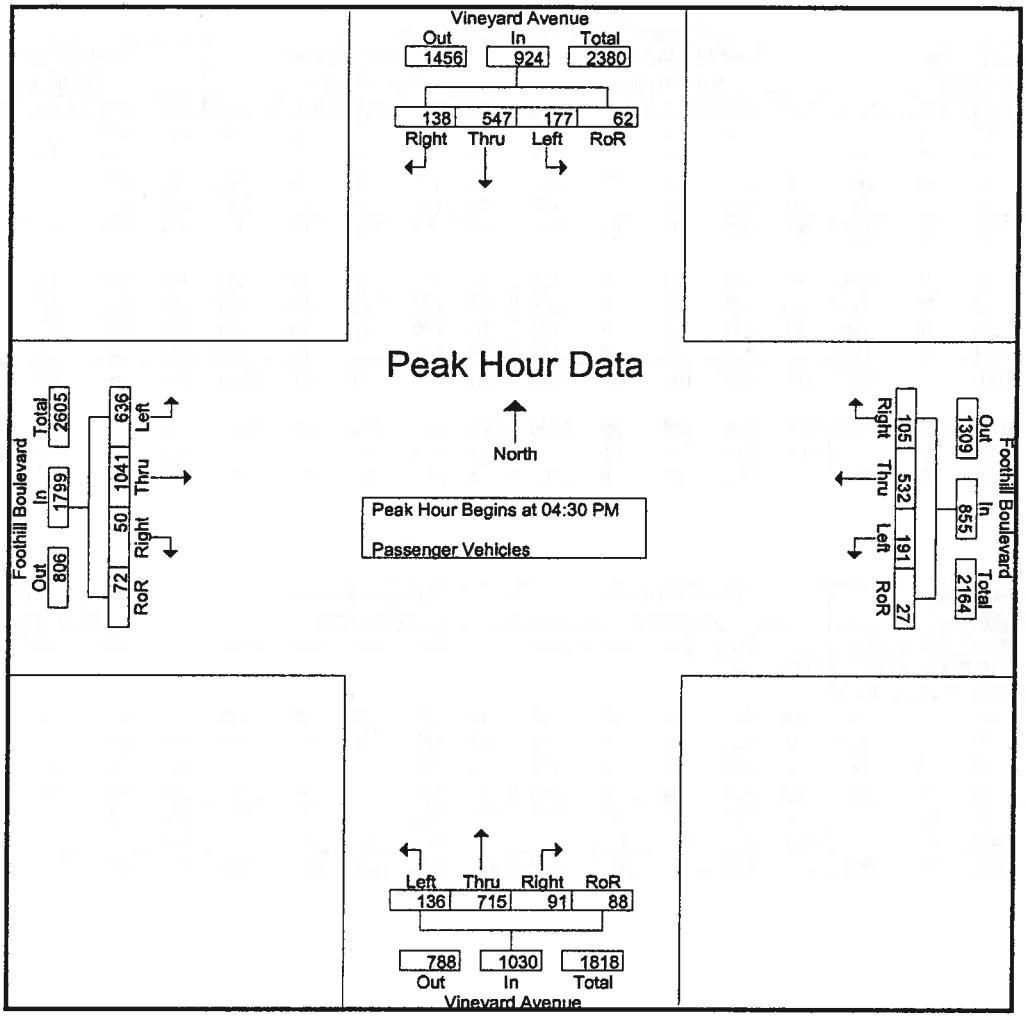

Peak Hour Analysis From 04:30 PM to 05:15 PM - Peak 1 of 1

Peak Hour for Each Approach Begins at:

	04:30 PM					04:30 PM					04:30 PM					04:30 PM				
+0 mins.	**49**	140	**41**	14	244	**56**	131	30	**12**	229	**49**	175	28	28	**280**	151	235	6	14	406
+15 mins.	39	142	39	13	233	41	120	18	3	182	23	182	**30**	12	247	**172**	231	12	15	430
+30 mins.	44	121	22	15	202	41	128	23	6	198	32	167	22	18	239	154	263	12	17	446
+45 mins.	45	**144**	36	**20**	**245**	53	**153**	**34**	6	**246**	32	**191**	11	**30**	264	159	**312**	**20**	**26**	**517**
Total Volume	177	547	138	62	924	191	532	105	27	855	136	715	91	88	1030	636	1041	50	72	1799
% App. Total	19.2	59.2	14.9	6.7		22.3	62.2	12.3	3.2		13.2	69.4	8.8	8.5		35.4	57.9	2.8	4	
PHF	.903	.950	.841	.775	.943	.853	.869	.772	.563	.869	.694	.936	.758	.733	.920	.924	.834	.625	.692	.870

Counts Unlimited Inc.
25286 Jaclyn Avenue
Moreno Valley, CA 92557
951-485-7934

City of Rancho Cucamonga
N/S: Vineyard Avenue
E/W: Foothill Boulevard
Weather: Sunny

File Name : RNCVIFOPM
Site Code : 9150093
Start Date : 5/27/2009
Page No : 1

Groups Printed- Large 2 Axle Vehicles

	Vineyard Avenue Southbound					Foothill Boulevard Westbound					Vineyard Avenue Northbound					Foothill Boulevard Eastbound					
Start Time	Left	Thru	Right	RoR	App. Total	Left	Thru	Right	RoR	App. Total	Left	Thru	Right	RoR	App. Total	Left	Thru	Right	RoR	App. Total	Int. Total
04:00 PM	0	0	0	0	0	0	5	0	0	5	1	2	0	0	3	1	2	0	0	3	11
04:15 PM	0	6	0	1	7	0	3	0	0	3	0	1	1	1	3	2	3	0	0	5	18
04:30 PM	0	3	0	0	3	2	2	0	0	4	0	5	0	0	5	3	2	1	0	6	18
04:45 PM	0	1	0	0	1	1	2	0	0	3	1	2	0	0	3	2	3	1	0	6	13
Total	0	10	0	1	11	3	12	0	0	15	2	10	1	1	14	8	10	2	0	20	60
05:00 PM	1	1	0	0	2	4	2	0	0	6	0	3	0	0	3	2	4	0	0	6	17
05:15 PM	1	4	0	0	5	2	1	0	0	3	0	3	0	0	3	1	2	1	0	4	15
05:30 PM	0	1	0	0	1	2	2	0	0	4	2	4	0	0	6	1	4	0	0	5	16
05:45 PM	0	0	1	0	1	0	1	0	0	1	0	2	0	0	2	1	4	2	0	7	11
Total	2	6	1	0	9	8	6	0	0	14	2	12	0	0	14	5	14	3	0	22	59
Grand Total	2	16	1	1	20	11	18	0	0	29	4	22	1	1	28	13	24	5	0	42	119
Apprch %	10	80	5	5		37.9	62.1	0	0		14.3	78.6	3.6	3.6		31	57.1	11.9	0		
Total %	1.7	13.4	0.8	0.8	16.8	9.2	15.1	0	0	24.4	3.4	18.5	0.8	0.8	23.5	10.9	20.2	4.2	0	35.3	

	Vineyard Avenue Southbound					Foothill Boulevard Westbound					Vineyard Avenue Northbound					Foothill Boulevard Eastbound					
Start Time	Left	Thru	Right	RoR	App. Total		Thru	Right	RoR	App. Total		Thru	Right	RoR	App. Total		Thru	Right	RoR	App. Total	Int. Total
Peak Hour Analysis From 04:30 PM to 05:15 PM - Peak 1 of 1																					
Peak Hour for Entire Intersection Begins at 04:30 PM																					
04:30 PM	0	3	0	0	3	2	2	0	0	4	0	5	0	0	5	3	2	1	0	6	18
04:45 PM	0	1	0	0	1	1	2	0	0	3	1	2	0	0	3	2	3	1	0	6	13
05:00 PM	1	1	0	0	2	4	2	0	0	6	0	3	0	0	3	2	4	0	0	6	17
05:15 PM	1	4	0	0	5	2	1	0	0	3	0	3	0	0	3	1	2	1	0	4	15
Total Volume	2	9	0	0	11	9	7	0	0	16	1	13	0	0	14	8	11	3	0	22	63
% App. Total	18.2	81.8	0	0		56.2	43.8	0	0		7.1	92.9	0	0		36.4	50	13.6	0		
PHF	.500	.563	.000	.000	.550	.563	.875	.000	.000	.667	.250	.650	.000	.000	.700	.667	.688	.750	.000	.917	.875

Counts Unlimited Inc.
25286 Jaclyn Avenue
Moreno Valley, CA 92557
951-485-7934

City of Rancho Cucamonga
N/S: Vineyard Avenue
E/W: Foothill Boulevard
Weather: Sunny

File Name : RNCVIFOPM
Site Code : 9150093
Start Date : 5/27/2009
Page No : 2

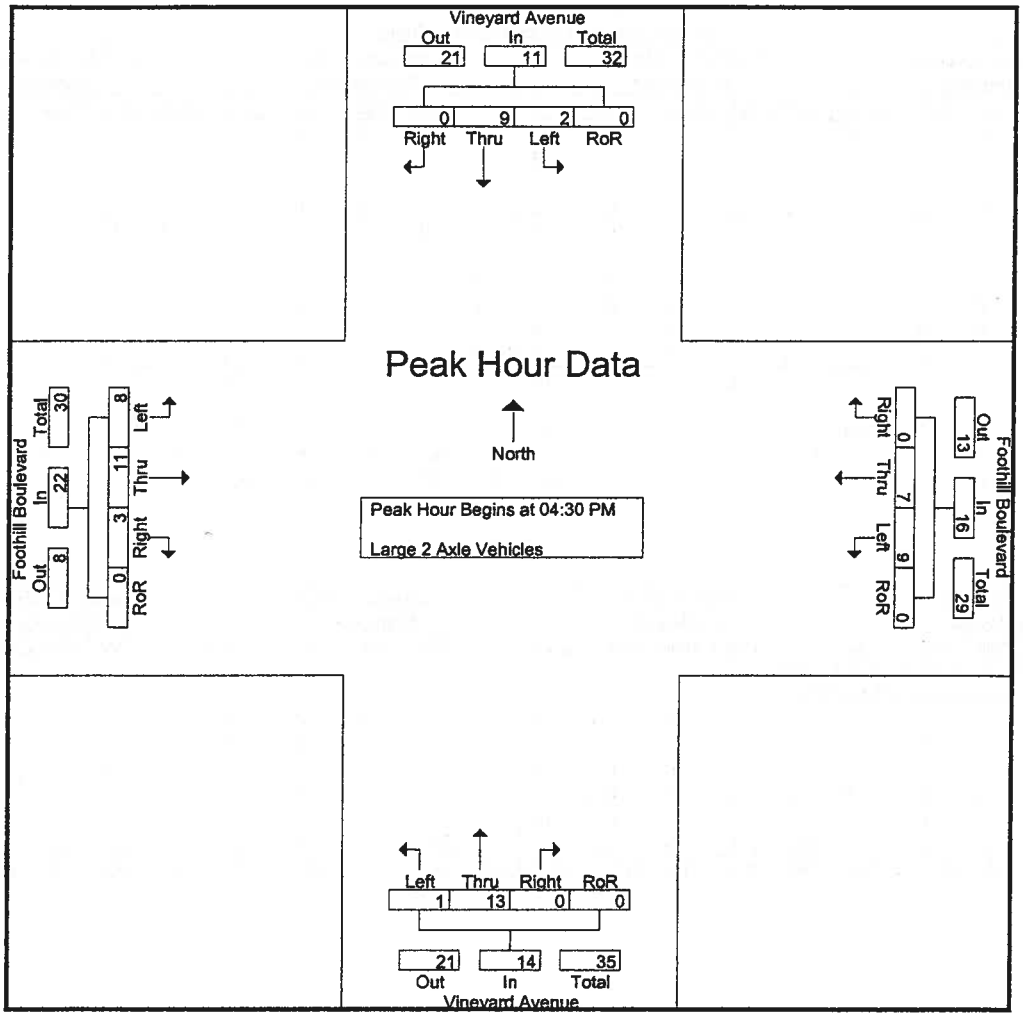

Peak Hour Analysis From 04:30 PM to 05:15 PM - Peak 1 of 1

Peak Hour for Each Approach Begins at:

	04:30 PM					04:30 PM					04:30 PM					04:30 PM				
+0 mins.	0	3	0	0	3	2	2	0	0	4	0	5	0	0	5	3	2	1	0	6
+15 mins.	0	1	0	0	1	1	2	0	0	3	1	2	0	0	3	2	3	1	0	6
+30 mins.	1	1	0	0	2	4	2	0	0	6	0	3	0	0	3	2	4	0	0	6
+45 mins.	1	4	0	0	5	2	1	0	0	3	0	3	0	0	3	1	2	1	0	4
Total Volume	2	9	0	0	11	9	7	0	0	16	1	13	0	0	14	8	11	3	0	22
% App. Total	18.2	81.8	0	0		56.2	43.8	0	0		7.1	92.9	0	0		36.4	50	13.6	0	
PHF	.500	.563	.000	.000	.550	.563	.875	.000	.000	.667	.250	.650	.000	.000	.700	.667	.688	.750	.000	.917

Counts Unlimited Inc.
25286 Jaclyn Avenue
Moreno Valley, CA 92557
951-485-7934

City of Rancho Cucamonga
N/S: Vineyard Avenue
E/W: Foothill Boulevard
Weather: Sunny

File Name : RNCVIFOPM
Site Code : 9150093
Start Date : 5/27/2009
Page No : 1

Groups Printed- 3 Axle Vehicles

	Vineyard Avenue Southbound					Foothill Boulevard Westbound					Vineyard Avenue Northbound					Foothill Boulevard Eastbound					
Start Time	Left	Thru	Right	RoR	App. Total	Left	Thru	Right	RoR	App. Total	Left	Thru	Right	RoR	App. Total	Left	Thru	Right	RoR	App. Total	Int. Total
04:00 PM	0	1	0	0	1	0	0	0	0	0	0	1	0	0	1	0	0	0	0	0	2
04:15 PM	0	0	0	0	0	0	0	0	0	0	0	0	0	0	0	0	1	0	0	1	1
04:30 PM	0	0	0	0	0	0	0	0	0	0	0	0	0	0	0	0	0	0	0	0	0
04:45 PM	0	0	0	0	0	0	0	0	0	0	0	0	0	0	0	0	0	0	0	0	0
Total	0	1	0	0	1	0	0	0	0	0	0	1	0	0	1	0	1	0	0	1	3
05:00 PM	0	0	0	0	0	0	0	0	0	0	0	0	0	0	0	0	0	0	0	0	0
05:15 PM	0	0	0	0	0	0	0	0	0	0	0	0	0	0	0	0	0	0	0	0	0
05:30 PM	0	0	0	0	0	0	0	0	0	0	0	0	0	0	0	0	0	0	0	0	0
05:45 PM	0	0	0	0	0	0	0	0	0	0	1	0	0	0	1	0	0	0	0	0	1
Total	0	0	0	0	0	0	0	0	0	0	1	0	0	0	1	0	0	0	0	0	1
Grand Total	0	1	0	0	1	0	0	0	0	0	1	1	0	0	2	0	1	0	0	1	4
Apprch %	0	100	0	0		0	0	0	0		50	50	0	0		0	100	0	0		
Total %	0	25	0	0	25	0	0	0	0	0	25	25	0	0	50	0	25	0	0	25	

	Vineyard Avenue Southbound					Foothill Boulevard Westbound					Vineyard Avenue Northbound					Foothill Boulevard Eastbound					
Start Time	Left	Thru	Right	RoR	App. Total	Left	Thru	Right	RoR	App. Total	Left	Thru	Right	RoR	App. Total	Left	Thru	Right	RoR	App. Total	Int. Total
Peak Hour Analysis From 04:30 PM to 05:15 PM - Peak 1 of 1																					
Peak Hour for Entire Intersection Begins at 04:30 PM																					
04:30 PM	0	0	0	0	0	0	0	0	0	0	0	0	0	0	0	0	0	0	0	0	0
04:45 PM	0	0	0	0	0	0	0	0	0	0	0	0	0	0	0	0	0	0	0	0	0
05:00 PM	0	0	0	0	0	0	0	0	0	0	0	0	0	0	0	0	0	0	0	0	0
05:15 PM	0	0	0	0	0	0	0	0	0	0	0	0	0	0	0	0	0	0	0	0	0
Total Volume	0	0	0	0	0	0	0	0	0	0	0	0	0	0	0	0	0	0	0	0	0
% App. Total	0	0	0	0		0	0	0	0		0	0	0	0		0	0	0	0		
PHF	.000	.000	.000	.000	.000	.000	.000	.000	.000	.000	.000	.000	.000	.000	.000	.000	.000	.000	.000	.000	.000

Counts Unlimited Inc.
25286 Jaclyn Avenue
Moreno Valley, CA 92557
951-485-7934

City of Rancho Cucamonga
N/S: Vineyard Avenue
E/W: Foothill Boulevard
Weather: Sunny

File Name : RNCVIFOPM
Site Code : 9150093
Start Date : 5/27/2009
Page No : 2

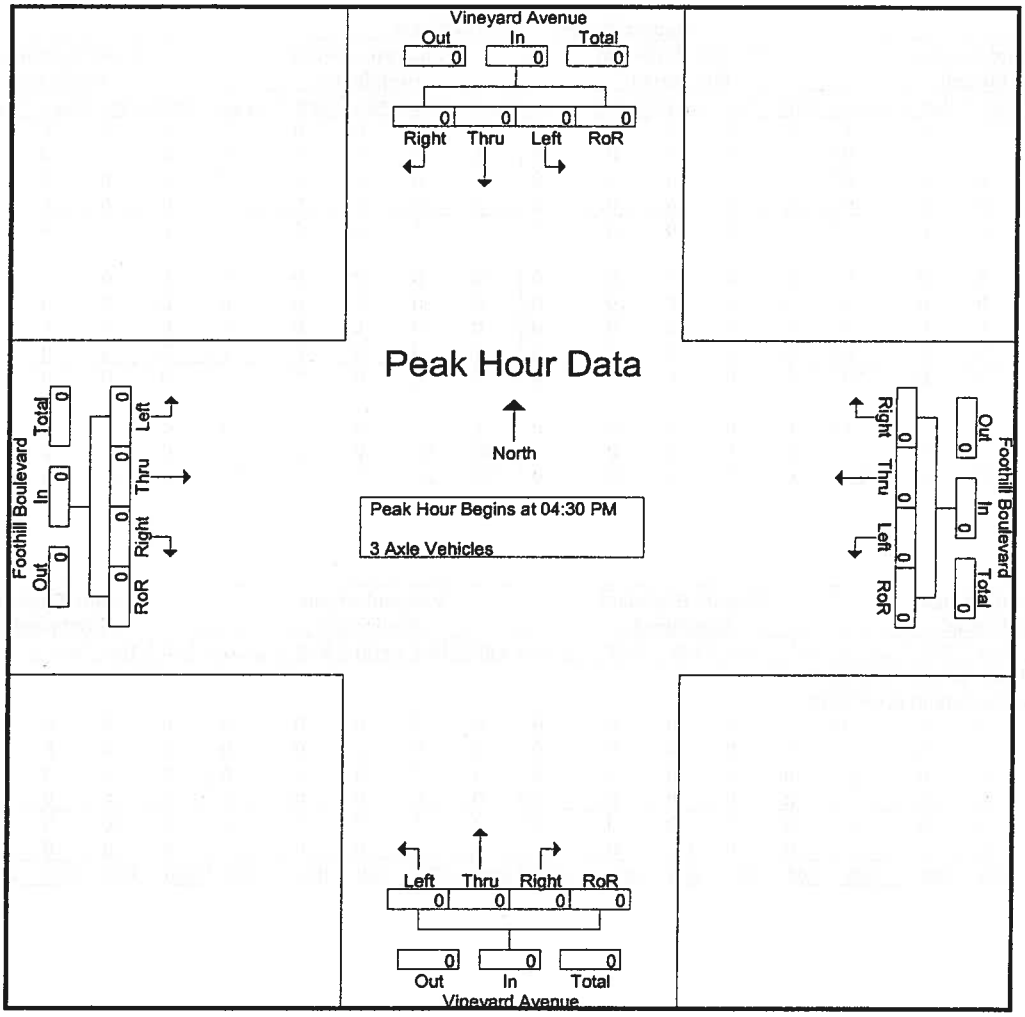

Peak Hour Analysis From 04:30 PM to 05:15 PM - Peak 1 of 1

Peak Hour for Each Approach Begins at:

	04:30 PM					04:30 PM					04:30 PM					04:30 PM				
+0 mins.	0	0	0	0	0	0	0	0	0	0	0	0	0	0	0	0	0	0	0	0
+15 mins.	0	0	0	0	0	0	0	0	0	0	0	0	0	0	0	0	0	0	0	0
+30 mins.	0	0	0	0	0	0	0	0	0	0	0	0	0	0	0	0	0	0	0	0
+45 mins.	0	0	0	0	0	0	0	0	0	0	0	0	0	0	0	0	0	0	0	0
Total Volume	0	0	0	0	0	0	0	0	0	0	0	0	0	0	0	0	0	0	0	0
% App. Total	0	0	0	0		0	0	0	0		0	0	0	0		0	0	0	0	
PHF	.000	.000	.000	.000	.000	.000	.000	.000	.000	.000	.000	.000	.000	.000	.000	.000	.000	.000	.000	.000

Counts Unlimited Inc.
25286 Jaclyn Avenue
Moreno Valley, CA 92557
951-485-7934

City of Rancho Cucamonga
N/S: Vineyard Avenue
E/W: Foothill Boulevard
Weather: Sunny

File Name : RNCVIFOPM
Site Code : 9150093
Start Date : 5/27/2009
Page No : 1

Groups Printed- 4+ Axle Trucks

	Vineyard Avenue Southbound					Foothill Boulevard Westbound					Vineyard Avenue Northbound					Foothill Boulevard Eastbound					
Start Time	Left	Thru	Right	RoR	App. Total	Left	Thru	Right	RoR	App. Total	Left	Thru	Right	RoR	App. Total	Left	Thru	Right	RoR	App. Total	Int. Total
04:00 PM	0	0	0	0	0	0	0	0	0	0	0	0	0	0	0	0	0	0	0	0	0
04:15 PM	0	0	0	0	0	0	0	0	0	0	0	0	0	0	0	0	0	0	0	0	0
04:30 PM	0	0	0	0	0	1	0	0	0	1	0	1	0	0	1	0	0	0	0	0	2
04:45 PM	0	1	0	0	1	0	0	0	0	0	0	0	0	0	0	0	0	0	0	0	1
Total	0	1	0	0	1	1	0	0	0	1	0	1	0	0	1	0	0	0	0	0	3
05:00 PM	0	0	0	0	0	0	0	0	0	0	0	0	0	0	0	0	0	0	0	0	0
05:15 PM	0	0	0	0	0	0	0	0	0	0	0	0	0	0	0	0	0	0	0	0	0
05:30 PM	0	0	0	0	0	0	0	0	0	0	0	0	0	0	0	0	0	0	0	0	0
05:45 PM	0	0	0	0	0	0	0	0	0	0	0	0	0	0	0	0	0	0	0	0	0
Total	0	0	0	0	0	0	0	0	0	0	0	0	0	0	0	0	0	0	0	0	0
Grand Total	0	1	0	0	1	1	0	0	0	1	0	1	0	0	1	0	0	0	0	0	3
Apprch %	0	100	0	0		100	0	0	0		0	100	0	0		0	0	0	0		
Total %	0	33.3	0	0	33.3	33.3	0	0	0	33.3	0	33.3	0	0	33.3	0	0	0	0	0	

	Vineyard Avenue Southbound					Foothill Boulevard Westbound					Vineyard Avenue Northbound					Foothill Boulevard Eastbound					
Start Time	Left	Thru	Right	RoR	App. Total		Thru	Right	RoR	App. Total		Thru	Right	RoR	App. Total		Thru	Right	RoR	App. Total	Int. Total
Peak Hour Analysis From 04:30 PM to 05:15 PM - Peak 1 of 1																					
Peak Hour for Entire Intersection Begins at 04:30 PM																					
04:30 PM	0	0	0	0	0	1	0	0	0	1	0	1	0	0	1	0	0	0	0	0	2
04:45 PM	0	1	0	0	1	0	0	0	0	0	0	0	0	0	0	0	0	0	0	0	1
05:00 PM	0	0	0	0	0	0	0	0	0	0	0	0	0	0	0	0	0	0	0	0	0
05:15 PM	0	0	0	0	0	0	0	0	0	0	0	0	0	0	0	0	0	0	0	0	0
Total Volume	0	1	0	0	1	1	0	0	0	1	0	1	0	0	1	0	0	0	0	0	3
% App. Total	0	100	0	0		100	0	0	0		0	100	0	0		0	0	0	0		
PHF	.000	.250	.000	.000	.250	.250	.000	.000	.000	.250	.000	.250	.000	.000	.250	.000	.000	.000	.000	.000	.375

Counts Unlimited Inc.
25286 Jaclyn Avenue
Moreno Valley, CA 92557
951-485-7934

City of Rancho Cucamonga
N/S: Vineyard Avenue
E/W: Foothill Boulevard
Weather: Sunny

File Name : RNCVIFOPM
Site Code : 9150093
Start Date : 5/27/2009
Page No : 2

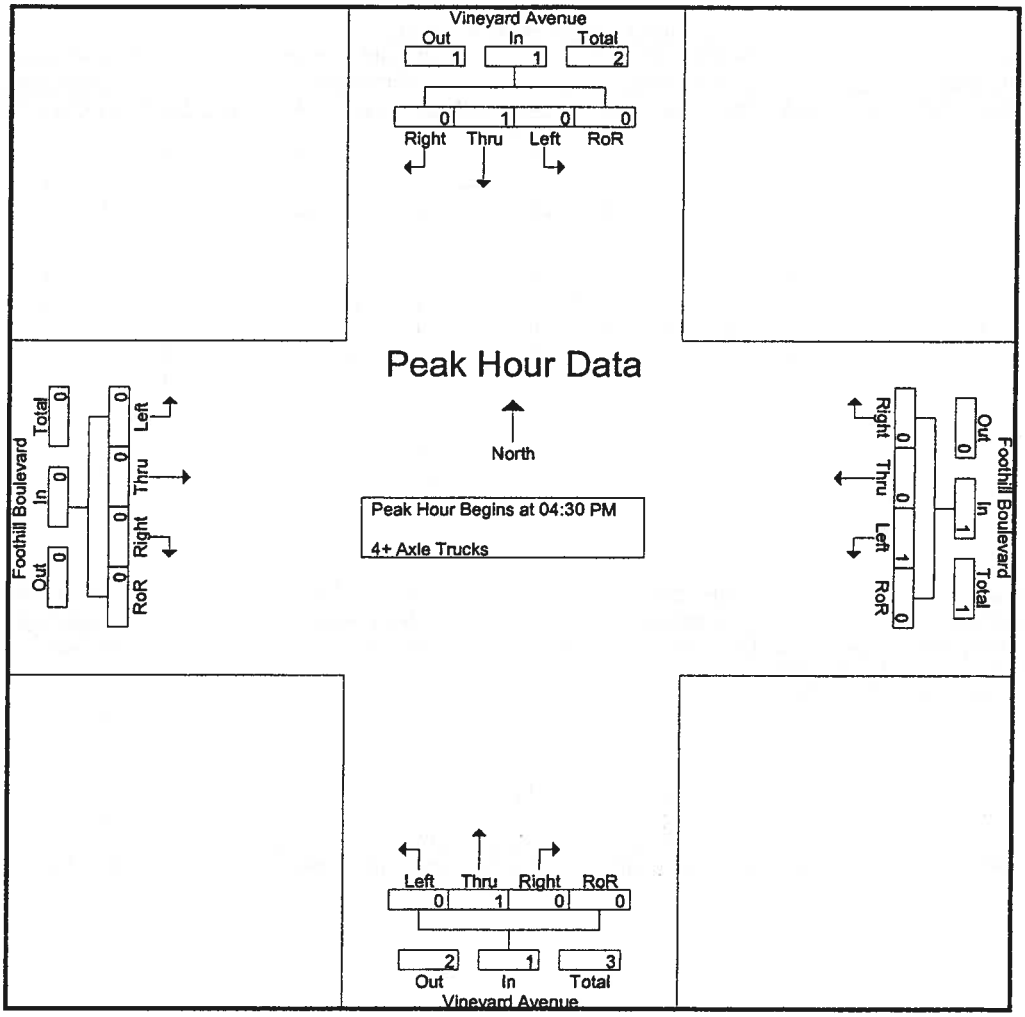

Peak Hour Analysis From 04:30 PM to 05:15 PM - Peak 1 of 1

Peak Hour for Each Approach Begins at:

	04:30 PM					04:30 PM					04:30 PM					04:30 PM				
+0 mins.	0	0	0	0	0	1	0	0	0	1	0	1	0	0	1	0	0	0	0	0
+15 mins.	0	1	0	0	1	0	0	0	0	0	0	0	0	0	0	0	0	0	0	0
+30 mins.	0	0	0	0	0	0	0	0	0	0	0	0	0	0	0	0	0	0	0	0
+45 mins.	0	0	0	0	0	0	0	0	0	0	0	0	0	0	0	0	0	0	0	0
Total Volume	0	1	0	0	1	1	0	0	0	1	0	1	0	0	1	0	0	0	0	0
% App. Total	0	100	0	0		100	0	0	0		0	100	0	0		0	0	0	0	
PHF	.000	.250	.000	.000	.250	.250	.000	.000	.000	.250	.000	.250	.000	.000	.250	.000	.000	.000	.000	.000

PASSENGER CAR EQUIVALENCY PEAK HOUR COUNT SUMMARY

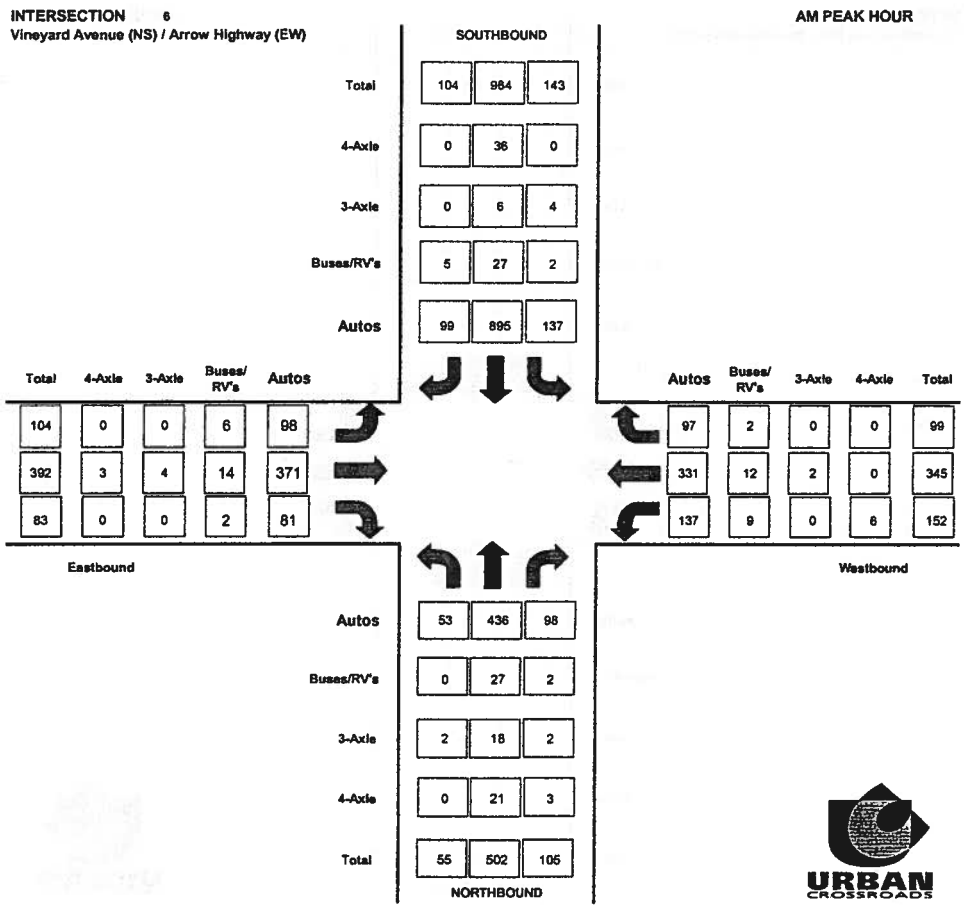

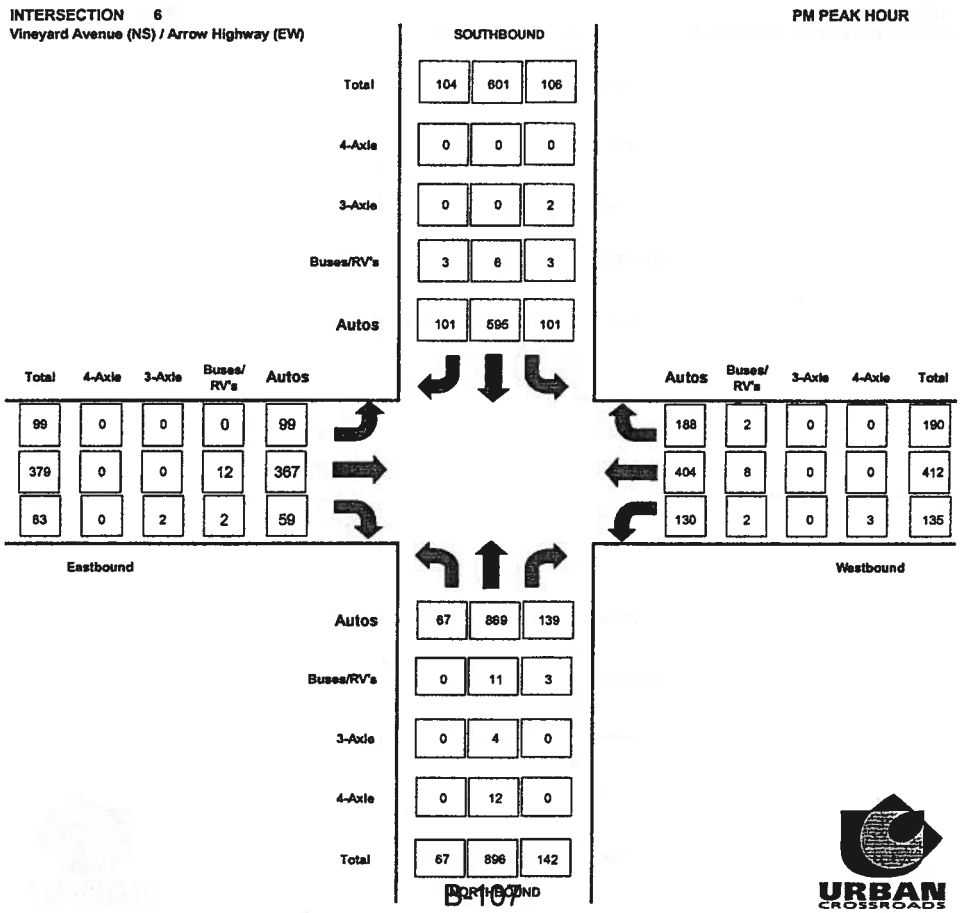

RAW PEAK HOUR COUNT SUMMARY

INTERSECTION 6
Vineyard Avenue (NS) / Arrow Highway (EW)

AM PEAK HOUR

SOUTHBOUND

Total	102	928	140
4-Axle	0	12	0
3-Axle	0	3	2
Buses/RV's	3	18	1
Autos	99	895	137

Total	4-Axle	3-Axle	Buses/ RV's	Autos
102	0	0	4	98
383	1	2	9	371
82	0	0	1	81

Eastbound

Autos	Buses/ RV's	3-Axle	4-Axle	Total
97	1	0	0	98
331	6	1	0	340
137	6	0	2	145

Westbound

Autos	53	436	98
Buses/RV's	0	18	1
3-Axle	1	9	1
4-Axle	0	7	1
Total	54	470	101

NORTHBOUND

URBAN CROSSROADS

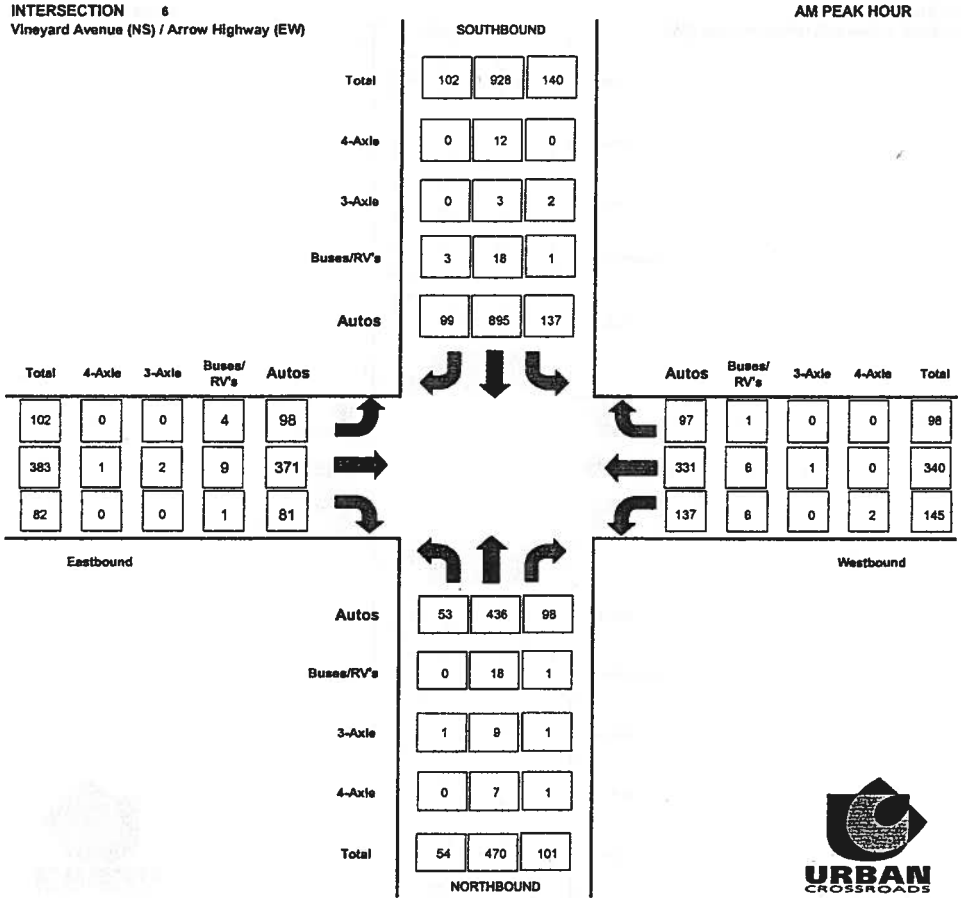

INTERSECTION 6
Vineyard Avenue (NS) / Arrow Highway (EW)

PM PEAK HOUR

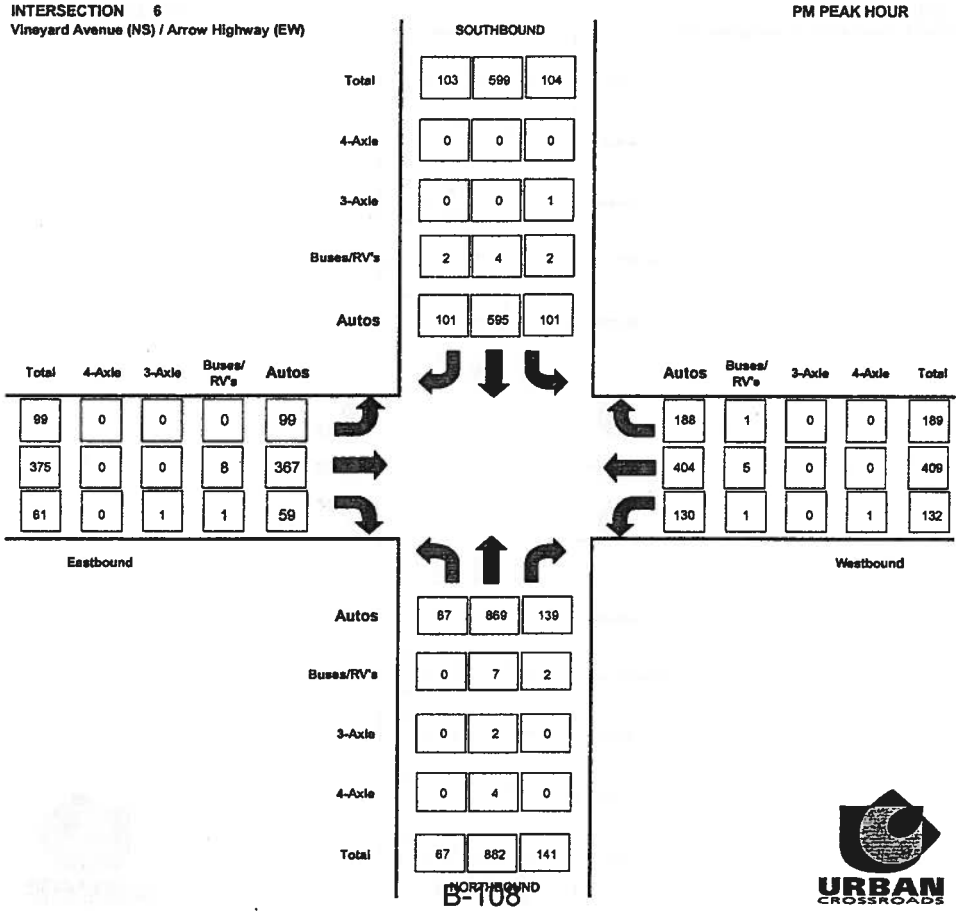

SOUTHBOUND

Total	103	599	104
4-Axle	0	0	0
3-Axle	0	0	1
Buses/RV's	2	4	2
Autos	101	595	101

Total	4-Axle	3-Axle	Buses/ RV's	Autos
99	0	0	0	99
375	0	0	8	367
61	0	1	1	59

Eastbound

Autos	Buses/ RV's	3-Axle	4-Axle	Total
188	1	0	0	189
404	5	0	0	409
130	1	0	1	132

Westbound

Autos	67	869	139
Buses/RV's	0	7	2
3-Axle	0	2	0
4-Axle	0	4	0
Total	67	882	141

NORTHBOUND

URBAN CROSSROADS

Counts Unlimited Inc.
25286 Jaclyn Avenue
Moreno Valley, CA 92557
951-485-7934

City of Rancho Cucamonga
N/S: Vineyard Avenue
E/W: Arrow Route
Weather: Sunny

File Name : RNCVIARAM
Site Code : 9150075
Start Date : 5/28/2009
Page No : 1

Groups Printed- Passenger Vehicles - Large 2 Axle Vehicles - 3 Axle Vehicles - 4+ Axle Trucks

	Vineyard Avenue Southbound					Arrow Route Westbound					Vineyard Avenue Northbound					Arrow Route Eastbound					
Start Time	Left	Thru	Right	RoR	App. Total	Left	Thru	Right	RoR	App. Total	Left	Thru	Right	RoR	App. Total	Left	Thru	Right	RoR	App. Total	Int. Total
07:00 AM	14	179	11	0	204	34	60	9	10	113	21	80	11	4	116	16	42	9	6	73	506
07:15 AM	32	208	14	3	257	43	85	13	13	154	8	139	15	2	164	37	78	8	11	134	709
07:30 AM	29	286	30	2	347	24	69	14	19	126	15	143	18	5	181	36	89	12	15	152	806
07:45 AM	42	234	26	3	305	34	105	10	12	161	21	102	22	5	150	14	112	11	12	149	765
Total	117	907	81	8	1113	135	319	46	54	554	65	464	66	16	611	103	321	40	44	508	2786
08:00 AM	37	200	24	0	261	44	81	9	8	142	10	86	26	8	130	15	104	5	8	132	665
08:15 AM	39	162	20	3	224	44	81	12	9	146	20	104	32	5	161	15	122	12	12	161	692
08:30 AM	36	175	12	2	225	38	85	19	26	168	10	105	22	7	144	12	79	9	9	109	646
08:45 AM	31	117	11	2	161	30	74	11	17	132	14	132	14	2	162	10	63	2	11	86	541
Total	143	654	67	7	871	156	321	51	60	588	54	427	94	22	597	52	368	28	40	488	2544
Grand Total	260	1561	148	15	1984	291	640	97	114	1142	119	891	160	38	1208	155	689	68	84	996	5330
Apprch %	13.1	78.7	7.5	0.8		25.5	56	8.5	10		9.9	73.8	13.2	3.1		15.6	69.2	6.8	8.4		
Total %	4.9	29.3	2.8	0.3	37.2	5.5	12	1.8	2.1	21.4	2.2	16.7	3	0.7	22.7	2.9	12.9	1.3	1.6	18.7	
Passenger Vehicles		1508																			
% Passenger Vehicles	97.7	96.6	95.9	93.3	96.7	93.5	96.9	96.9	99.1	96.2	93.3	94.1	96.9	100	94.5	96.8	96.4	94.1	100	96.6	96.1
Large 2 Axle Vehicles																					
% Large 2 Axle Vehicles	1.5	1.9	4.1	6.7	2.1	3.8	2.5	2.1	0.9	2.6	3.4	3.6	1.2	0	3.1	3.2	2.3	5.9	0	2.5	2.5
3 Axle Vehicles	2	6	0	0	8	2	1	1	0	4	3	14	1	0	18	0	7	0	0	7	37
% 3 Axle Vehicles	0.8	0.4	0	0	0.4	0.7	0.2	1	0	0.4	2.5	1.6	0.6	0	1.5	0	1	0	0	0.7	0.7
4+ Axle Trucks	0	17	0	0	17	6	3	0	0	9	1	7	2	0	10	0	2	0	0	2	38
% 4+ Axle Trucks																					

	Vineyard Avenue Southbound					Arrow Route Westbound					Vineyard Avenue Northbound					Arrow Route Eastbound					
Start Time	Left	Thru	Right	RoR	App. Total	Left	Thru	Right	RoR	App. Total	Left	Thru	Right	RoR	App. Total	Left	Thru	Right	RoR	App. Total	Int. Total
Peak Hour Analysis From 07:00 AM to 08:45 AM - Peak 1 of 1																					
Peak Hour for Entire Intersection Begins at 07:15 AM																					
07:15 AM	32	208	14	**3**	257	43	85	13	13	154	8	139	15	2	164	**37**	78	8	11	134	709
07:30 AM	29	**286**	**30**	2	**347**	24	69	**14**	**19**	126	15	**143**	18	5	**181**	36	89	**12**	**15**	**152**	**806**
07:45 AM	**42**	234	26	3	305	34	**105**	10	12	**161**	**21**	102	22	5	150	14	**112**	11	12	149	765
08:00 AM	37	200	24	0	261	**44**	81	9	8	142	10	86	**26**	**8**	130	15	104	5	8	132	665
Total Volume	140	928	94	8	1170	145	340	46	52	583	54	470	81	20	625	102	383	36	46	567	2945
% App. Total	12	79.3	8	0.7		24.9	58.3	7.9	8.9		8.6	75.2	13	3.2		18	67.5	6.3	8.1		
PHF	.833	.811	.783	.667	.843	.824	.810	.821	.684	.905	.643	.822	.779	.625	.863	.689	.855	.750	.767	.933	.913

Counts Unlimited Inc.
25286 Jaclyn Avenue
Moreno Valley, CA 92557
951-485-7934

City of Rancho Cucamonga
N/S: Vineyard Avenue
E/W: Arrow Route
Weather: Sunny

File Name : RNCVIARAM
Site Code : 9150075
Start Date : 5/28/2009
Page No : 2

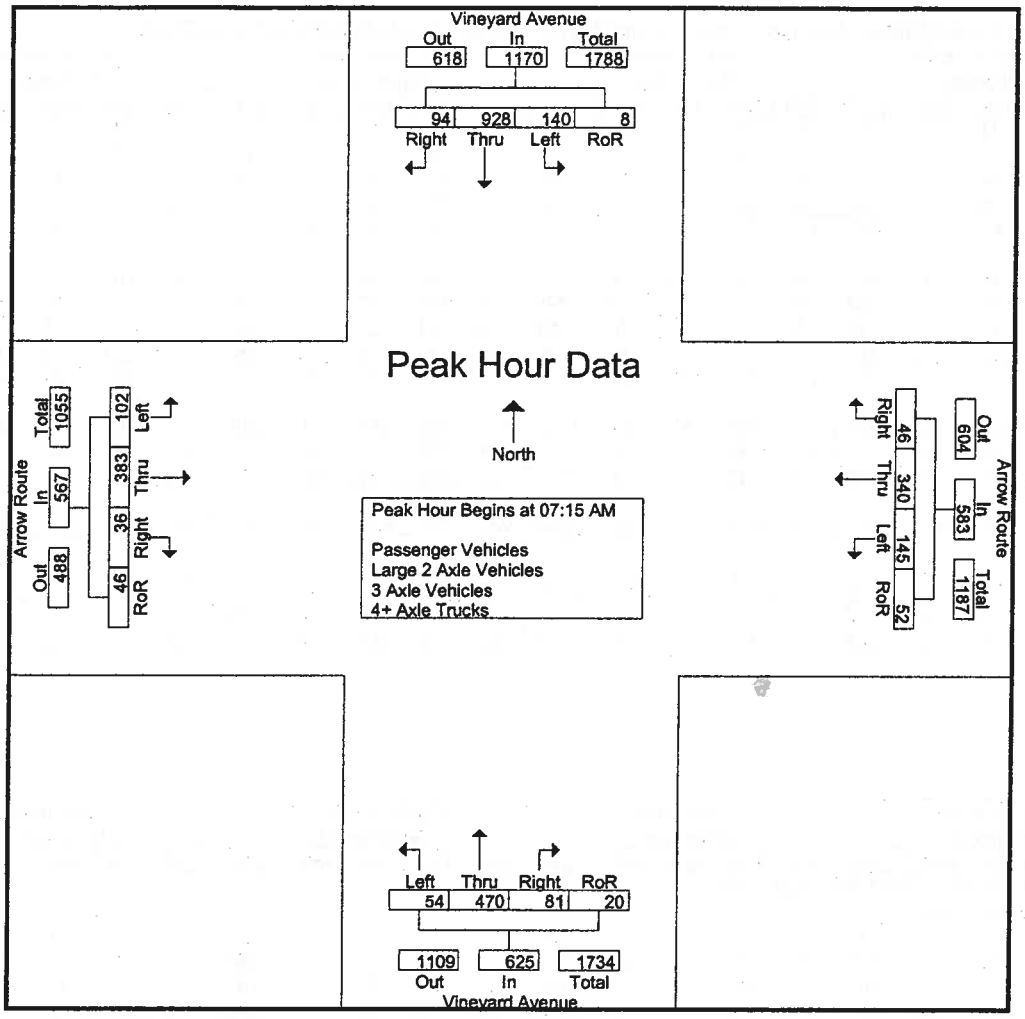

Peak Hour Analysis From 07:00 AM to 08:45 AM - Peak 1 of 1

Peak Hour for Each Approach Begins at:

	07:15 AM					07:45 AM					07:15 AM					07:30 AM				
+0 mins.	32	208	14	3	257	34	**105**	10	12	161	8	139	15	2	164	**36**	89	**12**	**15**	152
+15 mins.	29	**286**	**30**	2	**347**	**44**	81	9	8	142	15	**143**	18	5	**181**	14	112	11	12	149
+30 mins.	**42**	234	26	3	305	44	81	12	9	146	**21**	102	22	5	150	15	104	5	8	132
+45 mins.	37	200	24	0	261	38	85	**19**	**26**	**168**	10	86	**26**	**8**	130	15	**122**	12	12	**161**
Total Volume	140	928	94	8	1170	160	352	50	55	617	54	470	81	20	625	80	427	40	47	594
% App. Total	12	79.3	8	0.7		25.9	57.1	8.1	8.9		8.6	75.2	13	3.2		13.5	71.9	6.7	7.9	
PHF	.833	.811	.783	.667	.843	.909	.838	.658	.529	.918	.643	.822	.779	.625	.863	.556	.875	.833	.783	.922

Counts Unlimited Inc.
25286 Jaclyn Avenue
Moreno Valley, CA 92557
951-485-7934

City of Rancho Cucamonga
N/S: Vineyard Avenue
E/W: Arrow Route
Weather: Sunny

File Name : RNCVIARAM
Site Code : 9150075
Start Date : 5/28/2009
Page No : 1

Groups Printed- Passenger Vehicles

	Vineyard Avenue Southbound					Arrow Route Westbound					Vineyard Avenue Northbound					Arrow Route Eastbound					
Start Time	Left	Thru	Right	RoR	App. Total	Left	Thru	Right	RoR	App. Total	Left	Thru	Right	RoR	App. Total	Left	Thru	Right	RoR	App. Total	Int. Total
07:00 AM	14	174	10	0	198	28	59	8	10	105	19	72	10	4	105	15	37	9	6	67	475
07:15 AM	30	198	14	2	244	40	84	13	12	149	8	127	15	2	152	36	72	8	11	127	672
07:30 AM	29	272	30	2	333	24	66	14	19	123	15	139	15	5	174	35	85	12	15	147	777
07:45 AM	41	230	25	3	299	30	102	10	12	154	20	90	22	5	137	12	110	11	12	145	735
Total	114	874	79	7	1074	122	311	45	53	531	62	428	62	16	568	98	304	40	44	486	2659
08:00 AM	37	195	23	0	255	43	79	9	8	139	10	80	26	8	124	15	104	4	8	131	649
08:15 AM	38	155	18	3	214	44	77	11	9	141	18	99	32	5	154	15	120	11	12	158	667
08:30 AM	34	172	11	2	219	36	82	18	26	162	9	100	21	7	137	12	75	7	9	103	621
08:45 AM	31	112	11	2	156	27	71	11	17	126	12	131	14	2	159	10	61	2	11	84	525
Total	140	634	63	7	844	150	309	49	60	568	49	410	93	22	574	52	360	24	40	476	2462
Grand Total	254	1508	142	14	1918	272	620	94	113	1099	111	838	155	38	1142	150	664	64	84	962	5121
Apprch %	13.2	78.6	7.4	0.7		24.7	56.4	8.6	10.3		9.7	73.4	13.6	3.3		15.6	69	6.7	8.7		
Total %	5	29.4	2.8	0.3	37.5	5.3	12.1	1.8	2.2	21.5	2.2	16.4	3	0.7	22.3	2.9	13	1.2	1.6	18.8	

	Vineyard Avenue Southbound					Arrow Route Westbound					Vineyard Avenue Northbound					Arrow Route Eastbound					
Start Time	Left	Thru	Right	RoR	App. Total		Thru	Right	RoR	App. Total		Thru	Right	RoR	App. Total		Thru	Right	RoR	App. Total	Int. Total
Peak Hour Analysis From 07:15 AM to 08:00 AM - Peak 1 of 1																					
Peak Hour for Entire Intersection Begins at 07:15 AM																					
07:15 AM	30	198	14	2	244	40	84	13	12	149	8	127	15	2	152	36	72	8	11	127	672
07:30 AM	29	272	30	2	333	24	66	14	19	123	15	139	15	5	174	35	85	12	15	147	777
07:45 AM	41	230	25	3	299	30	102	10	12	154	20	90	22	5	137	12	110	11	12	145	735
08:00 AM	37	195	23	0	255	43	79	9	8	139	10	80	26	8	124	15	104	4	8	131	649
Total Volume	137	895	92	7	1131	137	331	46	51	565	53	436	78	20	587	98	371	35	46	550	2833
% App. Total	12.1	79.1	8.1	0.6		24.2	58.6	8.1	9		9	74.3	13.3	3.4		17.8	67.5	6.4	8.4		
PHF	.835	.823	.767	.583	.849	.797	.811	.821	.671	.917	.663	.784	.750	.625	.843	.681	.843	.729	.767	.935	.912

Counts Unlimited Inc.
25286 Jaclyn Avenue
Moreno Valley, CA 92557
951-485-7934

City of Rancho Cucamonga
N/S: Vineyard Avenue
E/W: Arrow Route
Weather: Sunny

File Name : RNCVIARAM
Site Code : 9150075
Start Date : 5/28/2009
Page No : 2

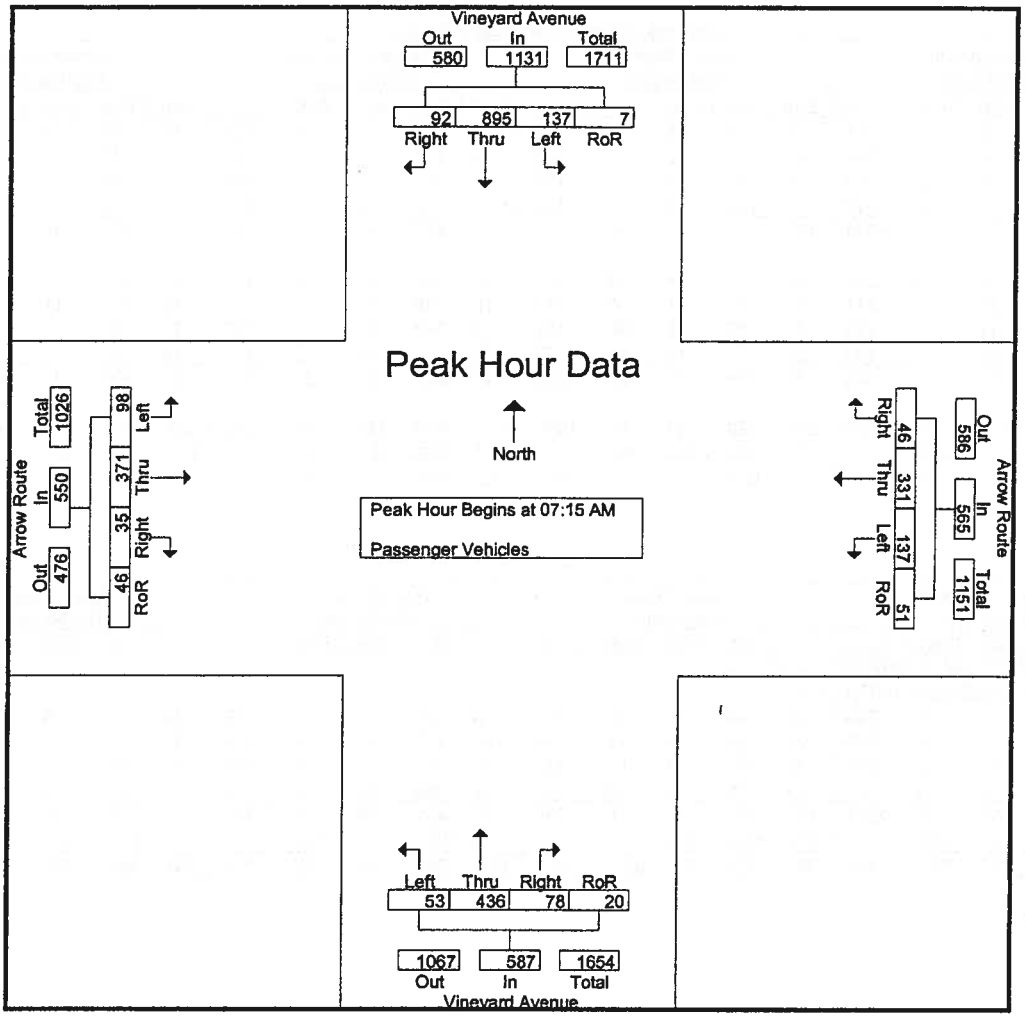

Peak Hour Analysis From 07:15 AM to 08:00 AM - Peak 1 of 1

Peak Hour for Each Approach Begins at:

	07:15 AM					07:15 AM					07:15 AM					07:15 AM				
+0 mins.	30	198	14	2	244	40	84	13	12	149	8	127	15	2	152	36	72	8	11	127
+15 mins.	29	**272**	**30**	2	**333**	24	66	**14**	**19**	123	15	**139**	15	5	**174**	35	85	**12**	**15**	**147**
+30 mins.	**41**	230	25	**3**	299	30	**102**	10	12	**154**	**20**	90	22	5	137	12	**110**	11	12	145
+45 mins.	37	195	23	0	255	**43**	79	9	8	139	10	80	**26**	**8**	124	15	104	4	8	131
Total Volume	137	895	92	7	1131	137	331	46	51	565	53	436	78	20	587	98	371	35	46	550
% App. Total	12.1	79.1	8.1	0.6		24.2	58.6	8.1	9		9	74.3	13.3	3.4		17.8	67.5	6.4	8.4	
PHF	.835	.823	.767	.583	.849	.797	.811	.821	.671	.917	.663	.784	.750	.625	.843	.681	.843	.729	.767	.935

Counts Unlimited Inc.
25286 Jaclyn Avenue
Moreno Valley, CA 92557
951-485-7934

City of Rancho Cucamonga
N/S: Vineyard Avenue
E/W: Arrow Route
Weather: Sunny

File Name : RNCVIARAM
Site Code : 9150075
Start Date : 5/28/2009
Page No : 1

Groups Printed- Large 2 Axle Vehicles

	Vineyard Avenue Southbound					Arrow Route Westbound					Vineyard Avenue Northbound					Arrow Route Eastbound					
Start Time	Left	Thru	Right	RoR	App. Total	Left	Thru	Right	RoR	App. Total	Left	Thru	Right	RoR	App. Total	Left	Thru	Right	RoR	App. Total	Int. Total
07:00 AM	0	2	1	0	3	1	1	1	0	3	1	6	0	0	7	1	1	0	0	2	15
07:15 AM	1	5	0	1	7	3	1	0	1	5	0	8	0	0	8	1	4	0	0	5	25
07:30 AM	0	7	0	0	7	0	3	0	0	3	0	2	1	0	3	1	4	0	0	5	18
07:45 AM	0	4	1	0	5	2	2	0	0	4	0	6	0	0	6	2	1	0	0	3	18
Total	1	18	2	1	22	6	7	1	1	15	1	22	1	0	24	5	10	0	0	15	76
08:00 AM	0	2	1	0	3	1	2	0	0	3	0	2	0	0	2	0	0	1	0	1	9
08:15 AM	1	5	2	0	8	0	3	1	0	4	2	3	0	0	5	0	2	1	0	3	20
08:30 AM	2	1	1	0	4	1	3	0	0	4	0	5	1	0	6	0	3	2	0	5	19
08:45 AM	0	4	0	0	4	3	1	0	0	4	1	0	0	0	1	0	1	0	0	1	10
Total	3	12	4	0	19	5	9	1	0	15	3	10	1	0	14	0	6	4	0	10	58
Grand Total	4	30	6	1	41	11	16	2	1	30	4	32	2	0	38	5	16	4	0	25	134
Apprch %	9.8	73.2	14.6	2.4		36.7	53.3	6.7	3.3		10.5	84.2	5.3	0		20	64	16	0		
Total %	3	22.4	4.5	0.7	30.6	8.2	11.9	1.5	0.7	22.4	3	23.9	1.5	0	28.4	3.7	11.9	3	0	18.7	

	Vineyard Avenue Southbound					Arrow Route Westbound					Vineyard Avenue Northbound					Arrow Route Eastbound					
Start Time	Left	Thru	Right	RoR	App. Total		Thru	Right	RoR	App. Total		Thru	Right	RoR	App. Total		Thru	Right	RoR	App. Total	Int. Total
Peak Hour Analysis From 07:15 AM to 08:00 AM - Peak 1 of 1																					
Peak Hour for Entire Intersection Begins at 07:15 AM																					
07:15 AM	1	5	0	1	7	3	1	0	1	5	0	8	0	0	8	1	4	0	0	5	25
07:30 AM	0	7	0	0	7	0	3	0	0	3	0	2	1	0	3	1	4	0	0	5	18
07:45 AM	0	4	1	0	5	2	2	0	0	4	0	6	0	0	6	2	1	0	0	3	18
08:00 AM	0	2	1	0	3	1	2	0	0	3	0	2	0	0	2	0	0	1	0	1	9
Total Volume	1	18	2	1	22	6	8	0	1	15	0	18	1	0	19	4	9	1	0	14	70
% App. Total	4.5	81.8	9.1	4.5		40	53.3	0	6.7		0	94.7	5.3	0		28.6	64.3	7.1	0		
PHF	.250	.643	.500	.250	.786	.500	.667	.000	.250	.750	.000	.563	.250	.000	.594	.500	.563	.250	.000	.700	.700

Counts Unlimited Inc.
25286 Jaclyn Avenue
Moreno Valley, CA 92557
951-485-7934

City of Rancho Cucamonga
N/S: Vineyard Avenue
E/W: Arrow Route
Weather: Sunny

File Name : RNCVIARAM
Site Code : 9150075
Start Date : 5/28/2009
Page No : 2

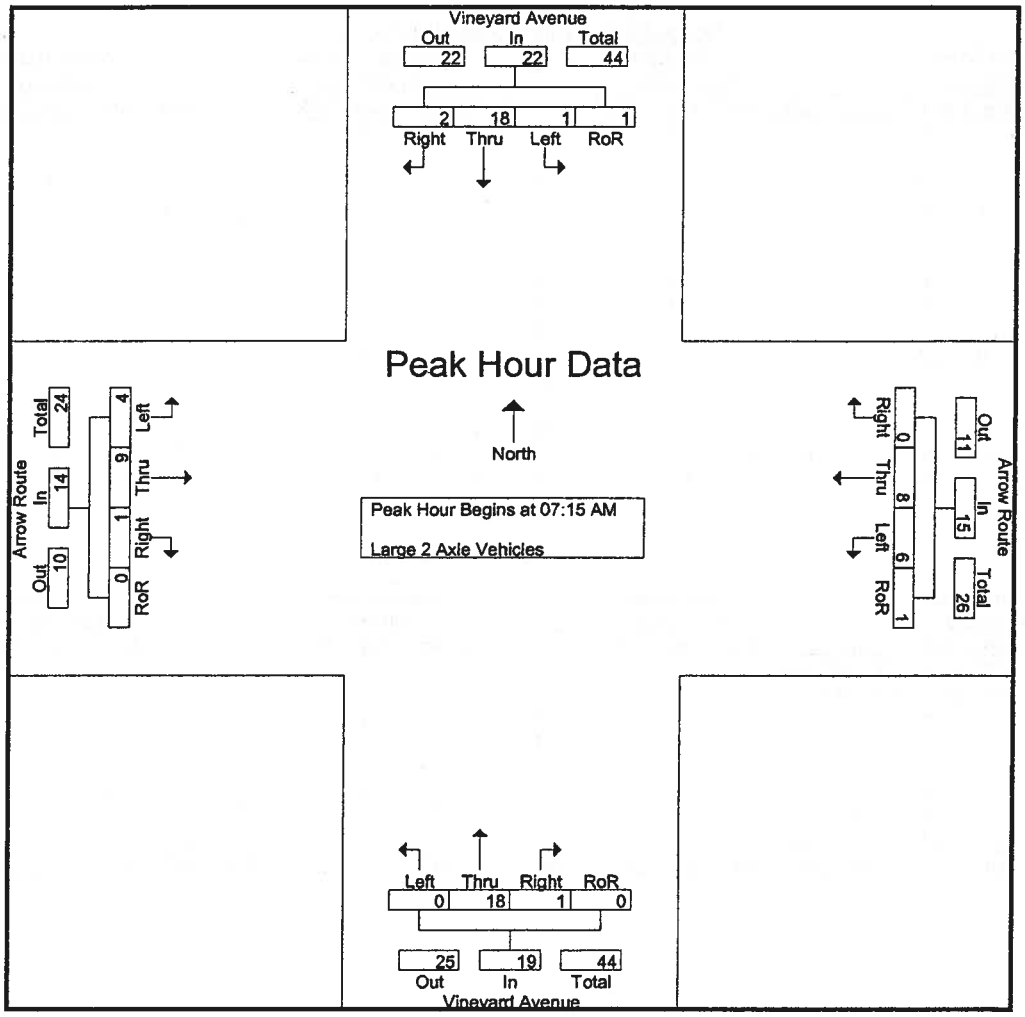

Peak Hour Analysis From 07:15 AM to 08:00 AM - Peak 1 of 1

Peak Hour for Each Approach Begins at:

	07:15 AM					07:15 AM					07:15 AM					07:15 AM				
+0 mins.	1	5	0	1	7	3	1	0	1	5	0	8	0	0	8	1	4	0	0	5
+15 mins.	0	7	0	0	7	0	3	0	0	3	0	2	1	0	3	1	4	0	0	5
+30 mins.	0	4	1	0	5	2	2	0	0	4	0	6	0	0	6	2	1	0	0	3
+45 mins.	0	2	1	0	3	1	2	0	0	3	0	2	0	0	2	0	0	1	0	1
Total Volume	1	18	2	1	22	6	8	0	1	15	0	18	1	0	19	4	9	1	0	14
% App. Total	4.5	81.8	9.1	4.5		40	53.3	0	6.7		0	94.7	5.3	0		28.6	64.3	7.1	0	
PHF	.250	.643	.500	.250	.786	.500	.667	.000	.250	.750	.000	.563	.250	.000	.594	.500	.563	.250	.000	.700

Counts Unlimited Inc.
25286 Jaclyn Avenue
Moreno Valley, CA 92557
951-485-7934

City of Rancho Cucamonga
N/S: Vineyard Avenue
E/W: Arrow Route
Weather: Sunny

File Name : RNCVIARAM
Site Code : 9150075
Start Date : 5/28/2009
Page No : 1

Groups Printed- 3 Axle Vehicles

	Vineyard Avenue Southbound					Arrow Route Westbound					Vineyard Avenue Northbound					Arrow Route Eastbound					
Start Time	Left	Thru	Right	RoR	App. Total	Left	Thru	Right	RoR	App. Total	Left	Thru	Right	RoR	App. Total	Left	Thru	Right	RoR	App. Total	Int. Total
07:00 AM	0	2	0	0	2	1	0	0	0	1	1	2	0	0	3	0	3	0	0	3	9
07:15 AM	1	2	0	0	3	0	0	0	0	0	0	2	0	0	2	0	1	0	0	1	6
07:30 AM	0	1	0	0	1	0	0	0	0	0	0	1	1	0	2	0	0	0	0	0	3
07:45 AM	1	0	0	0	1	0	1	0	0	1	1	3	0	0	4	0	1	0	0	1	7
Total	2	5	0	0	7	1	1	0	0	2	2	8	1	0	11	0	5	0	0	5	25
08:00 AM	0	0	0	0	0	0	0	0	0	0	0	3	0	0	3	0	0	0	0	0	3
08:15 AM	0	1	0	0	1	0	0	0	0	0	0	2	0	0	2	0	0	0	0	0	3
08:30 AM	0	0	0	0	0	1	0	1	0	2	1	0	0	0	1	0	1	0	0	1	4
08:45 AM	0	0	0	0	0	0	0	0	0	0	0	1	0	0	1	0	1	0	0	1	2
Total	0	1	0	0	1	1	0	1	0	2	1	6	0	0	7	0	2	0	0	2	12
Grand Total	2	6	0	0	8	2	1	1	0	4	3	14	1	0	18	0	7	0	0	7	37
Apprch %	25	75	0	0		50	25	25	0		16.7	77.8	5.6	0		0	100	0	0		
Total %	5.4	16.2	0	0	21.6	5.4	2.7	2.7	0	10.8	8.1	37.8	2.7	0	48.6	0	18.9	0	0	18.9	

	Vineyard Avenue Southbound					Arrow Route Westbound					Vineyard Avenue Northbound					Arrow Route Eastbound					
Start Time	Left	Thru	Right	RoR	App. Total		Thru	Right	RoR	App. Total		Thru	Right	RoR	App. Total		Thru	Right	RoR	App. Total	Int. Total
Peak Hour Analysis From 07:15 AM to 08:00 AM - Peak 1 of 1																					
Peak Hour for Entire Intersection Begins at 07:15 AM																					
07:15 AM	1	2	0	0	3	0	0	0	0	0	0	2	0	0	2	0	1	0	0	1	6
07:30 AM	0	1	0	0	1	0	0	0	0	0	0	1	1	0	2	0	0	0	0	0	3
07:45 AM	1	0	0	0	1	0	1	0	0	1	1	3	0	0	4	0	1	0	0	1	7
08:00 AM	0	0	0	0	0	0	0	0	0	0	0	3	0	0	3	0	0	0	0	0	3
Total Volume	2	3	0	0	5	0	1	0	0	1	1	9	1	0	11	0	2	0	0	2	19
% App. Total	40	60	0	0		0	100	0	0		9.1	81.8	9.1	0		0	100	0	0		
PHF	.500	.375	.000	.000	.417	.000	.250	.000	.000	.250	.250	.750	.250	.000	.688	.000	.500	.000	.000	.500	.679

Counts Unlimited Inc.
25286 Jaclyn Avenue
Moreno Valley, CA 92557
951-485-7934

City of Rancho Cucamonga
N/S: Vineyard Avenue
E/W: Arrow Route
Weather: Sunny

File Name : RNCVIARAM
Site Code : 9150075
Start Date : 5/28/2009
Page No : 2

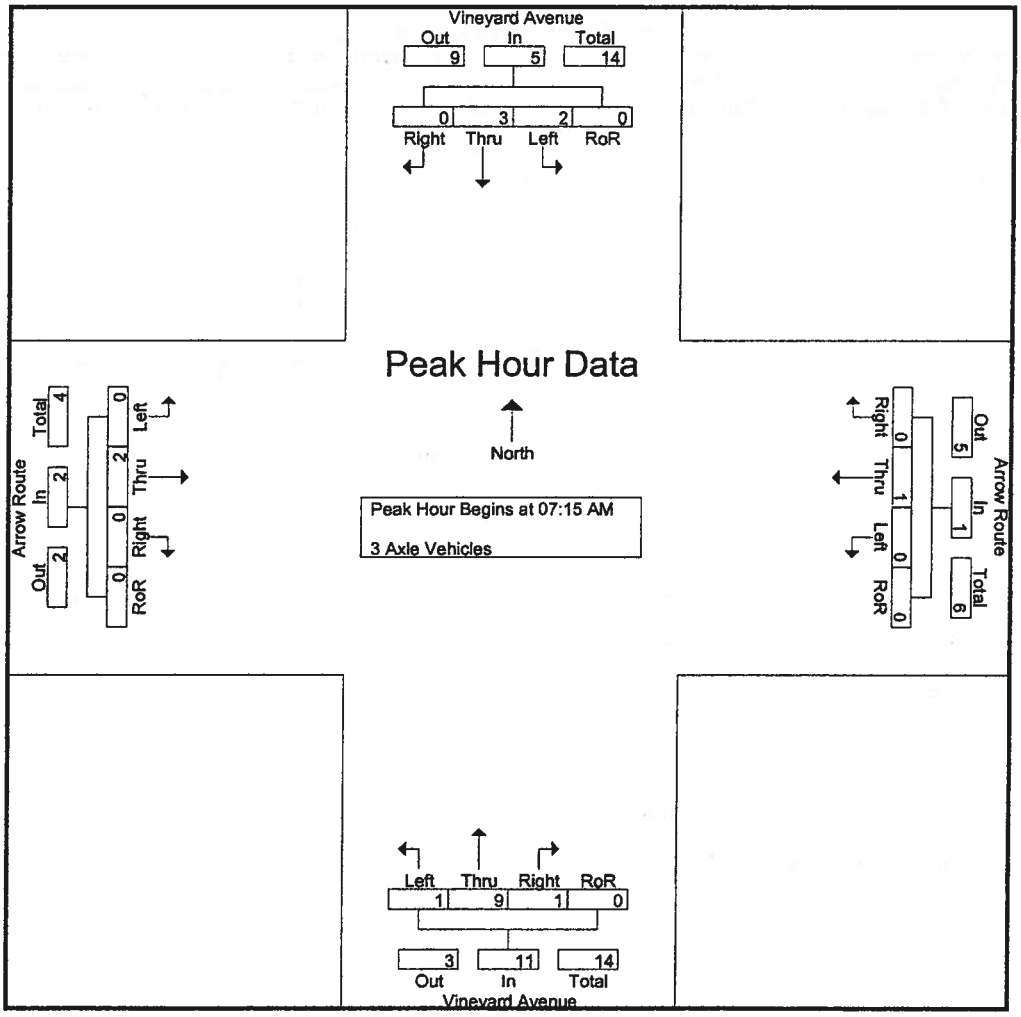

Peak Hour Analysis From 07:15 AM to 08:00 AM - Peak 1 of 1

Peak Hour for Each Approach Begins at:

	07:15 AM					07:15 AM					07:15 AM					07:15 AM				
+0 mins.	1	2	0	0	3	0	0	0	0	0	0	2	0	0	2	0	1	0	0	1
+15 mins.	0	1	0	0	1	0	0	0	0	0	0	1	1	0	2	0	0	0	0	0
+30 mins.	1	0	0	0	1	0	1	0	0	1	1	3	0	0	4	0	1	0	0	1
+45 mins.	0	0	0	0	0	0	0	0	0	0	0	3	0	0	3	0	0	0	0	0
Total Volume	2	3	0	0	5	0	1	0	0	1	1	9	1	0	11	0	2	0	0	2
% App. Total	40	60	0	0		0	100	0	0		9.1	81.8	9.1	0		0	100	0	0	
PHF	.500	.375	.000	.000	.417	.000	.250	.000	.000	.250	.250	.750	.250	.000	.688	.000	.500	.000	.000	.500

Counts Unlimited Inc.
25286 Jaclyn Avenue
Moreno Valley, CA 92557
951-485-7934

City of Rancho Cucamonga
N/S: Vineyard Avenue
E/W: Arrow Route
Weather: Sunny

File Name : RNCVIARAM
Site Code : 9150075
Start Date : 5/28/2009
Page No : 1

Groups Printed- 4+ Axle Trucks

	Vineyard Avenue Southbound					Arrow Route Westbound					Vineyard Avenue Northbound					Arrow Route Eastbound					
Start Time	Left	Thru	Right	RoR	App. Total	Left	Thru	Right	RoR	App. Total	Left	Thru	Right	RoR	App. Total	Left	Thru	Right	RoR	App. Total	Int. Total
07:00 AM	0	1	0	0	1	4	0	0	0	4	0	0	1	0	1	0	1	0	0	1	7
07:15 AM	0	3	0	0	3	0	0	0	0	0	0	2	0	0	2	0	1	0	0	1	6
07:30 AM	0	6	0	0	6	0	0	0	0	0	0	1	1	0	2	0	0	0	0	0	8
07:45 AM	0	0	0	0	0	2	0	0	0	2	0	3	0	0	3	0	0	0	0	0	5
Total	0	10	0	0	10	6	0	0	0	6	0	6	2	0	8	0	2	0	0	2	26
08:00 AM	0	3	0	0	3	0	0	0	0	0	0	1	0	0	1	0	0	0	0	0	4
08:15 AM	0	1	0	0	1	0	1	0	0	1	0	0	0	0	0	0	0	0	0	0	2
08:30 AM	0	2	0	0	2	0	0	0	0	0	0	0	0	0	0	0	0	0	0	0	2
08:45 AM	0	1	0	0	1	0	2	0	0	2	1	0	0	0	1	0	0	0	0	0	4
Total	0	7	0	0	7	0	3	0	0	3	1	1	0	0	2	0	0	0	0	0	12
Grand Total	0	17	0	0	17	6	3	0	0	9	1	7	2	0	10	0	2	0	0	2	38
Apprch %	0	100	0	0		66.7	33.3	0	0		10	70	20	0		0	100	0	0		
Total %	0	44.7	0	0	44.7	15.8	7.9	0	0	23.7	2.6	18.4	5.3	0	26.3	0	5.3	0	0	5.3	

	Vineyard Avenue Southbound					Arrow Route Westbound					Vineyard Avenue Northbound					Arrow Route Eastbound					
Start Time	Left	Thru	Right	RoR	App. Total		Thru	Right	RoR	App. Total		Thru	Right	RoR	App. Total		Thru	Right	RoR	App. Total	Int. Total
Peak Hour Analysis From 07:15 AM to 08:00 AM - Peak 1 of 1																					
Peak Hour for Entire Intersection Begins at 07:15 AM																					
07:15 AM	0	3	0	0	3	0	0	0	0	0	0	2	0	0	2	0	1	0	0	1	6
07:30 AM	0	6	0	0	6	0	0	0	0	0	0	1	1	0	2	0	0	0	0	0	8
07:45 AM	0	0	0	0	0	2	0	0	0	2	0	3	0	0	3	0	0	0	0	0	5
08:00 AM	0	3	0	0	3	0	0	0	0	0	0	1	0	0	1	0	0	0	0	0	4
Total Volume	0	12	0	0	12	2	0	0	0	2	0	7	1	0	8	0	1	0	0	1	23
% App. Total	0	100	0	0		100	0	0	0		0	87.5	12.5	0		0	100	0	0		
PHF	.000	.500	.000	.000	.500	.250	.000	.000	.000	.250	.000	.583	.250	.000	.667	.000	.250	.000	.000	.250	.719

Counts Unlimited Inc.
25286 Jaclyn Avenue
Moreno Valley, CA 92557
951-485-7934

City of Rancho Cucamonga
N/S: Vineyard Avenue
E/W: Arrow Route
Weather: Sunny

File Name : RNCVIARAM
Site Code : 9150075
Start Date : 5/28/2009
Page No : 2

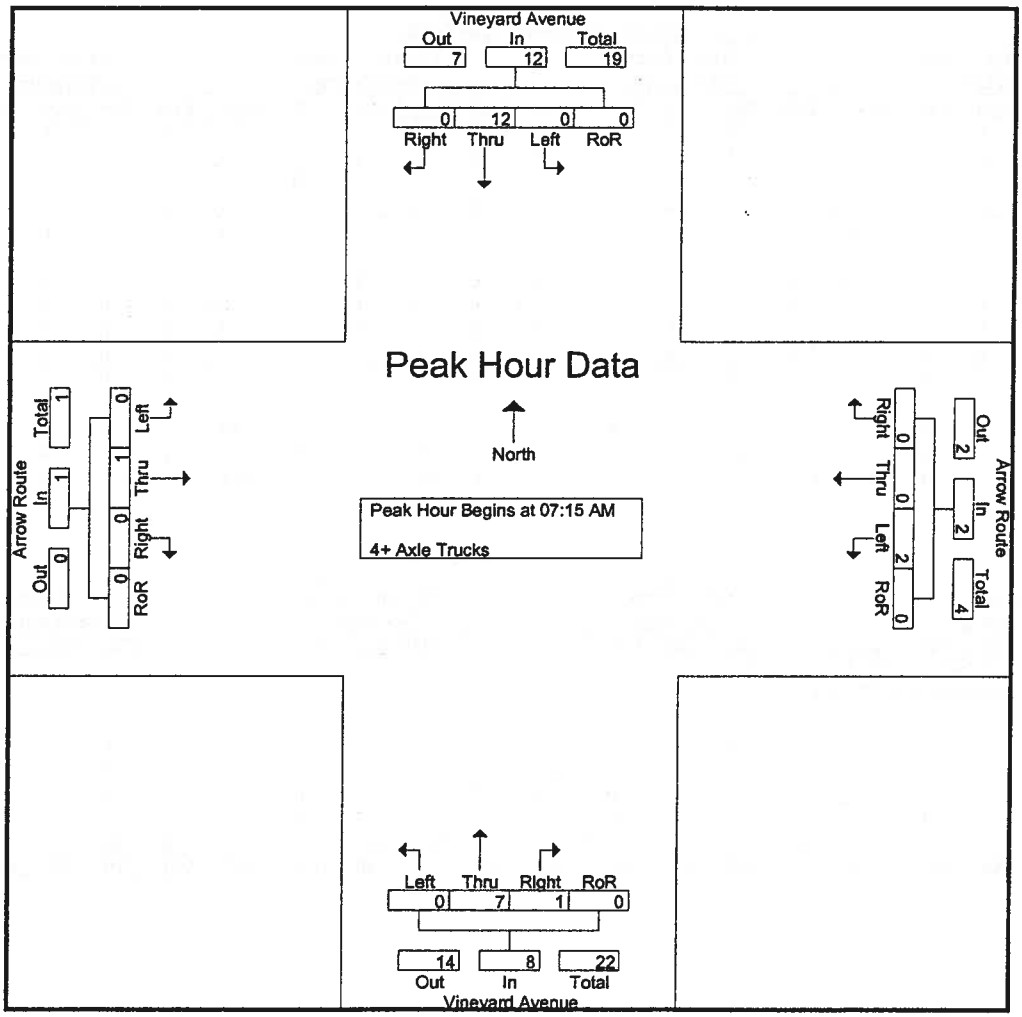

Peak Hour Analysis From 07:15 AM to 08:00 AM - Peak 1 of 1

Peak Hour for Each Approach Begins at:

	07:15 AM					07:15 AM					07:15 AM					07:15 AM				
+0 mins.	0	3	0	0	3	0	0	0	0	0	0	2	0	0	2	0	1	0	0	1
+15 mins.	0	6	0	0	6	0	0	0	0	0	0	1	1	0	2	0	0	0	0	0
+30 mins.	0	0	0	0	0	2	0	0	0	2	0	3	0	0	3	0	0	0	0	0
+45 mins.	0	3	0	0	3	0	0	0	0	0	0	1	0	0	1	0	0	0	0	0
Total Volume	0	12	0	0	12	2	0	0	0	2	0	7	1	0	8	0	1	0	0	1
% App. Total	0	100	0	0		100	0	0	0		0	87.5	12.5	0		0	100	0	0	
PHF	.000	.500	.000	.000	.500	.250	.000	.000	.000	.250	.000	.583	.250	.000	.667	.000	.250	.000	.000	.250

Counts Unlimited Inc.
25286 Jaclyn Avenue
Moreno Valley, CA 92557
951-485-7934

City of Rancho Cucamonga
N/S: Vineyard Avenue
E/W: Arrow Route
Weather: Sunny

File Name : RNCVIARPM
Site Code : 9150075
Start Date : 5/28/2009
Page No : 1

Groups Printed- Passenger Vehicles - Large 2 Axle Vehicles - 3 Axle Vehicles - 4+ Axle Trucks

	Vineyard Avenue Southbound					Arrow Route Westbound					Vineyard Avenue Northbound					Arrow Route Eastbound					
Start Time	Left	Thru	Right	RoR	App. Total	Left	Thru	Right	RoR	App. Total	Left	Thru	Right	RoR	App. Total	Left	Thru	Right	RoR	App. Total	Int. Total
04:00 PM	28	135	21	3	187	32	94	22	6	154	22	192	22	4	240	23	97	11	3	134	715
04:15 PM	28	143	17	4	192	29	88	23	21	161	27	190	21	3	241	18	89	5	3	115	709
04:30 PM	21	130	30	1	182	28	100	29	11	168	17	224	24	2	267	32	108	5	9	154	771
04:45 PM	37	115	15	5	172	17	100	27	22	166	19	195	28	5	247	26	94	6	5	131	716
Total	114	523	83	13	733	106	382	101	60	649	85	801	95	14	995	99	388	27	20	534	2911
05:00 PM	34	152	31	3	220	30	96	26	20	172	23	234	34	3	294	24	104	8	10	146	832
05:15 PM	17	156	22	1	196	33	120	31	28	212	12	183	21	1	217	25	106	8	7	146	771
05:30 PM	30	141	21	5	197	29	110	24	12	175	18	242	39	9	308	27	89	9	6	131	811
05:45 PM	23	150	17	3	193	40	83	29	19	171	14	223	32	2	271	23	76	7	6	112	747
Total	104	599	91	12	806	132	409	110	79	730	67	882	126	15	1090	99	375	32	29	535	3161
Grand Total	218	1122	174	25	1539	238	791	211	139	1379	152	1683	221	29	2085	198	763	59	49	1069	6072
Apprch %	14.2	72.9	11.3	1.6		17.3	57.4	15.3	10.1		7.3	80.7	10.6	1.4		18.5	71.4	5.5	4.6		
Total %	3.6	18.5	2.9	0.4	25.3	3.9	13	3.5	2.3	22.7	2.5	27.7	3.6	0.5	34.3	3.3	12.6	1	0.8	17.6	
Passenger Vehicles		1106										1650									
% Passenger Vehicles	96.8	98.6	98.3	100	98.3	97.5	98	98.1	100	98.1	98	98	99.1	100	98.2	99	95.7	94.9	100	96.4	97.9
Large 2 Axle Vehicles																					
% Large 2 Axle Vehicles	1.4	1.2	1.1	0	1.2	1.3	1.9	1.9	0	1.6	2	1.2	0.9	0	1.2	1	2.2	1.7	0	1.9	1.4
3 Axle Vehicles	4	1	1	0	6	0	1	0	0	1	0	6	0	0	6	0	16	2	0	18	31
% 3 Axle Vehicles	1.8	0.1	0.6	0	0.4	0	0.1	0	0	0.1	0	0.4	0	0	0.3	0	2.1	3.4	0	1.7	0.5
4+ Axle Trucks	0	1	0	0	1	3	0	0	0	3	0	7	0	0	7	0	0	0	0	0	11
% 4+ Axle Trucks																					

	Vineyard Avenue Southbound					Arrow Route Westbound					Vineyard Avenue Northbound					Arrow Route Eastbound					
Start Time	Left	Thru	Right	RoR	App. Total	Left	Thru	Right	RoR	App. Total	Left	Thru	Right	RoR	App. Total	Left	Thru	Right	RoR	App. Total	Int. Total
Peak Hour Analysis From 04:00 PM to 05:45 PM - Peak 1 of 1																					
Peak Hour for Entire Intersection Begins at 05:00 PM																					
05:00 PM	**34**	152	**31**	3	**220**	30	96	26	20	172	**23**	234	34	3	294	24	104	8	**10**	**146**	**832**
05:15 PM	17	**156**	22	1	196	33	**120**	**31**	**28**	**212**	12	183	21	1	217	25	**106**	8	7	146	771
05:30 PM	30	141	21	**5**	197	29	110	24	12	175	18	**242**	**39**	**9**	**308**	**27**	89	**9**	6	131	811
05:45 PM	23	150	17	3	193	**40**	83	29	19	171	14	223	32	2	271	23	76	7	6	112	747
Total Volume	104	599	91	12	806	132	409	110	79	730	67	882	126	15	1090	99	375	32	29	535	3161
% App. Total	12.9	74.3	11.3	1.5		18.1	56	15.1	10.8		6.1	80.9	11.6	1.4		18.5	70.1	6	5.4		
PHF	.765	.960	.734	.600	.916	.825	.852	.887	.705	.861	.728	.911	.808	.417	.885	.917	.884	.889	.725	.916	.950

Counts Unlimited Inc.
25286 Jaclyn Avenue
Moreno Valley, CA 92557
951-485-7934

City of Rancho Cucamonga
N/S: Vineyard Avenue
E/W: Arrow Route
Weather: Sunny

File Name : RNCVIARPM
Site Code : 9150075
Start Date : 5/28/2009
Page No : 2

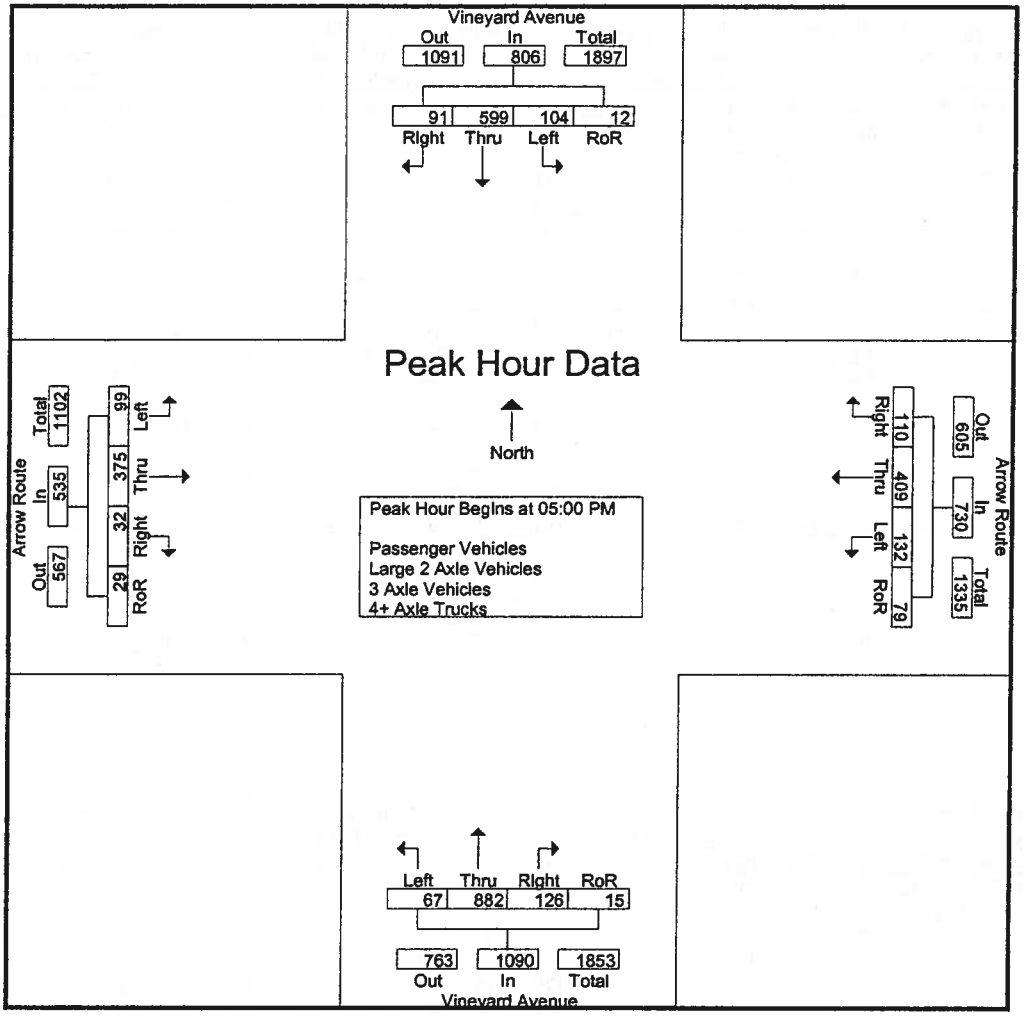

Peak Hour Analysis From 04:00 PM to 05:45 PM - Peak 1 of 1

Peak Hour for Each Approach Begins at:

	05:00 PM					05:00 PM					05:00 PM					04:30 PM				
+0 mins.	**34**	152	**31**	3	**220**	30	96	26	20	172	**23**	234	34	3	294	**32**	**108**	5	9	**154**
+15 mins.	17	**156**	22	1	196	33	**120**	**31**	**28**	**212**	12	183	21	1	217	26	94	6	5	131
+30 mins.	30	141	21	**5**	197	29	110	24	12	175	18	**242**	**39**	**9**	**308**	24	104	**8**	**10**	146
+45 mins.	23	150	17	3	193	**40**	83	29	19	171	14	223	32	2	271	25	106	8	7	146
Total Volume	104	599	91	12	806	132	409	110	79	730	67	882	126	15	1090	107	412	27	31	577
% App. Total	12.9	74.3	11.3	1.5		18.1	56	15.1	10.8		6.1	80.9	11.6	1.4		18.5	71.4	4.7	5.4	
PHF	.765	.960	.734	.600	.916	.825	.852	.887	.705	.861	.728	.911	.808	.417	.885	.836	.954	.844	.775	.937

Counts Unlimited Inc.
25286 Jaclyn Avenue
Moreno Valley, CA 92557
951-485-7934

City of Rancho Cucamonga
N/S: Vineyard Avenue
E/W: Arrow Route
Weather: Sunny

File Name : RNCVIARPM
Site Code : 9150075
Start Date : 5/28/2009
Page No : 1

Groups Printed- Passenger Vehicles

	Vineyard Avenue Southbound					Arrow Route Westbound					Vineyard Avenue Northbound					Arrow Route Eastbound					
Start Time	Left	Thru	Right	RoR	App. Total	Left	Thru	Right	RoR	App. Total	Left	Thru	Right	RoR	App. Total	Left	Thru	Right	RoR	App. Total	Int. Total
04:00 PM	27	132	21	3	183	31	89	22	6	148	22	185	22	4	233	23	90	11	3	127	691
04:15 PM	28	136	17	4	185	27	87	22	21	157	27	185	21	3	236	16	85	4	3	108	686
04:30 PM	19	129	30	1	179	28	96	28	11	163	15	218	24	2	259	32	102	5	9	148	749
04:45 PM	36	114	14	5	169	16	99	26	22	163	18	193	28	5	244	26	86	6	5	123	699
Total	110	511	82	13	716	102	371	98	60	631	82	781	95	14	972	97	363	26	20	506	2825
05:00 PM	31	150	31	3	215	29	95	25	20	169	23	230	34	3	290	24	103	7	10	144	818
05:15 PM	17	154	22	1	194	33	118	31	28	210	12	182	21	1	216	25	104	7	7	143	763
05:30 PM	30	141	20	5	196	28	108	24	12	172	18	235	38	9	300	27	87	9	6	129	797
05:45 PM	23	150	16	3	192	40	83	29	19	171	14	222	31	2	269	23	73	7	6	109	741
Total	101	595	89	12	797	130	404	109	79	722	67	869	124	15	1075	99	367	30	29	525	3119
Grand Total	211	1106	171	25	1513	232	775	207	139	1353	149	1650	219	29	2047	196	730	56	49	1031	5944
Apprch %	13.9	73.1	11.3	1.7		17.1	57.3	15.3	10.3		7.3	80.6	10.7	1.4		19	70.8	5.4	4.8		
Total %	3.5	18.6	2.9	0.4	25.5	3.9	13	3.5	2.3	22.8	2.5	27.8	3.7	0.5	34.4	3.3	12.3	0.9	0.8	17.3	

	Vineyard Avenue Southbound					Arrow Route Westbound					Vineyard Avenue Northbound					Arrow Route Eastbound					
Start Time	Left	Thru	Right	RoR	App. Total		Thru	Right	RoR	App. Total		Thru	Right	RoR	App. Total		Thru	Right	RoR	App. Total	Int. Total
Peak Hour Analysis From 04:00 PM to 05:45 PM - Peak 1 of 1																					
Peak Hour for Entire Intersection Begins at 05:00 PM																					
05:00 PM	**31**	150	**31**	3	**215**	29	95	25	20	169	**23**	230	34	3	290	24	103	7	**10**	**144**	**818**
05:15 PM	17	**154**	22	1	194	33	**118**	**31**	**28**	**210**	12	182	21	1	216	25	**104**	7	7	143	763
05:30 PM	30	141	20	5	196	28	108	24	12	172	18	**235**	**38**	**9**	**300**	**27**	87	**9**	6	129	797
05:45 PM	23	150	16	3	192	**40**	83	29	19	171	14	222	31	2	269	23	73	7	6	109	741
Total Volume	101	595	89	12	797	130	404	109	79	722	67	869	124	15	1075	99	367	30	29	525	3119
% App. Total	12.7	74.7	11.2	1.5		18	56	15.1	10.9		6.2	80.8	11.5	1.4		18.9	69.9	5.7	5.5		
PHF	.815	.966	.718	.600	.927	.813	.856	.879	.705	.860	.728	.924	.816	.417	.896	.917	.882	.833	.725	.911	.953

Counts Unlimited Inc.
25286 Jaclyn Avenue
Moreno Valley, CA 92557
951-485-7934

City of Rancho Cucamonga
N/S: Vineyard Avenue
E/W: Arrow Route
Weather: Sunny

File Name : RNCVIARPM
Site Code : 9150075
Start Date : 5/28/2009

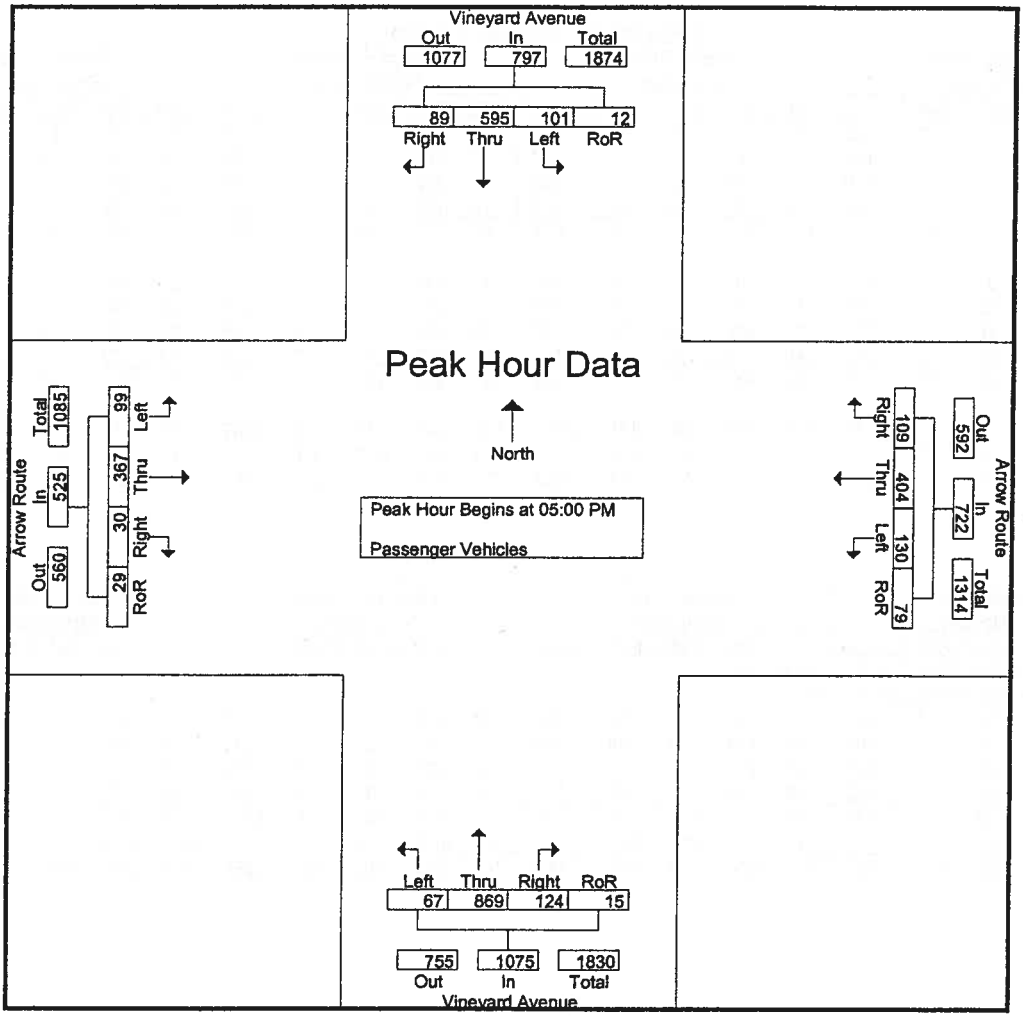

Peak Hour Analysis From 04:00 PM to 05:45 PM - Peak 1 of 1

Peak Hour for Each Approach Begins at:

	05:00 PM					05:00 PM					05:00 PM					04:30 PM				
+0 mins.	**31**	150	**31**	3	**215**	29	95	25	20	169	**23**	230	34	3	290	**32**	102	5	9	**148**
+15 mins.	17	**154**	22	1	194	33	**118**	**31**	**28**	**210**	12	182	21	1	216	26	86	6	5	123
+30 mins.	30	141	20	**5**	196	28	108	24	12	172	18	**235**	**38**	**9**	**300**	24	103	**7**	**10**	144
+45 mins.	23	150	16	3	192	**40**	83	29	19	171	14	222	31	2	269	25	**104**	7	7	143
Total Volume	101	595	89	12	797	130	404	109	79	722	67	869	124	15	1075	107	395	25	31	558
% App. Total	12.7	74.7	11.2	1.5		18	56	15.1	10.9		6.2	80.8	11.5	1.4		19.2	70.8	4.5	5.6	
PHF	.815	.966	.718	.600	.927	.813	.856	.879	.705	.860	.728	.924	.816	.417	.896	.836	.950	.893	.775	.943

Counts Unlimited Inc.
25286 Jaclyn Avenue
Moreno Valley, CA 92557
951-485-7934

City of Rancho Cucamonga
N/S: Vineyard Avenue
E/W: Arrow Route
Weather: Sunny

File Name : RNCVIARPM
Site Code : 9150075
Start Date : 5/28/2009
Page No : 1

Groups Printed- Large 2 Axle Vehicles

	Vineyard Avenue Southbound					Arrow Route Westbound					Vineyard Avenue Northbound					Arrow Route Eastbound					
Start Time	Left	Thru	Right	RoR	App. Total	Left	Thru	Right	RoR	App. Total	Left	Thru	Right	RoR	App. Total	Left	Thru	Right	RoR	App. Total	Int. Total
04:00 PM	1	3	0	0	4	1	4	0	0	5	0	6	0	0	6	0	2	0	0	2	17
04:15 PM	0	6	0	0	6	1	1	1	0	3	0	3	0	0	3	2	2	0	0	4	16
04:30 PM	0	1	0	0	1	0	4	1	0	5	2	3	0	0	5	0	0	0	0	0	11
04:45 PM	0	0	0	0	0	0	1	1	0	2	1	1	0	0	2	0	5	0	0	5	9
Total	1	10	0	0	11	2	10	3	0	15	3	13	0	0	16	2	9	0	0	11	53
05:00 PM	2	2	0	0	4	1	1	1	0	3	0	0	0	0	0	0	1	0	0	1	8
05:15 PM	0	2	0	0	2	0	2	0	0	2	0	1	0	0	1	0	2	1	0	3	8
05:30 PM	0	0	1	0	1	0	2	0	0	2	0	5	1	0	6	0	2	0	0	2	11
05:45 PM	0	0	1	0	1	0	0	0	0	0	0	1	1	0	2	0	3	0	0	3	6
Total	2	4	2	0	8	1	5	1	0	7	0	7	2	0	9	0	8	1	0	9	33
Grand Total	3	14	2	0	19	3	15	4	0	22	3	20	2	0	25	2	17	1	0	20	86
Apprch %	15.8	73.7	10.5	0		13.6	68.2	18.2	0		12	80	8	0		10	85	5	0		
Total %	3.5	16.3	2.3	0	22.1	3.5	17.4	4.7	0	25.6	3.5	23.3	2.3	0	29.1	2.3	19.8	1.2	0	23.3	

	Vineyard Avenue Southbound					Arrow Route Westbound					Vineyard Avenue Northbound					Arrow Route Eastbound					
Start Time	Left	Thru	Right	RoR	App. Total		Thru	Right	RoR	App. Total		Thru	Right	RoR	App. Total		Thru	Right	RoR	App. Total	Int. Total
Peak Hour Analysis From 05:00 PM to 05:45 PM - Peak 1 of 1																					
Peak Hour for Entire Intersection Begins at 05:00 PM																					
05:00 PM	**2**	**2**	0	0	4	**1**	1	**1**	0	**3**	0	0	0	0	0	0	1	0	0	1	8
05:15 PM	0	2	0	0	2	0	**2**	0	0	2	0	1	0	0	1	0	2	**1**	0	**3**	8
05:30 PM	0	0	**1**	0	1	0	2	0	0	2	0	**5**	**1**	0	**6**	0	2	0	0	2	**11**
05:45 PM	0	0	1	0	1	0	0	0	0	0	0	1	1	0	2	0	**3**	0	0	3	6
Total Volume	2	4	2	0	8	1	5	1	0	7	0	7	2	0	9	0	8	1	0	9	33
% App. Total	25	50	25	0		14.3	71.4	14.3	0		0	77.8	22.2	0		0	88.9	11.1	0		
PHF	.250	.500	.500	.000	.500	.250	.625	.250	.000	.583	.000	.350	.500	.000	.375	.000	.667	.250	.000	.750	.750

Counts Unlimited Inc.
25286 Jaclyn Avenue
Moreno Valley, CA 92557
951-485-7934

City of Rancho Cucamonga
N/S: Vineyard Avenue
E/W: Arrow Route
Weather: Sunny

File Name : RNCVIARPM
Site Code : 9150075
Start Date : 5/28/2009
Page No : 2

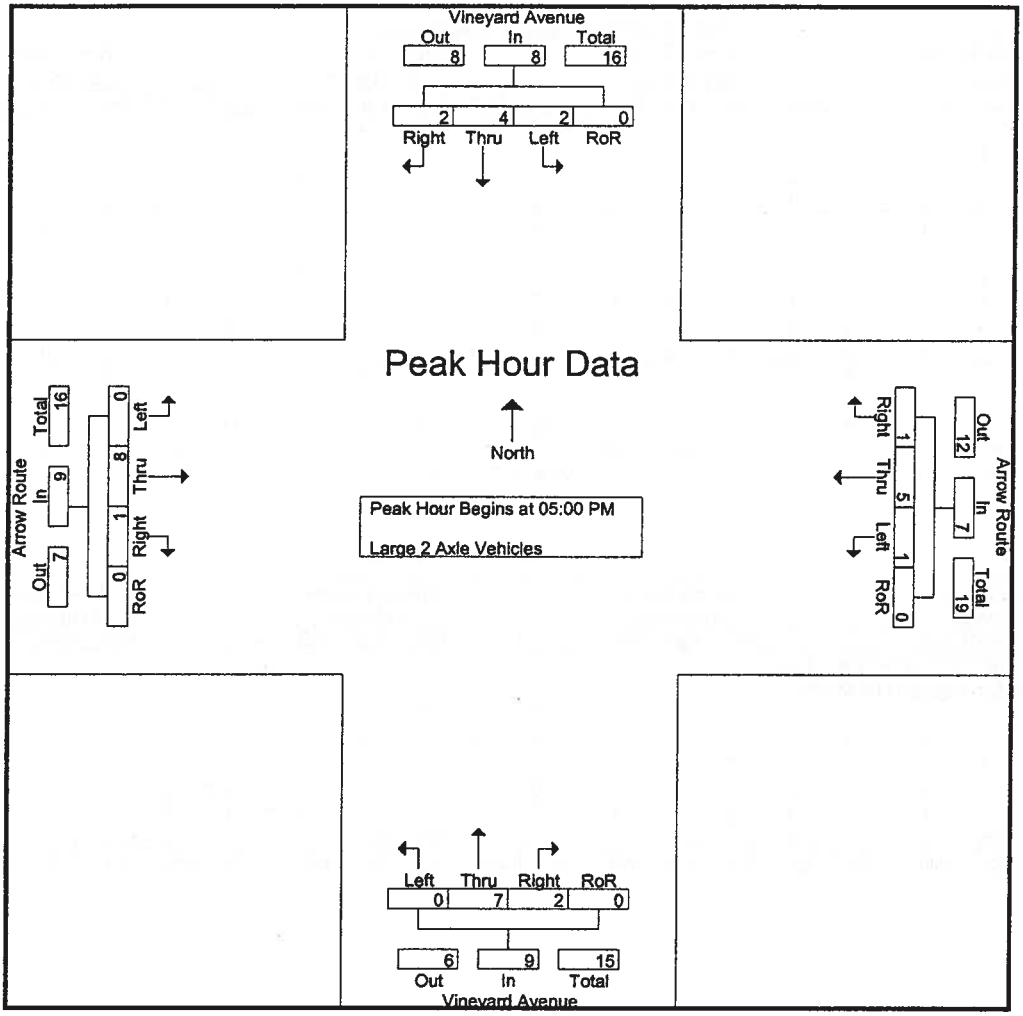

Peak Hour Analysis From 05:00 PM to 05:45 PM - Peak 1 of 1

Peak Hour for Each Approach Begins at:

	05:00 PM					05:00 PM					05:00 PM					05:00 PM				
+0 mins.	2	2	0	0	4	1	1	1	0	3	0	0	0	0	0	0	1	0	0	1
+15 mins.	0	2	0	0	2	0	2	0	0	2	0	1	0	0	1	0	2	1	0	3
+30 mins.	0	0	1	0	1	0	2	0	0	2	0	5	1	0	6	0	2	0	0	2
+45 mins.	0	0	1	0	1	0	0	0	0	0	0	1	1	0	2	0	3	0	0	3
Total Volume	2	4	2	0	8	1	5	1	0	7	0	7	2	0	9	0	8	1	0	9
% App. Total	25	50	25	0		14.3	71.4	14.3	0		0	77.8	22.2	0		0	88.9	11.1	0	
PHF	.250	.500	.500	.000	.500	.250	.625	.250	.000	.583	.000	.350	.500	.000	.375	.000	.667	.250	.000	.750

Counts Unlimited Inc.
25286 Jaclyn Avenue
Moreno Valley, CA 92557
951-485-7934

City of Rancho Cucamonga
N/S: Vineyard Avenue
E/W: Arrow Route
Weather: Sunny

File Name : RNCVIARPM
Site Code : 9150075
Start Date : 5/28/2009
Page No : 1

Groups Printed- 3 Axle Vehicles

	Vineyard Avenue Southbound					Arrow Route Westbound					Vineyard Avenue Northbound					Arrow Route Eastbound					
Start Time	Left	Thru	Right	RoR	App. Total	Left	Thru	Right	RoR	App. Total	Left	Thru	Right	RoR	App. Total	Left	Thru	Right	RoR	App. Total	Int. Total
04:00 PM	0	0	0	0	0	0	1	0	0	1	0	0	0	0	0	0	5	0	0	5	6
04:15 PM	0	1	0	0	1	0	0	0	0	0	0	1	0	0	1	0	2	1	0	3	5
04:30 PM	2	0	0	0	2	0	0	0	0	0	0	2	0	0	2	0	6	0	0	6	10
04:45 PM	1	0	1	0	2	0	0	0	0	0	0	1	0	0	1	0	3	0	0	3	6
Total	3	1	1	0	5	0	1	0	0	1	0	4	0	0	4	0	16	1	0	17	27
05:00 PM	1	0	0	0	1	0	0	0	0	0	0	1	0	0	1	0	0	1	0	1	3
05:15 PM	0	0	0	0	0	0	0	0	0	0	0	0	0	0	0	0	0	0	0	0	0
05:30 PM	0	0	0	0	0	0	0	0	0	0	0	1	0	0	1	0	0	0	0	0	1
05:45 PM	0	0	0	0	0	0	0	0	0	0	0	0	0	0	0	0	0	0	0	0	0
Total	1	0	0	0	1	0	0	0	0	0	0	2	0	0	2	0	0	1	0	1	4
Grand Total	4	1	1	0	6	0	1	0	0	1	0	6	0	0	6	0	16	2	0	18	31
Apprch %	66.7	16.7	16.7	0		0	100	0	0		0	100	0	0		0	88.9	11.1	0		
Total %	12.9	3.2	3.2	0	19.4	0	3.2	0	0	3.2	0	19.4	0	0	19.4	0	51.6	6.5	0	58.1	

	Vineyard Avenue Southbound					Arrow Route Westbound					Vineyard Avenue Northbound					Arrow Route Eastbound					
Start Time	Left	Thru	Right	RoR	App. Total		Thru	Right	RoR	App. Total		Thru	Right	RoR	App. Total		Thru	Right	RoR	App. Total	Int. Total
Peak Hour Analysis From 05:00 PM to 05:45 PM - Peak 1 of 1																					
Peak Hour for Entire Intersection Begins at 05:00 PM																					
05:00 PM	1	0	0	0	1	0	0	0	0	0	0	1	0	0	1	0	0	1	0	1	3
05:15 PM	0	0	0	0	0	0	0	0	0	0	0	0	0	0	0	0	0	0	0	0	0
05:30 PM	0	0	0	0	0	0	0	0	0	0	0	1	0	0	1	0	0	0	0	0	1
05:45 PM	0	0	0	0	0	0	0	0	0	0	0	0	0	0	0	0	0	0	0	0	0
Total Volume	1	0	0	0	1	0	0	0	0	0	0	2	0	0	2	0	0	1	0	1	4
% App. Total	100	0	0	0		0	0	0	0		0	100	0	0		0	0	100	0		
PHF	.250	.000	.000	.000	.250	.000	.000	.000	.000	.000	.000	.500	.000	.000	.500	.000	.000	.250	.000	.250	.333

Counts Unlimited Inc.
25286 Jaclyn Avenue
Moreno Valley, CA 92557
951-485-7934

City of Rancho Cucamonga
N/S: Vineyard Avenue
E/W: Arrow Route
Weather: Sunny

File Name : RNCVIARPM
Site Code : 9150075
Start Date : 5/28/2009
Page No : 2

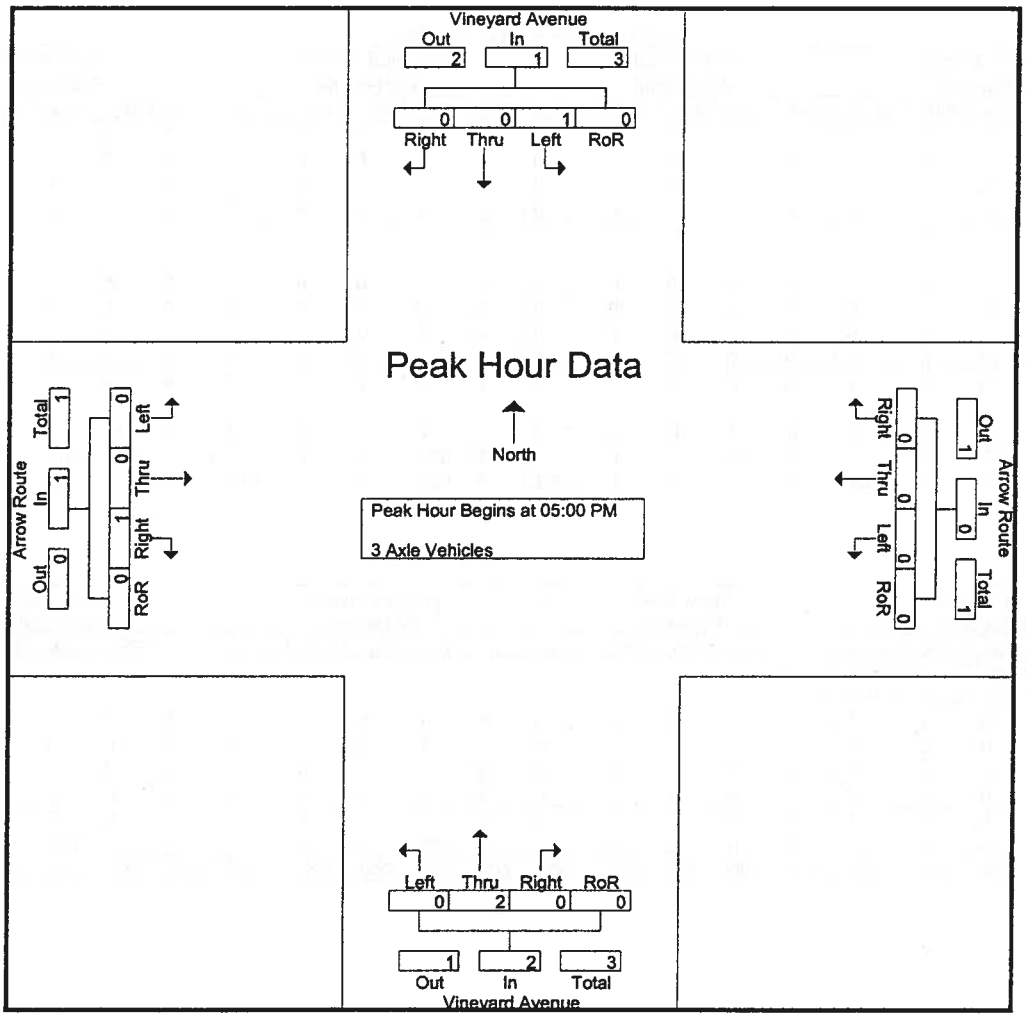

Peak Hour Analysis From 05:00 PM to 05:45 PM - Peak 1 of 1

Peak Hour for Each Approach Begins at:

	05:00 PM					05:00 PM					05:00 PM					05:00 PM				
+0 mins.	1	0	0	0	1	0	0	0	0	0	0	1	0	0	1	0	0	1	0	1
+15 mins.	0	0	0	0	0	0	0	0	0	0	0	0	0	0	0	0	0	0	0	0
+30 mins.	0	0	0	0	0	0	0	0	0	0	0	1	0	0	1	0	0	0	0	0
+45 mins.	0	0	0	0	0	0	0	0	0	0	0	0	0	0	0	0	0	0	0	0
Total Volume	1	0	0	0	1	0	0	0	0	0	0	2	0	0	2	0	0	1	0	1
% App. Total	100	0	0	0		0	0	0	0		0	100	0	0		0	0	100	0	
PHF	.250	.000	.000	.000	.250	.000	.000	.000	.000	.000	.000	.500	.000	.000	.500	.000	.000	.250	.000	.250

Counts Unlimited Inc.
25286 Jaclyn Avenue
Moreno Valley, CA 92557
951-485-7934

City of Rancho Cucamonga
N/S: Vineyard Avenue
E/W: Arrow Route
Weather: Sunny

File Name : RNCVIARPM
Site Code : 9150075
Start Date : 5/28/2009
Page No : 1

Groups Printed- 4+ Axle Trucks

	Vineyard Avenue Southbound					Arrow Route Westbound					Vineyard Avenue Northbound					Arrow Route Eastbound					
Start Time	Left	Thru	Right	RoR	App. Total	Left	Thru	Right	RoR	App. Total	Left	Thru	Right	RoR	App. Total	Left	Thru	Right	RoR	App. Total	Int. Total
04:00 PM	0	0	0	0	0	0	0	0	0	0	0	1	0	0	1	0	0	0	0	0	1
04:15 PM	0	0	0	0	0	1	0	0	0	1	0	1	0	0	1	0	0	0	0	0	2
04:30 PM	0	0	0	0	0	0	0	0	0	0	0	1	0	0	1	0	0	0	0	0	1
04:45 PM	0	1	0	0	1	1	0	0	0	1	0	0	0	0	0	0	0	0	0	0	2
Total	0	1	0	0	1	2	0	0	0	2	0	3	0	0	3	0	0	0	0	0	6
05:00 PM	0	0	0	0	0	0	0	0	0	0	0	3	0	0	3	0	0	0	0	0	3
05:15 PM	0	0	0	0	0	0	0	0	0	0	0	0	0	0	0	0	0	0	0	0	0
05:30 PM	0	0	0	0	0	1	0	0	0	1	0	1	0	0	1	0	0	0	0	0	2
05:45 PM	0	0	0	0	0	0	0	0	0	0	0	0	0	0	0	0	0	0	0	0	0
Total	0	0	0	0	0	1	0	0	0	1	0	4	0	0	4	0	0	0	0	0	5
Grand Total	0	1	0	0	1	3	0	0	0	3	0	7	0	0	7	0	0	0	0	0	11
Apprch %	0	100	0	0		100	0	0	0		0	100	0	0		0	0	0	0		
Total %	0	9.1	0	0	9.1	27.3	0	0	0	27.3	0	63.6	0	0	63.6	0	0	0	0	0	

	Vineyard Avenue Southbound					Arrow Route Westbound					Vineyard Avenue Northbound					Arrow Route Eastbound					
Start Time	Left	Thru	Right	RoR	App. Total		Thru	Right	RoR	App. Total		Thru	Right	RoR	App. Total		Thru	Right	RoR	App. Total	Int. Total
Peak Hour Analysis From 05:00 PM to 05:45 PM - Peak 1 of 1																					
Peak Hour for Entire Intersection Begins at 05:00 PM																					
05:00 PM	0	0	0	0	0	0	0	0	0	0	0	3	0	0	3	0	0	0	0	0	3
05:15 PM	0	0	0	0	0	0	0	0	0	0	0	0	0	0	0	0	0	0	0	0	0
05:30 PM	0	0	0	0	0	1	0	0	0	1	0	1	0	0	1	0	0	0	0	0	2
05:45 PM	0	0	0	0	0	0	0	0	0	0	0	0	0	0	0	0	0	0	0	0	0
Total Volume	0	0	0	0	0	1	0	0	0	1	0	4	0	0	4	0	0	0	0	0	5
% App. Total	0	0	0	0		100	0	0	0		0	100	0	0		0	0	0	0		
PHF	.000	.000	.000	.000	.000	.250	.000	.000	.000	.250	.000	.333	.000	.000	.333	.000	.000	.000	.000	.000	.417

Counts Unlimited Inc.
25286 Jaclyn Avenue
Moreno Valley, CA 92557
951-485-7934

City of Rancho Cucamonga
N/S: Vineyard Avenue
E/W: Arrow Route
Weather: Sunny

File Name : RNCVIARPM
Site Code : 9150075
Start Date : 5/28/2009
Page No : 2

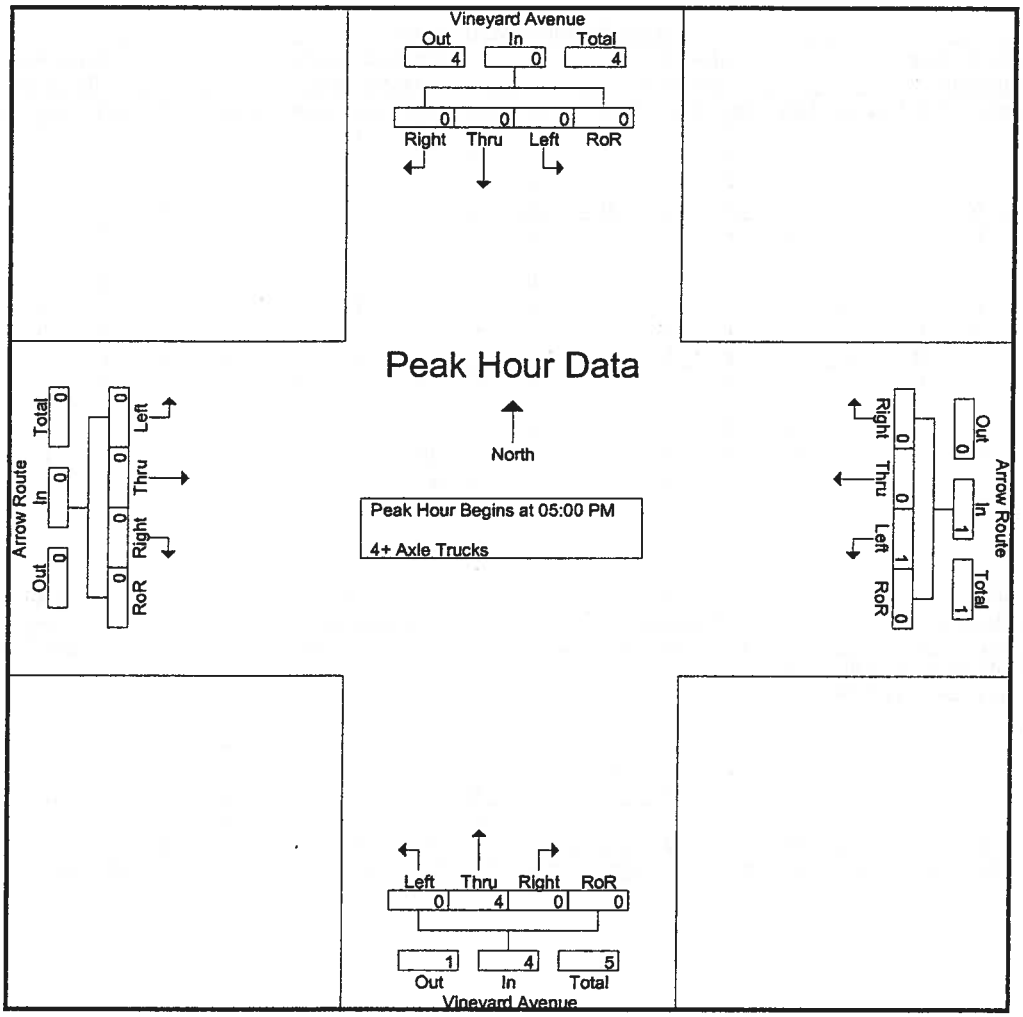

Peak Hour Analysis From 05:00 PM to 05:45 PM - Peak 1 of 1

Peak Hour for Each Approach Begins at:

	05:00 PM					05:00 PM					05:00 PM					05:00 PM				
+0 mins.	0	0	0	0	0	0	0	0	0	0	0	3	0	0	3	0	0	0	0	0
+15 mins.	0	0	0	0	0	0	0	0	0	0	0	0	0	0	0	0	0	0	0	0
+30 mins.	0	0	0	0	0	1	0	0	0	1	0	1	0	0	1	0	0	0	0	0
+45 mins.	0	0	0	0	0	0	0	0	0	0	0	0	0	0	0	0	0	0	0	0
Total Volume	0	0	0	0	0	1	0	0	0	1	0	4	0	0	4	0	0	0	0	0
% App. Total	0	0	0	0		100	0	0	0		0	100	0	0		0	0	0	0	
PHF	.000	.000	.000	.000	.000	.250	.000	.000	.000	.250	.000	.333	.000	.000	.333	.000	.000	.000	.000	.000

PASSENGER CAR EQUIVALENCY PEAK HOUR COUNT SUMMARY

INTERSECTION 7
Archibald Avenue (NS) / 19th Street / SR-30 (EW)

AM PEAK HOUR

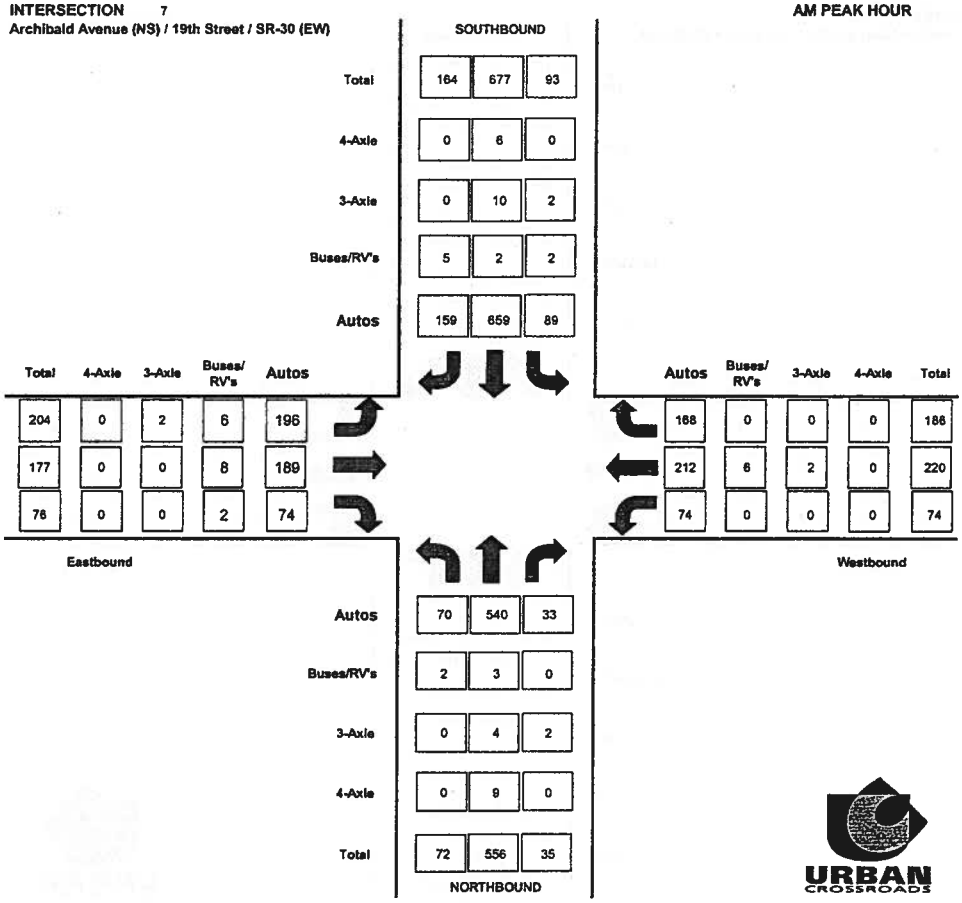

INTERSECTION 7
Archibald Avenue (NS) / 19th Street / SR-30 (EW)

PM PEAK HOUR

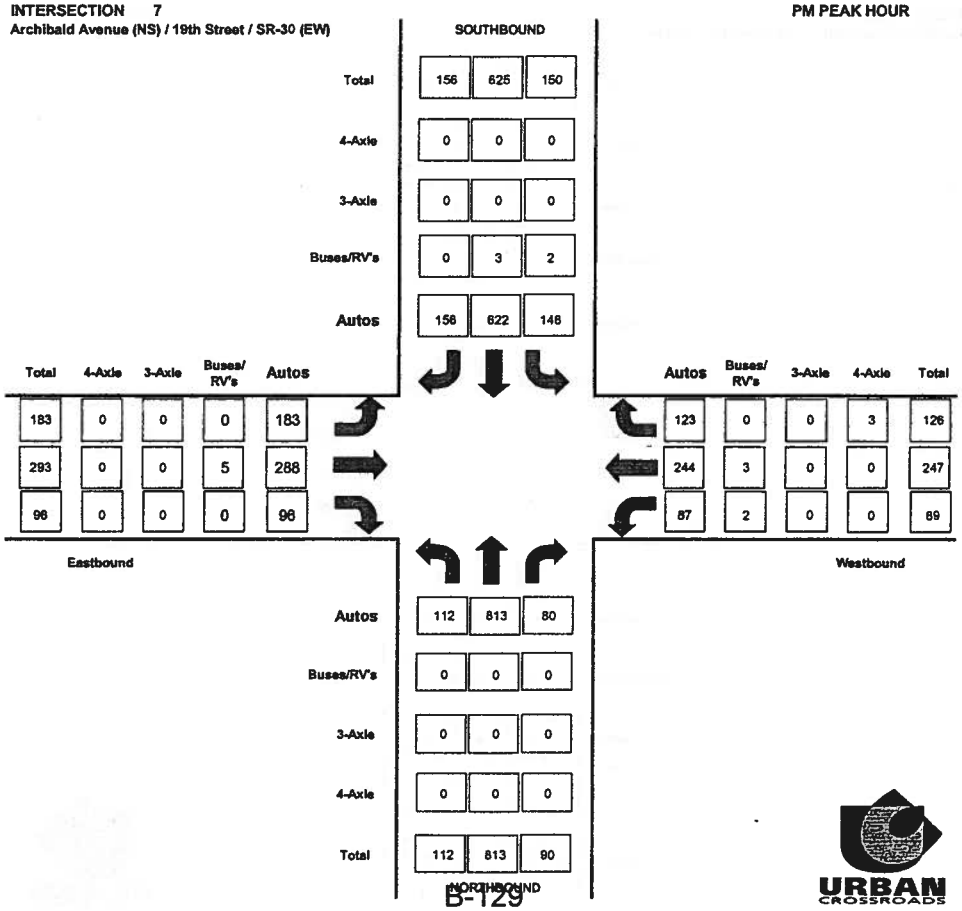

RAW PEAK HOUR COUNT SUMMARY

INTERSECTION 7
Archibald Avenue (NS) / 19th Street / SR-30 (EW)

AM PEAK HOUR

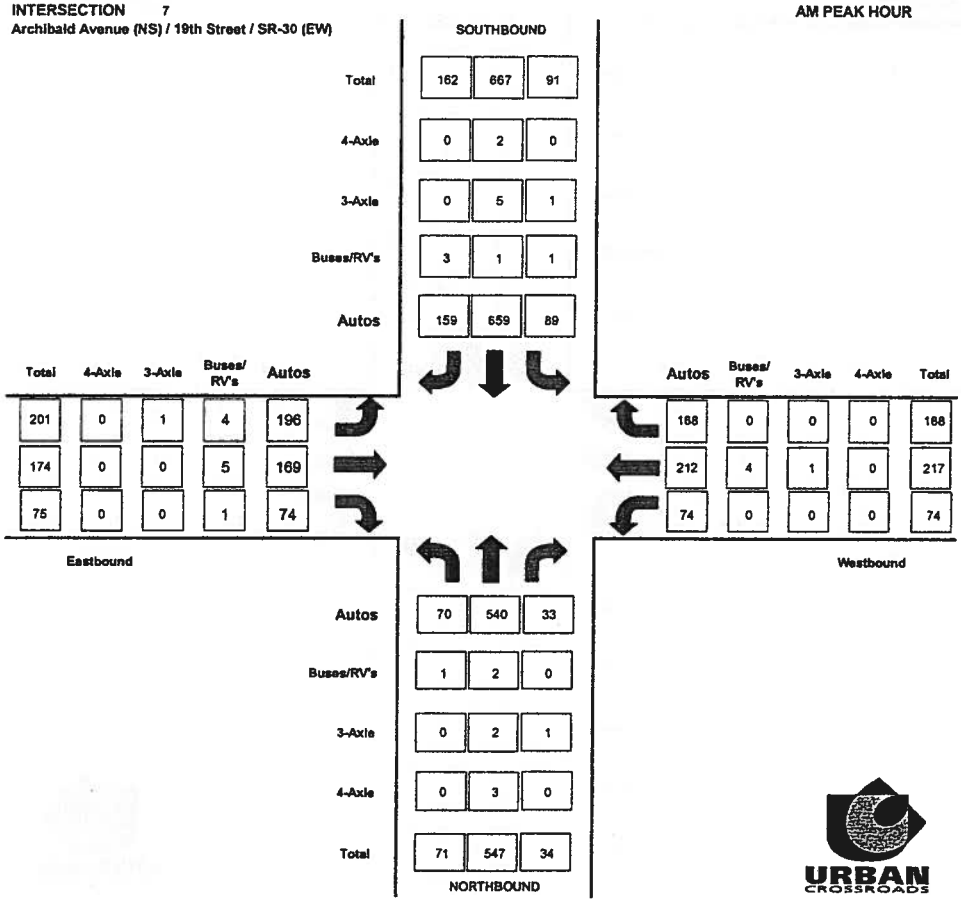

INTERSECTION 7
Archibald Avenue (NS) / 19th Street / SR-30 (EW)

PM PEAK HOUR

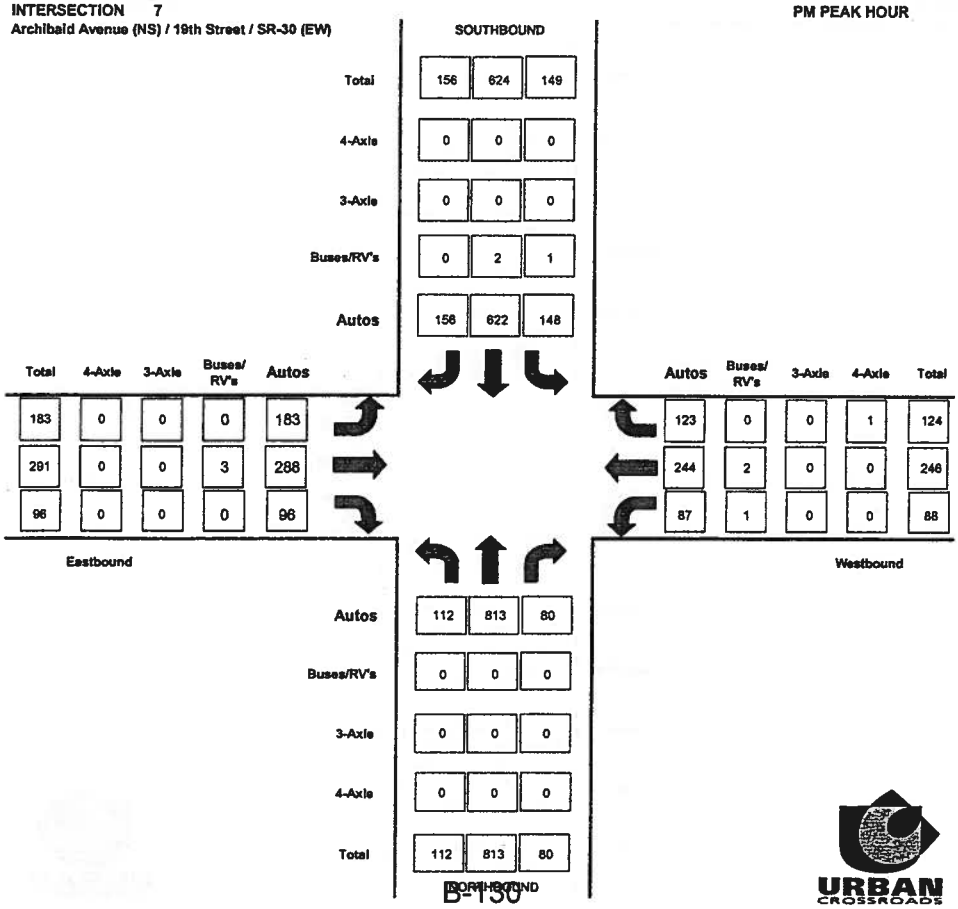

Counts Unlimited Inc.
25286 Jaclyn Avenue
Moreno Valley, CA 92557
951-485-7934

7

City of Rancho Cucamonga
N/S: Archibald Avenue
E/W: 19th Street/SR-30
Weather: Sunny

File Name : RNCAR19AM
Site Code : 9150115
Start Date : 5/27/2009
Page No : 1

Groups Printed- Passenger Vehicles - Large 2 Axle Vehicles - 3 Axle Vehicles - 4+ Axle Trucks

	Archibald Avenue Southbound					19th Street/SR-30 Westbound					Archibald Avenue Northbound					19th Street/SR-30 Eastbound					
Start Time	Left	Thru	Right	RoR	App. Total	Left	Thru	Right	RoR	App. Total	Left	Thru	Right	RoR	App. Total	Left	Thru	Right	RoR	App. Total	Int. Total
07:00 AM	17	121	20	21	179	7	36	17	21	81	9	122	3	2	136	43	17	7	3	70	466
07:15 AM	24	174	22	23	243	15	55	23	17	110	13	148	2	5	168	40	30	9	1	80	601
07:30 AM	25	194	27	32	278	15	55	25	18	113	19	166	3	6	194	53	28	14	5	100	685
07:45 AM	19	148	15	14	196	26	56	24	14	120	21	139	10	0	170	63	54	15	5	137	623
Total	85	637	84	90	896	63	202	89	70	424	62	575	18	13	668	199	129	45	14	387	2375
08:00 AM	23	151	22	7	203	18	51	31	16	116	18	94	3	5	120	45	62	18	8	133	572
08:15 AM	17	122	15	14	168	21	55	30	21	127	12	123	5	1	141	23	43	8	11	85	521
08:30 AM	21	144	11	14	190	12	50	18	13	93	11	108	3	0	122	28	39	9	4	80	485
08:45 AM	7	154	18	12	191	16	31	26	9	82	12	124	1	1	138	31	40	9	9	89	500
Total	68	571	66	47	752	67	187	105	59	418	53	449	12	7	521	127	184	44	32	387	2078
Grand Total	153	1208	150	137	1648	130	389	194	129	842	115	1024	30	20	1189	326	313	89	46	774	4453
Apprch %	9.3	73.3	9.1	8.3		15.4	46.2	23	15.3		9.7	86.1	2.5	1.7		42.1	40.4	11.5	5.9		
Total %	3.4	27.1	3.4	3.1	37	2.9	8.7	4.4	2.9	18.9	2.6	23	0.7	0.4	26.7	7.3	7	2	1	17.4	
Passenger Vehicles		1191										1008									
% Passenger Vehicles	98	98.6	98.7	99.3	98.6	100	97.9	98.5	99.2	98.6	99.1	98.4	93.3	100	98.4	98.5	97.8	98.9	100	98.3	98.5
Large 2 Axle Vehicles																					
% Large 2 Axle Vehicles	1.3	0.5	1.3	0.7	0.7	0	1.5	0.5	0.8	1	0.9	0.6	0	0	0.6	1.2	2.2	1.1	0	1.6	0.9
3 Axle Vehicles	1	9	0	0	10	0	2	0	0	2	0	4	2	0	6	1	0	0	0	1	19
% 3 Axle Vehicles	0.7	0.7	0	0	0.6	0	0.5	0	0	0.2	0	0.4	6.7	0	0.5	0.3	0	0	0	0.1	0.4
4+ Axle Trucks	0	2	0	0	2	0	0	2	0	2	0	6	0	0	6	0	0	0	0	0	10
% 4+ Axle Trucks																					

	Archibald Avenue Southbound					19th Street/SR-30 Westbound					Archibald Avenue Northbound					19th Street/SR-30 Eastbound					
Start Time	Left	Thru	Right	RoR	App. Total	Left	Thru	Right	RoR	App. Total	Left	Thru	Right	RoR	App. Total	Left	Thru	Right	RoR	App. Total	Int. Total
Peak Hour Analysis From 07:15 AM to 08:00 AM - Peak 1 of 1																					
Peak Hour for Entire Intersection Begins at 07:15 AM																					
07:15 AM	24	174	22	23	243	15	55	23	17	110	13	148	2	5	168	40	30	9	1	80	601
07:30 AM	**25**	**194**	**27**	**32**	**278**	15	55	25	**18**	113	19	**166**	3	**6**	**194**	53	28	14	5	100	**685**
07:45 AM	19	148	15	14	196	**26**	**56**	24	14	**120**	**21**	139	**10**	0	170	**63**	54	15	5	**137**	623
08:00 AM	23	151	22	7	203	18	51	**31**	16	116	18	94	3	5	120	45	**62**	**18**	**8**	133	572
Total Volume	91	667	86	76	920	74	217	103	65	459	71	547	18	16	652	201	174	56	19	450	2481
% App. Total	9.9	72.5	9.3	8.3		16.1	47.3	22.4	14.2		10.9	83.9	2.8	2.5		44.7	38.7	12.4	4.2		
PHF	.910	.860	.796	.594	.827	.712	.969	.831	.903	.956	.845	.824	.450	.667	.840	.798	.702	.778	.594	.821	.905

Counts Unlimited Inc.
25286 Jaclyn Avenue
Moreno Valley, CA 92557
951-485-7934

City of Rancho Cucamonga
N/S: Archibald Avenue
E/W: 19th Street/SR-30
Weather: Sunny

File Name : RNCAR19AM
Site Code : 9150115
Start Date : 5/27/2009
Page No : 2

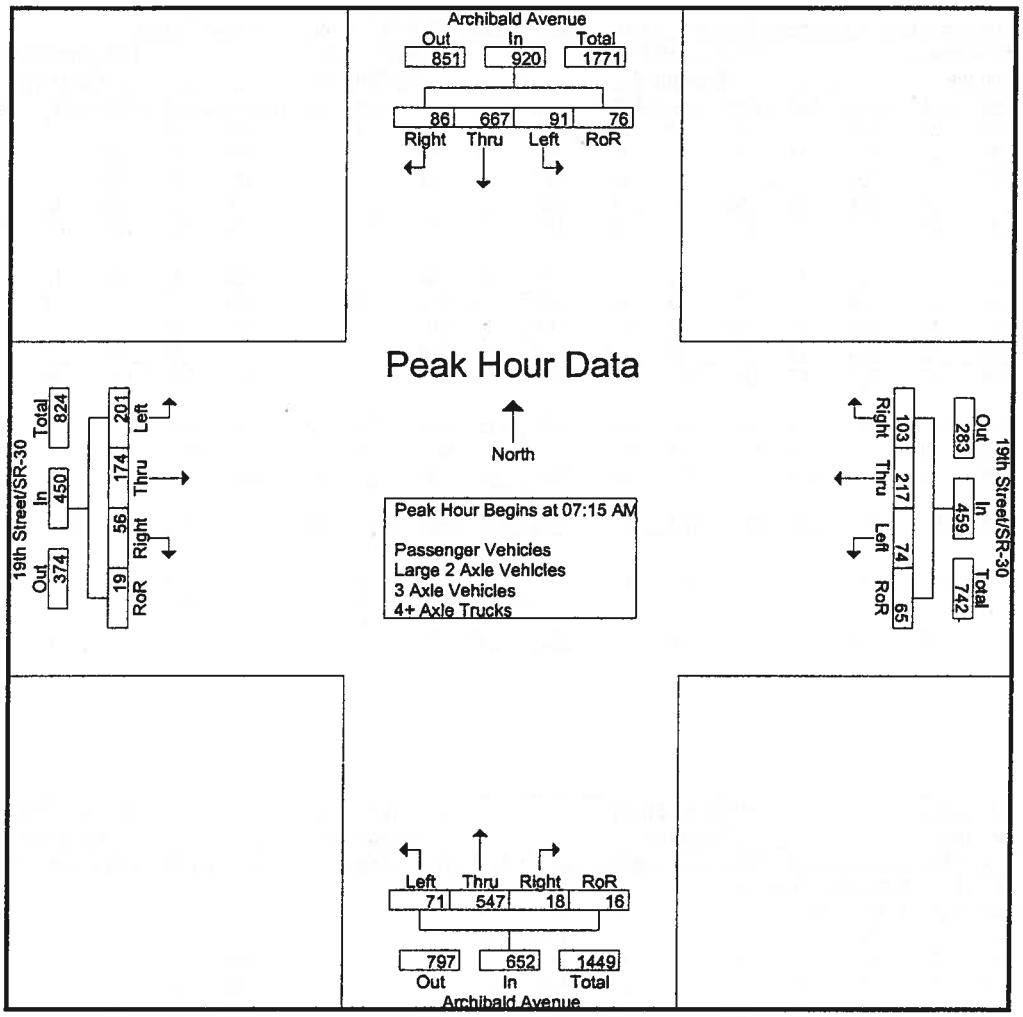

Peak Hour Analysis From 07:15 AM to 08:00 AM - Peak 1 of 1

Peak Hour for Each Approach Begins at:

	07:15 AM					07:15 AM					07:15 AM					07:15 AM				
+0 mins.	24	174	22	23	243	15	55	23	17	110	13	148	2	5	168	40	30	9	1	80
+15 mins.	**25**	**194**	**27**	**32**	**278**	15	55	25	**18**	113	19	**166**	3	**6**	**194**	53	28	14	5	100
+30 mins.	19	148	15	14	196	**26**	**56**	24	14	**120**	**21**	139	**10**	0	170	**63**	54	15	5	**137**
+45 mins.	23	151	22	7	203	18	51	**31**	16	116	18	94	3	5	120	45	**62**	**18**	**8**	133
Total Volume	91	667	86	76	920	74	217	103	65	459	71	547	18	16	652	201	174	56	19	450
% App. Total	9.9	72.5	9.3	8.3		16.1	47.3	22.4	14.2		10.9	83.9	2.8	2.5		44.7	38.7	12.4	4.2	
PHF	.910	.860	.796	.594	.827	.712	.969	.831	.903	.956	.845	.824	.450	.667	.840	.798	.702	.778	.594	.821

Counts Unlimited Inc.
25286 Jaclyn Avenue
Moreno Valley, CA 92557
951-485-7934

City of Rancho Cucamonga
N/S: Archibald Avenue
E/W: 19th Street/SR-30
Weather: Sunny

File Name : RNCAR19AM
Site Code : 9150115
Start Date : 5/27/2009
Page No : 1

Groups Printed- Passenger Vehicles

	Archibald Avenue Southbound					19th Street/SR-30 Westbound					Archibald Avenue Northbound					19th Street/SR-30 Eastbound					
Start Time	Left	Thru	Right	RoR	App. Total	Left	Thru	Right	RoR	App. Total	Left	Thru	Right	RoR	App. Total	Left	Thru	Right	RoR	App. Total	Int. Total
07:00 AM	17	120	20	21	178	7	34	17	21	79	9	117	3	2	131	43	17	7	3	70	458
07:15 AM	23	173	22	23	241	15	55	23	17	110	12	145	2	5	164	38	29	9	1	77	592
07:30 AM	25	191	27	31	274	15	53	25	18	111	19	166	3	6	194	52	28	14	5	99	678
07:45 AM	18	144	15	14	191	26	55	24	14	119	21	137	9	0	167	61	51	14	5	131	608
Total	83	628	84	89	884	63	197	89	70	419	61	565	17	13	656	194	125	44	14	377	2336
08:00 AM	23	151	20	7	201	18	49	31	16	114	18	92	3	5	118	45	61	18	8	132	565
08:15 AM	17	121	15	14	167	21	54	30	21	126	12	120	4	1	137	23	43	8	11	85	515
08:30 AM	20	140	11	14	185	12	50	17	12	91	11	107	3	0	121	28	38	9	4	79	476
08:45 AM	7	151	18	12	188	16	31	24	9	80	12	124	1	1	138	31	39	9	9	88	494
Total	67	563	64	47	741	67	184	102	58	411	53	443	11	7	514	127	181	44	32	384	2050
Grand Total	150	1191	148	136	1625	130	381	191	128	830	114	1008	28	20	1170	321	306	88	46	761	4386
Apprch %	9.2	73.3	9.1	8.4		15.7	45.9	23	15.4		9.7	86.2	2.4	1.7		42.2	40.2	11.6	6		
Total %	3.4	27.2	3.4	3.1	37	3	8.7	4.4	2.9	18.9	2.6	23	0.6	0.5	26.7	7.3	7	2	1	17.4	

	Archibald Avenue Southbound					19th Street/SR-30 Westbound					Archibald Avenue Northbound					19th Street/SR-30 Eastbound					
Start Time	Left	Thru	Right	RoR	App. Total		Thru	Right	RoR	App. Total		Thru	Right	RoR	App. Total		Thru	Right	RoR	App. Total	Int. Total
Peak Hour Analysis From 07:15 AM to 08:15 AM - Peak 1 of 1																					
Peak Hour for Entire Intersection Begins at 07:15 AM																					
07:15 AM	23	173	22	23	241	15	**55**	23	17	110	12	145	2	5	164	38	29	9	1	77	592
07:30 AM	**25**	**191**	**27**	**31**	**274**	15	53	25	**18**	111	19	**166**	3	6	**194**	52	28	14	5	99	**678**
07:45 AM	18	144	15	14	191	**26**	55	24	14	**119**	**21**	137	**9**	0	167	61	51	14	5	131	608
08:00 AM	23	151	20	7	201	18	49	**31**	16	114	18	92	3	5	118	45	**61**	**18**	**8**	**132**	565
Total Volume	89	659	84	75	907	74	212	103	65	454	70	540	17	16	643	196	169	55	19	439	2443
% App. Total	9.8	72.7	9.3	8.3		16.3	46.7	22.7	14.3		10.9	84	2.6	2.5		44.6	38.5	12.5	4.3		
PHF	.890	.863	.778	.605	.828	.712	.964	.831	.903	.954	.833	.813	.472	.667	.829	.803	.693	.764	.594	.831	.901

Counts Unlimited Inc.
25286 Jaclyn Avenue
Moreno Valley, CA 92557
951-485-7934

City of Rancho Cucamonga
N/S: Archibald Avenue
E/W: 19th Street/SR-30
Weather: Sunny

File Name : RNCAR19AM
Site Code : 9150115
Start Date : 5/27/2009
Page No : 2

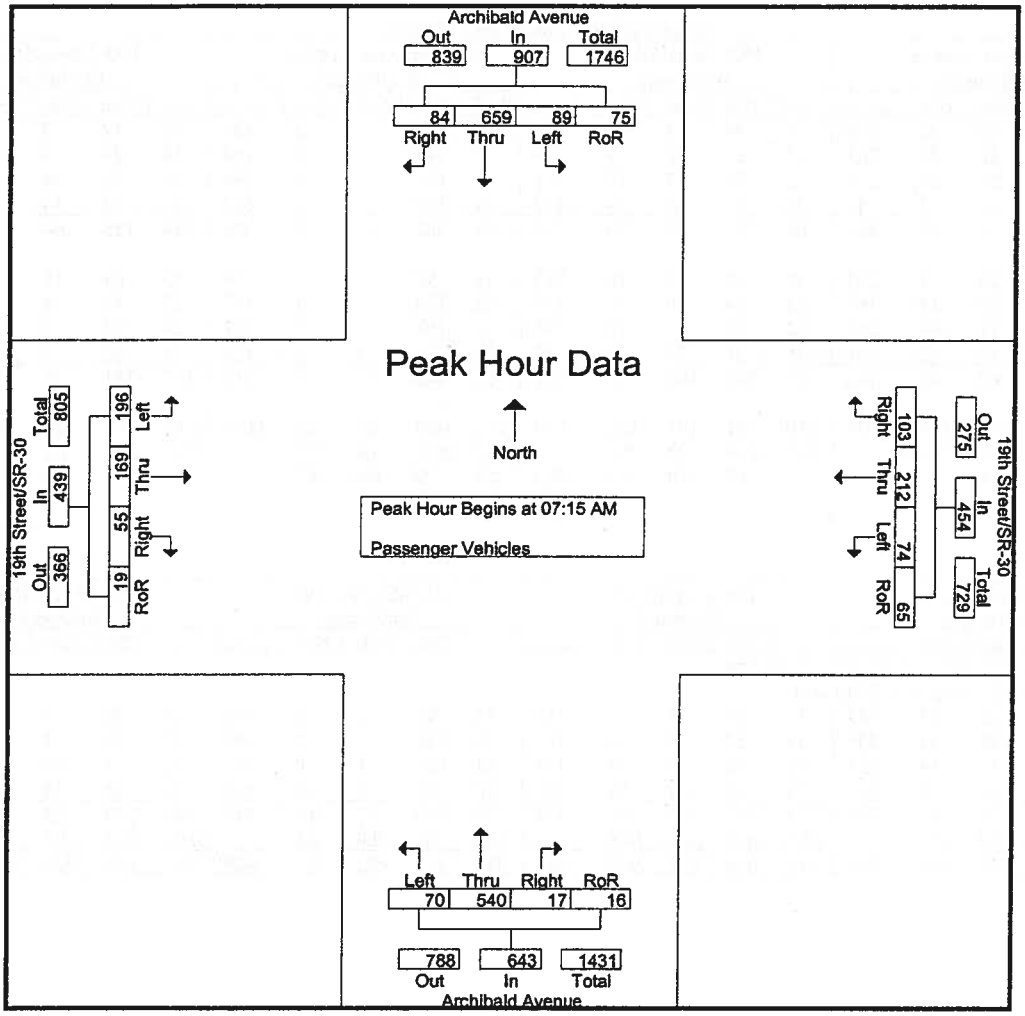

Peak Hour Analysis From 07:15 AM to 08:15 AM - Peak 1 of 1

Peak Hour for Each Approach Begins at:

	07:15 AM					07:30 AM					07:15 AM					07:30 AM				
+0 mins.	23	173	22	23	241	15	53	25	18	111	12	145	2	5	164	52	28	14	5	99
+15 mins.	**25**	**191**	**27**	**31**	**274**	**26**	**55**	24	14	119	19	**166**	3	**6**	**194**	**61**	51	14	5	131
+30 mins.	18	144	15	14	191	18	49	**31**	16	114	**21**	137	**9**	0	167	45	**61**	**18**	8	**132**
+45 mins.	23	151	20	7	201	21	54	30	**21**	**126**	18	92	3	5	118	23	43	8	**11**	85
Total Volume	89	659	84	75	907	80	211	110	69	470	70	540	17	16	643	181	183	54	29	447
% App. Total	9.8	72.7	9.3	8.3		17	44.9	23.4	14.7		10.9	84	2.6	2.5		40.5	40.9	12.1	6.5	
PHF	.890	.863	.778	.605	.828	.769	.959	.887	.821	.933	.833	.813	.472	.667	.829	.742	.750	.750	.659	.847

Counts Unlimited Inc.
25286 Jaclyn Avenue
Moreno Valley, CA 92557
951-485-7934

City of Rancho Cucamonga
N/S: Archibald Avenue
E/W: 19th Street/SR-30
Weather: Sunny

File Name : RNCAR19AM
Site Code : 9150115
Start Date : 5/27/2009
Page No : 1

Groups Printed- Large 2 Axle Vehicles

	Archibald Avenue Southbound					19th Street/SR-30 Westbound					Archibald Avenue Northbound					19th Street/SR-30 Eastbound					
Start Time	Left	Thru	Right	RoR	App. Total	Left	Thru	Right	RoR	App. Total	Left	Thru	Right	RoR	App. Total	Left	Thru	Right	RoR	App. Total	Int. Total
07:00 AM	0	0	0	0	0	0	1	0	0	1	0	3	0	0	3	0	0	0	0	0	4
07:15 AM	1	0	0	0	1	0	0	0	0	0	1	2	0	0	3	2	1	0	0	3	7
07:30 AM	0	1	0	1	2	0	2	0	0	2	0	0	0	0	0	0	0	0	0	0	4
07:45 AM	0	0	0	0	0	0	0	0	0	0	0	0	0	0	0	2	3	1	0	6	6
Total	1	1	0	1	3	0	3	0	0	3	1	5	0	0	6	4	4	1	0	9	21
08:00 AM	0	0	2	0	2	0	2	0	0	2	0	0	0	0	0	0	1	0	0	1	5
08:15 AM	0	1	0	0	1	0	1	0	0	1	0	1	0	0	1	0	0	0	0	0	3
08:30 AM	1	3	0	0	4	0	0	0	1	1	0	0	0	0	0	0	1	0	0	1	6
08:45 AM	0	1	0	0	1	0	0	1	0	1	0	0	0	0	0	0	1	0	0	1	3
Total	1	5	2	0	8	0	3	1	1	5	0	1	0	0	1	0	3	0	0	3	17
Grand Total	2	6	2	1	11	0	6	1	1	8	1	6	0	0	7	4	7	1	0	12	38
Apprch %	18.2	54.5	18.2	9.1		0	75	12.5	12.5		14.3	85.7	0	0		33.3	58.3	8.3	0		
Total %	5.3	15.8	5.3	2.6	28.9	0	15.8	2.6	2.6	21.1	2.6	15.8	0	0	18.4	10.5	18.4	2.6	0	31.6	

	Archibald Avenue Southbound					19th Street/SR-30 Westbound					Archibald Avenue Northbound					19th Street/SR-30 Eastbound					
Start Time	Left	Thru	Right	RoR	App. Total		Thru	Right	RoR	App. Total		Thru	Right	RoR	App. Total		Thru	Right	RoR	App. Total	Int. Total
Peak Hour Analysis From 07:15 AM to 08:15 AM - Peak 1 of 1																					
Peak Hour for Entire Intersection Begins at 07:15 AM																					
07:15 AM	1	0	0	0	1	0	0	0	0	0	1	2	0	0	3	2	1	0	0	3	7
07:30 AM	0	1	0	1	2	0	2	0	0	2	0	0	0	0	0	0	0	0	0	0	4
07:45 AM	0	0	0	0	0	0	0	0	0	0	0	0	0	0	0	2	3	1	0	6	6
08:00 AM	0	0	2	0	2	0	2	0	0	2	0	0	0	0	0	0	1	0	0	1	5
Total Volume	1	1	2	1	5	0	4	0	0	4	1	2	0	0	3	4	5	1	0	10	22
% App. Total	20	20	40	20		0	100	0	0		33.3	66.7	0	0		40	50	10	0		
PHF	.250	.250	.250	.250	.625	.000	.500	.000	.000	.500	.250	.250	.000	.000	.250	.500	.417	.250	.000	.417	.786

Counts Unlimited Inc.
25286 Jaclyn Avenue
Moreno Valley, CA 92557
951-485-7934

City of Rancho Cucamonga
N/S: Archibald Avenue
E/W: 19th Street/SR-30
Weather: Sunny

File Name : RNCAR19AM
Site Code : 9150115
Start Date : 5/27/2009
Page No : 2

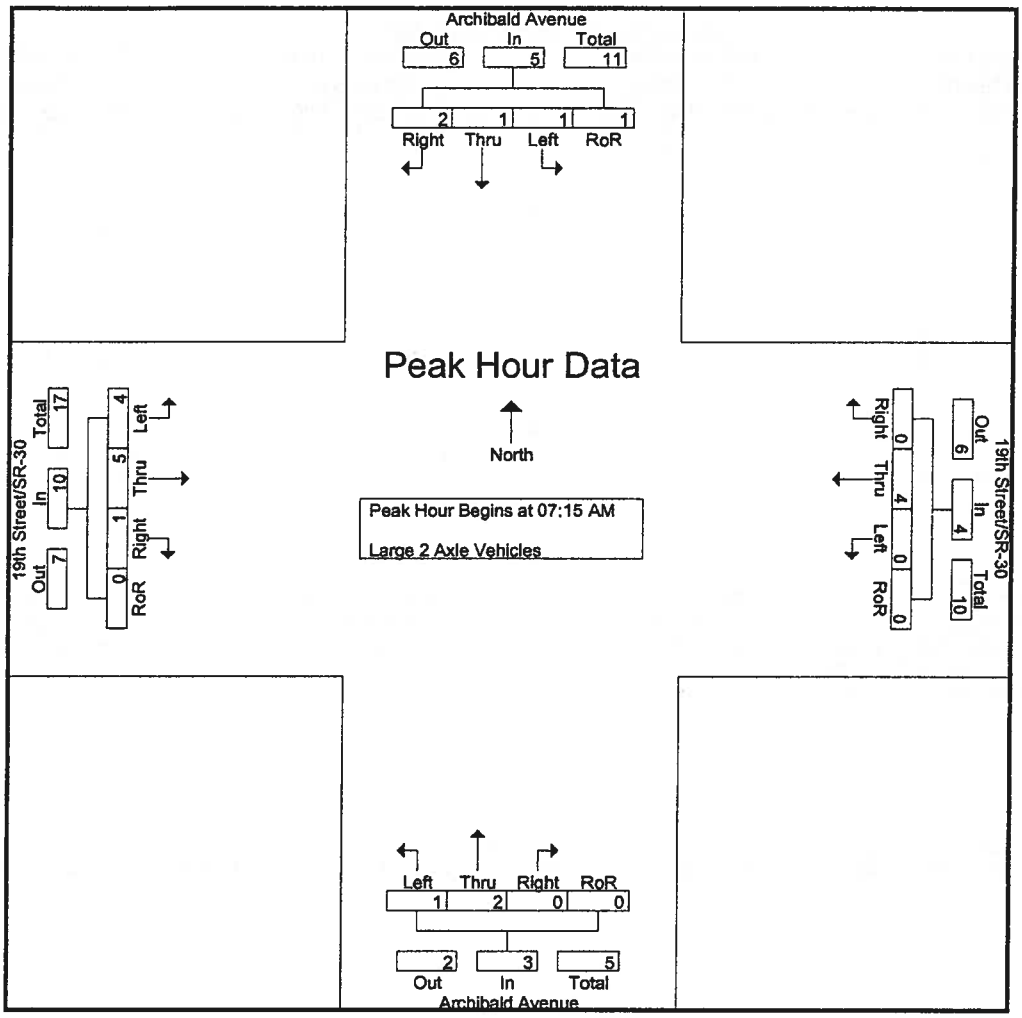

Peak Hour Analysis From 07:15 AM to 08:15 AM - Peak 1 of 1

Peak Hour for Each Approach Begins at:

	07:15 AM					07:30 AM					07:15 AM					07:15 AM				
+0 mins.	1	0	0	0	1	0	2	0	0	2	1	2	0	0	3	2	1	0	0	3
+15 mins.	0	1	0	1	2	0	0	0	0	0	0	0	0	0	0	0	0	0	0	0
+30 mins.	0	0	0	0	0	0	2	0	0	2	0	0	0	0	0	2	3	1	0	6
+45 mins.	0	0	2	0	2	0	1	0	0	1	0	0	0	0	0	0	1	0	0	1
Total Volume	1	1	2	1	5	0	5	0	0	5	1	2	0	0	3	4	5	1	0	10
% App. Total	20	20	40	20		0	100	0	0		33.3	66.7	0	0		40	50	10	0	
PHF	.250	.250	.250	.250	.625	.000	.625	.000	.000	.625	.250	.250	.000	.000	.250	.500	.417	.250	.000	.417

Counts Unlimited Inc.
25286 Jaclyn Avenue
Moreno Valley, CA 92557
951-485-7934

City of Rancho Cucamonga
N/S: Archibald Avenue
E/W: 19th Street/SR-30
Weather: Sunny

File Name : RNCAR19AM
Site Code : 9150115
Start Date : 5/27/2009
Page No : 1

Groups Printed- 3 Axle Vehicles

	Archibald Avenue Southbound					19th Street/SR-30 Westbound					Archibald Avenue Northbound					19th Street/SR-30 Eastbound					
Start Time	Left	Thru	Right	RoR	App. Total	Left	Thru	Right	RoR	App. Total	Left	Thru	Right	RoR	App. Total	Left	Thru	Right	RoR	App. Total	Int. Total
07:00 AM	0	1	0	0	1	0	1	0	0	1	0	0	0	0	0	0	0	0	0	0	2
07:15 AM	0	1	0	0	1	0	0	0	0	0	0	1	0	0	1	0	0	0	0	0	2
07:30 AM	0	2	0	0	2	0	0	0	0	0	0	0	0	0	0	1	0	0	0	1	3
07:45 AM	1	2	0	0	3	0	1	0	0	1	0	1	1	0	2	0	0	0	0	0	6
Total	1	6	0	0	7	0	2	0	0	2	0	2	1	0	3	1	0	0	0	1	13
08:00 AM	0	0	0	0	0	0	0	0	0	0	0	0	0	0	0	0	0	0	0	0	0
08:15 AM	0	0	0	0	0	0	0	0	0	0	0	1	1	0	2	0	0	0	0	0	2
08:30 AM	0	1	0	0	1	0	0	0	0	0	0	1	0	0	1	0	0	0	0	0	2
08:45 AM	0	2	0	0	2	0	0	0	0	0	0	0	0	0	0	0	0	0	0	0	2
Total	0	3	0	0	3	0	0	0	0	0	0	2	1	0	3	0	0	0	0	0	6
Grand Total	1	9	0	0	10	0	2	0	0	2	0	4	2	0	6	1	0	0	0	1	19
Apprch %	10	90	0	0		0	100	0	0		0	66.7	33.3	0		100	0	0	0		
Total %	5.3	47.4	0	0	52.6	0	10.5	0	0	10.5	0	21.1	10.5	0	31.6	5.3	0	0	0	5.3	

	Archibald Avenue Southbound					19th Street/SR-30 Westbound					Archibald Avenue Northbound					19th Street/SR-30 Eastbound					
Start Time	Left	Thru	Right	RoR	App. Total		Thru	Right	RoR	App. Total		Thru	Right	RoR	App. Total		Thru	Right	RoR	App. Total	Int. Total
Peak Hour Analysis From 07:15 AM to 08:15 AM - Peak 1 of 1																					
Peak Hour for Entire Intersection Begins at 07:15 AM																					
07:15 AM	0	1	0	0	1	0	0	0	0	0	0	1	0	0	1	0	0	0	0	0	2
07:30 AM	0	2	0	0	2	0	0	0	0	0	0	0	0	0	0	1	0	0	0	1	3
07:45 AM	1	2	0	0	3	0	1	0	0	1	0	1	1	0	2	0	0	0	0	0	6
08:00 AM	0	0	0	0	0	0	0	0	0	0	0	0	0	0	0	0	0	0	0	0	0
Total Volume	1	5	0	0	6	0	1	0	0	1	0	2	1	0	3	1	0	0	0	1	11
% App. Total	16.7	83.3	0	0		0	100	0	0		0	66.7	33.3	0		100	0	0	0		
PHF	.250	.625	.000	.000	.500	.000	.250	.000	.000	.250	.000	.500	.250	.000	.375	.250	.000	.000	.000	.250	.458

Counts Unlimited Inc.
25286 Jaclyn Avenue
Moreno Valley, CA 92557
951-485-7934

City of Rancho Cucamonga
N/S: Archibald Avenue
E/W: 19th Street/SR-30
Weather: Sunny

File Name : RNCAR19AM
Site Code : 9150115
Start Date : 5/27/2009
Page No : 2

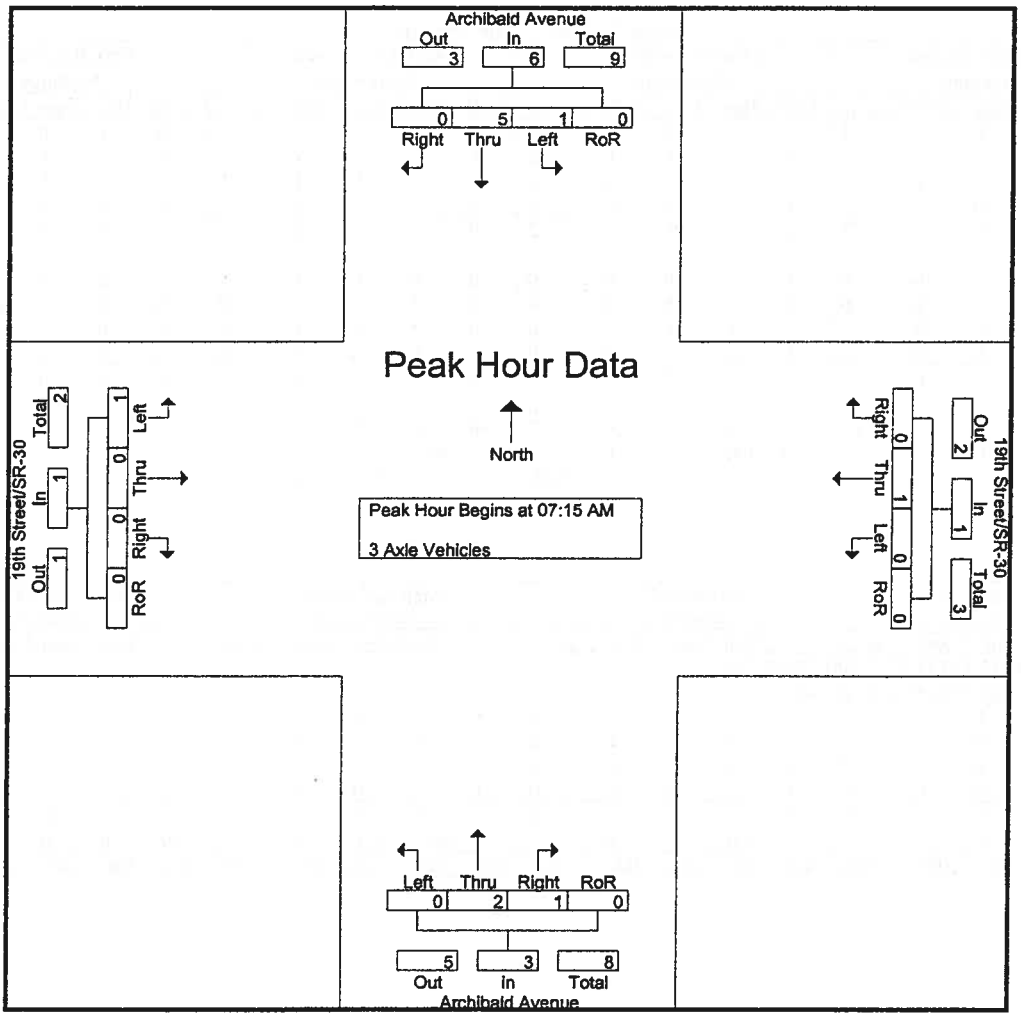

Peak Hour Analysis From 07:15 AM to 08:15 AM - Peak 1 of 1

Peak Hour for Each Approach Begins at:

	07:15 AM					07:15 AM					07:30 AM					07:15 AM				
+0 mins.	0	1	0	0	1	0	0	0	0	0	0	0	0	0	0	0	0	0	0	0
+15 mins.	0	2	0	0	2	0	0	0	0	0	0	1	1	0	2	1	0	0	0	1
+30 mins.	1	2	0	0	3	0	1	0	0	1	0	0	0	0	0	0	0	0	0	0
+45 mins.	0	0	0	0	0	0	0	0	0	0	0	1	1	0	2	0	0	0	0	0
Total Volume	1	5	0	0	6	0	1	0	0	1	0	2	2	0	4	1	0	0	0	1
% App. Total	16.7	83.3	0	0		0	100	0	0		0	50	50	0		100	0	0	0	
PHF	.250	.625	.000	.000	.500	.000	.250	.000	.000	.250	.000	.500	.500	.000	.500	.250	.000	.000	.000	.250

Counts Unlimited Inc.
25286 Jaclyn Avenue
Moreno Valley, CA 92557
951-485-7934

City of Rancho Cucamonga
N/S: Archibald Avenue
E/W: 19th Street/SR-30
Weather: Sunny

File Name : RNCAR19AM
Site Code : 9150115
Start Date : 5/27/2009
Page No : 1

Groups Printed- 4+ Axle Trucks

	Archibald Avenue Southbound					19th Street/SR-30 Westbound					Archibald Avenue Northbound					19th Street/SR-30 Eastbound					
Start Time	Left	Thru	Right	RoR	App. Total	Left	Thru	Right	RoR	App. Total	Left	Thru	Right	RoR	App. Total	Left	Thru	Right	RoR	App. Total	Int. Total
07:00 AM	0	0	0	0	0	0	0	0	0	0	0	2	0	0	2	0	0	0	0	0	2
07:15 AM	0	0	0	0	0	0	0	0	0	0	0	0	0	0	0	0	0	0	0	0	0
07:30 AM	0	0	0	0	0	0	0	0	0	0	0	0	0	0	0	0	0	0	0	0	0
07:45 AM	0	2	0	0	2	0	0	0	0	0	0	1	0	0	1	0	0	0	0	0	3
Total	0	2	0	0	2	0	0	0	0	0	0	3	0	0	3	0	0	0	0	0	5
08:00 AM	0	0	0	0	0	0	0	0	0	0	0	2	0	0	2	0	0	0	0	0	2
08:15 AM	0	0	0	0	0	0	0	0	0	0	0	1	0	0	1	0	0	0	0	0	1
08:30 AM	0	0	0	0	0	0	0	1	0	1	0	0	0	0	0	0	0	0	0	0	1
08:45 AM	0	0	0	0	0	0	0	1	0	1	0	0	0	0	0	0	0	0	0	0	1
Total	0	0	0	0	0	0	0	2	0	2	0	3	0	0	3	0	0	0	0	0	5
Grand Total	0	2	0	0	2	0	0	2	0	2	0	6	0	0	6	0	0	0	0	0	10
Apprch %	0	100	0	0		0	0	100	0		0	100	0	0		0	0	0	0		
Total %	0	20	0	0	20	0	0	20	0	20	0	60	0	0	60	0	0	0	0	0	

	Archibald Avenue Southbound					19th Street/SR-30 Westbound					Archibald Avenue Northbound					19th Street/SR-30 Eastbound					
Start Time	Left	Thru	Right	RoR	App. Total	Left	Thru	Right	RoR	App. Total	Left	Thru	Right	RoR	App. Total	Left	Thru	Right	RoR	App. Total	Int. Total
Peak Hour Analysis From 07:15 AM to 08:00 AM - Peak 1 of 1																					
Peak Hour for Entire Intersection Begins at 07:15 AM																					
07:15 AM	0	0	0	0	0	0	0	0	0	0	0	0	0	0	0	0	0	0	0	0	0
07:30 AM	0	0	0	0	0	0	0	0	0	0	0	0	0	0	0	0	0	0	0	0	0
07:45 AM	0	2	0	0	2	0	0	0	0	0	0	1	0	0	1	0	0	0	0	0	3
08:00 AM	0	0	0	0	0	0	0	0	0	0	0	2	0	0	2	0	0	0	0	0	2
Total Volume	0	2	0	0	2	0	0	0	0	0	0	3	0	0	3	0	0	0	0	0	5
% App. Total	0	100	0	0		0	0	0	0		0	100	0	0		0	0	0	0		
PHF	.000	.250	.000	.000	.250	.000	.000	.000	.000	.000	.000	.375	.000	.000	.375	.000	.000	.000	.000	.000	.417

Counts Unlimited Inc.
25286 Jaclyn Avenue
Moreno Valley, CA 92557
951-485-7934

City of Rancho Cucamonga
N/S: Archibald Avenue
E/W: 19th Street/SR-30
Weather: Sunny

File Name : RNCAR19AM
Site Code : 9150115
Start Date : 5/27/2009
Page No : 2

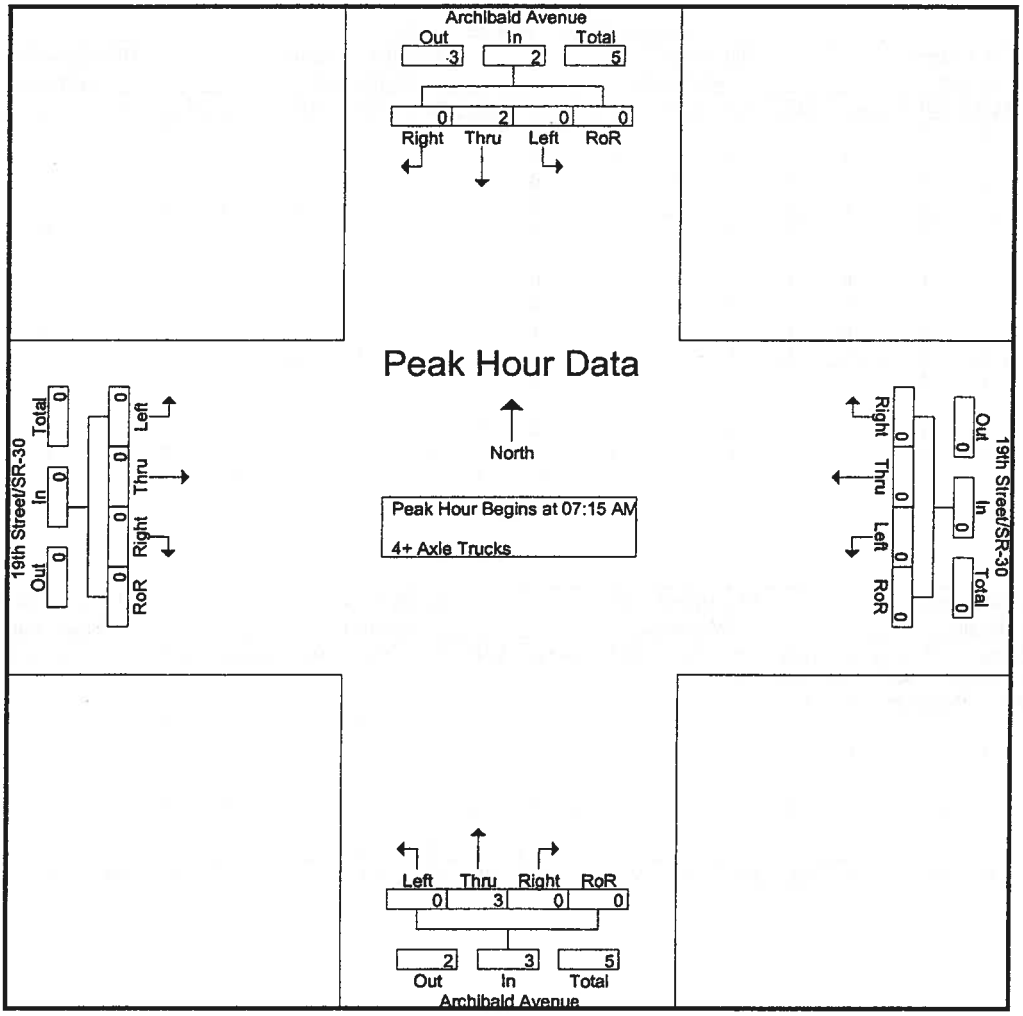

Peak Hour Analysis From 07:15 AM to 08:00 AM - Peak 1 of 1

Peak Hour for Each Approach Begins at:

	07:15 AM					07:15 AM					07:15 AM					07:15 AM				
+0 mins.	0	0	0	0	0	0	0	0	0	0	0	0	0	0	0	0	0	0	0	0
+15 mins.	0	0	0	0	0	0	0	0	0	0	0	0	0	0	0	0	0	0	0	0
+30 mins.	0	2	0	0	2	0	0	0	0	0	0	1	0	0	1	0	0	0	0	0
+45 mins.	0	0	0	0	0	0	0	0	0	0	0	2	0	0	2	0	0	0	0	0
Total Volume	0	2	0	0	2	0	0	0	0	0	0	3	0	0	3	0	0	0	0	0
% App. Total	0	100	0	0		0	0	0	0		0	100	0	0		0	0	0	0	
PHF	.000	.250	.000	.000	.250	.000	.000	.000	.000	.000	.000	.375	.000	.000	.375	.000	.000	.000	.000	.000

Counts Unlimited Inc.
25286 Jaclyn Avenue
Moreno Valley, CA 92557
951-485-7934

City of Rancho Cucamonga
N/S: Archibald Avenue
E/W: 19th Street/SR-30
Weather: Sunny

File Name : RNCAR19PM
Site Code : 9150115
Start Date : 5/27/2009
Page No : 1

Groups Printed- Passenger Vehicles - Large 2 Axle Vehicles - 3 Axle Vehicles - 4+ Axle Trucks

	Archibald Avenue Southbound					19th Street/SR-30 Westbound					Archibald Avenue Northbound					19th Street/SR-30 Eastbound					
Start Time	Left	Thru	Right	RoR	App. Total	Left	Thru	Right	RoR	App. Total	Left	Thru	Right	RoR	App. Total	Left	Thru	Right	RoR	App. Total	Int. Total
04:00 PM	34	160	20	25	239	25	46	14	0	85	20	193	8	11	232	48	61	15	1	125	681
04:15 PM	29	150	23	20	222	19	61	13	4	97	28	180	7	3	218	44	58	15	6	123	660
04:30 PM	33	158	25	18	234	25	53	17	3	98	25	166	18	15	224	45	68	13	0	126	682
04:45 PM	38	210	21	12	281	23	34	19	3	79	26	191	12	6	235	47	64	18	6	135	730
Total	134	678	89	75	976	92	194	63	10	359	99	730	45	35	909	184	251	61	13	509	2753
05:00 PM	32	158	18	13	221	18	56	22	8	104	23	195	6	8	232	49	78	21	2	150	707
05:15 PM	39	165	25	17	246	30	64	25	17	136	28	210	14	7	259	58	66	14	9	147	788
05:30 PM	30	135	19	9	193	20	67	24	6	117	28	195	10	9	242	42	80	18	9	149	701
05:45 PM	48	166	37	18	269	20	59	16	6	101	33	213	20	6	272	34	67	16	7	124	766
Total	149	624	99	57	929	88	246	87	37	458	112	813	50	30	1005	183	291	69	27	570	2962
Grand Total	283	1302	188	132	1905	180	440	150	47	817	211	1543	95	65	1914	367	542	130	40	1079	5715
Apprch %	14.9	68.3	9.9	6.9		22	53.9	18.4	5.8		11	80.6	5	3.4		34	50.2	12	3.7		
Total %	5	22.8	3.3	2.3	33.3	3.1	7.7	2.6	0.8	14.3	3.7	27	1.7	1.1	33.5	6.4	9.5	2.3	0.7	18.9	
Passenger Vehicles		1296										1539									
% Passenger Vehicles	99.6	99.5	100	100	99.6	98.9	99.1	100	97.9	99.1	100	99.7	100	100	99.8	99.7	99.3	100	100	99.5	99.6
Large 2 Axle Vehicles																					
% Large 2 Axle Vehicles	0.4	0.4	0	0	0.3	1.1	0.9	0	0	0.7	0	0.1	0	0	0.1	0.3	0.7	0	0	0.5	0.3
3 Axle Vehicles	0	1	0	0	1	0	0	0	0	0	0	2	0	0	2	0	0	0	0	0	3
% 3 Axle Vehicles	0	0.1	0	0	0.1	0	0	0	0	0	0	0.1	0	0	0.1	0	0	0	0	0	0.1
4+ Axle Trucks	0	0	0	0	0	0	0	0	1	1	0	1	0	0	1	0	0	0	0	0	2
% 4+ Axle Trucks																					

	Archibald Avenue Southbound					19th Street/SR-30 Westbound					Archibald Avenue Northbound					19th Street/SR-30 Eastbound					
Start Time	Left	Thru	Right	RoR	App. Total	Left	Thru	Right	RoR	App. Total	Left	Thru	Right	RoR	App. Total	Left	Thru	Right	RoR	App. Total	Int. Total
Peak Hour Analysis From 04:00 PM to 05:45 PM - Peak 1 of 1																					
Peak Hour for Entire Intersection Begins at 05:00 PM																					
05:00 PM	32	158	18	13	221	18	56	22	8	104	23	195	6	8	232	49	78	**21**	2	**150**	707
05:15 PM	39	165	25	17	246	**30**	64	**25**	**17**	**136**	28	210	14	7	259	**58**	66	14	**9**	147	**788**
05:30 PM	30	135	19	9	193	20	**67**	24	6	117	28	195	10	**9**	242	42	**80**	18	9	149	701
05:45 PM	**48**	**166**	**37**	**18**	**269**	20	59	16	6	101	**33**	**213**	**20**	6	**272**	34	67	16	7	124	766
Total Volume	149	624	99	57	929	88	246	87	37	458	112	813	50	30	1005	183	291	69	27	570	2962
% App. Total	16	67.2	10.7	6.1		19.2	53.7	19	8.1		11.1	80.9	5	3		32.1	51.1	12.1	4.7		
PHF	.776	.940	.669	.792	.863	.733	.918	.870	.544	.842	.848	.954	.625	.833	.924	.789	.909	.821	.750	.950	.940

Counts Unlimited Inc.
25286 Jaclyn Avenue
Moreno Valley, CA 92557
951-485-7934

City of Rancho Cucamonga
N/S: Archibald Avenue
E/W: 19th Street/SR-30
Weather: Sunny

File Name : RNCAR19PM
Site Code : 9150115
Start Date : 5/27/2009
Page No : 2

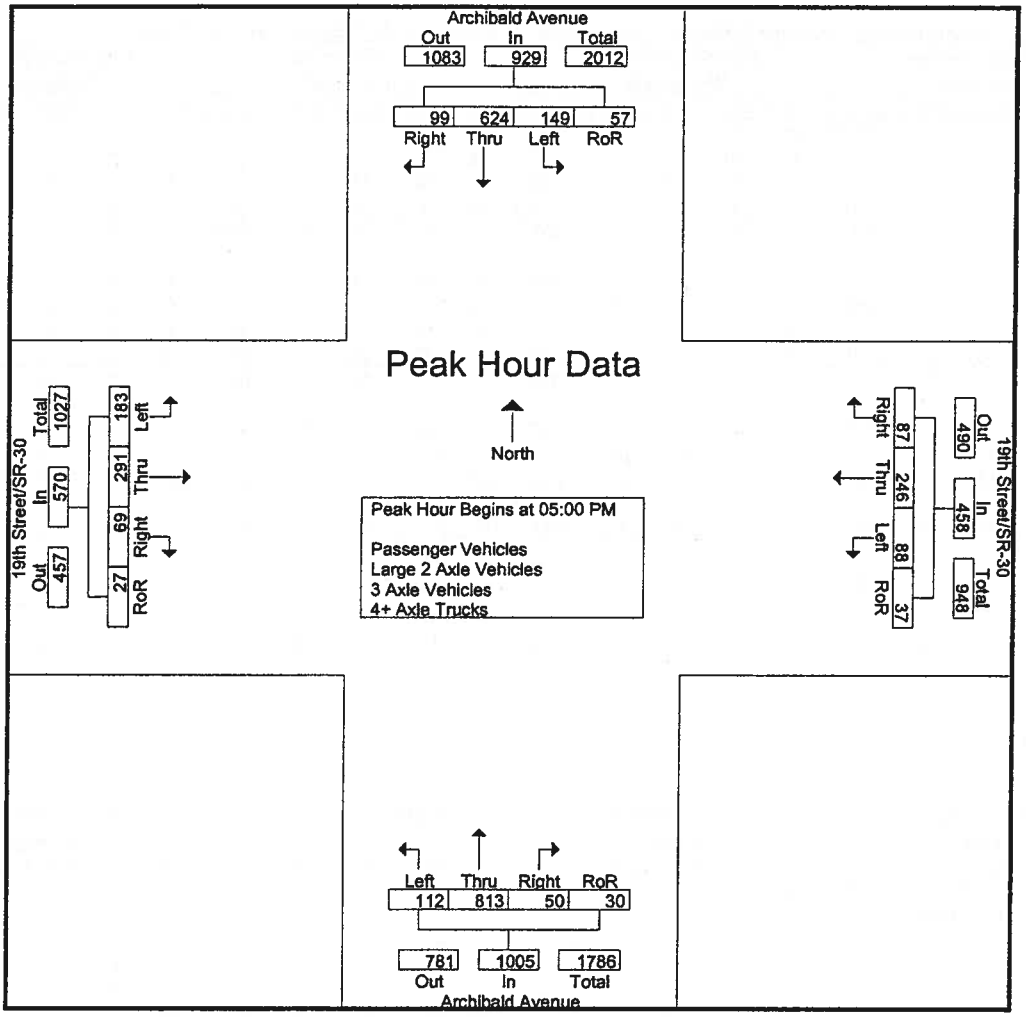

Peak Hour Analysis From 04:00 PM to 05:45 PM - Peak 1 of 1

Peak Hour for Each Approach Begins at:

	04:30 PM					05:00 PM					05:00 PM					04:45 PM				
+0 mins.	33	158	**25**	**18**	234	18	56	22	8	104	23	195	6	8	232	47	64	18	6	135
+15 mins.	38	**210**	21	12	**281**	**30**	64	**25**	**17**	**136**	28	210	14	7	259	49	78	**21**	2	**150**
+30 mins.	32	158	18	13	221	20	**67**	24	6	117	28	195	10	**9**	242	**58**	66	14	**9**	147
+45 mins.	**39**	165	25	17	246	20	59	16	6	101	**33**	**213**	**20**	6	**272**	42	**80**	18	9	149
Total Volume	142	691	89	60	982	88	246	87	37	458	112	813	50	30	1005	196	288	71	26	581
% App. Total	14.5	70.4	9.1	6.1		19.2	53.7	19	8.1		11.1	80.9	5	3		33.7	49.6	12.2	4.5	
PHF	.910	.823	.890	.833	.874	.733	.918	.870	.544	.842	.848	.954	.625	.833	.924	.845	.900	.845	.722	.968

Counts Unlimited Inc.
25286 Jaclyn Avenue
Moreno Valley, CA 92557
951-485-7934

City of Rancho Cucamonga
N/S: Archibald Avenue
E/W: 19th Street/SR-30
Weather: Sunny

File Name : RNCAR19PM
Site Code : 9150115
Start Date : 5/27/2009
Page No : 1

Groups Printed- Passenger Vehicles

	Archibald Avenue Southbound					19th Street/SR-30 Westbound					Archibald Avenue Northbound					19th Street/SR-30 Eastbound					
Start Time	Left	Thru	Right	RoR	App. Total	Left	Thru	Right	RoR	App. Total	Left	Thru	Right	RoR	App. Total	Left	Thru	Right	RoR	App. Total	Int. Total
04:00 PM	34	159	20	25	238	25	44	14	0	83	20	192	8	11	231	48	61	15	1	125	677
04:15 PM	29	150	23	20	222	18	61	13	4	96	28	178	7	3	216	44	58	15	6	123	657
04:30 PM	33	157	25	18	233	25	53	17	3	98	25	165	18	15	223	45	67	13	0	125	679
04:45 PM	38	208	21	12	279	23	34	19	3	79	26	191	12	6	235	46	64	18	6	134	727
Total	134	674	89	75	972	91	192	63	10	356	99	726	45	35	905	183	250	61	13	507	2740
05:00 PM	32	158	18	13	221	18	54	22	7	101	23	195	6	8	232	49	77	21	2	149	703
05:15 PM	39	165	25	17	246	30	64	25	17	136	28	210	14	7	259	58	66	14	9	147	788
05:30 PM	29	134	19	9	191	20	67	24	6	117	28	195	10	9	242	42	80	18	9	149	699
05:45 PM	48	165	37	18	268	19	59	16	6	100	33	213	20	6	272	34	65	16	7	122	762
Total	148	622	99	57	926	87	244	87	36	454	112	813	50	30	1005	183	288	69	27	567	2952
Grand Total	282	1296	188	132	1898	178	436	150	46	810	211	1539	95	65	1910	366	538	130	40	1074	5692
Apprch %	14.9	68.3	9.9	7		22	53.8	18.5	5.7		11	80.6	5	3.4		34.1	50.1	12.1	3.7		
Total %	5	22.8	3.3	2.3	33.3	3.1	7.7	2.6	0.8	14.2	3.7	27	1.7	1.1	33.6	6.4	9.5	2.3	0.7	18.9	

	Archibald Avenue Southbound					19th Street/SR-30 Westbound					Archibald Avenue Northbound					19th Street/SR-30 Eastbound					
Start Time	Left	Thru	Right	RoR	App. Total		Thru	Right	RoR	App. Total		Thru	Right	RoR	App. Total		Thru	Right	RoR	App. Total	Int. Total
Peak Hour Analysis From 05:00 PM to 05:45 PM - Peak 1 of 1																					
Peak Hour for Entire Intersection Begins at 05:00 PM																					
05:00 PM	32	158	18	13	221	18	54	22	7	101	23	195	6	8	232	49	77	21	2	149	703
05:15 PM	39	165	25	17	246	30	64	25	17	136	28	210	14	7	259	58	66	14	9	147	788
05:30 PM	29	134	19	9	191	20	67	24	6	117	28	195	10	9	242	42	80	18	9	149	699
05:45 PM	48	165	37	18	268	19	59	16	6	100	33	213	20	6	272	34	65	16	7	122	762
Total Volume	148	622	99	57	926	87	244	87	36	454	112	813	50	30	1005	183	288	69	27	567	2952
% App. Total	16	67.2	10.7	6.2		19.2	53.7	19.2	7.9		11.1	80.9	5	3		32.3	50.8	12.2	4.8		
PHF	.771	.942	.669	.792	.864	.725	.910	.870	.529	.835	.848	.954	.625	.833	.924	.789	.900	.821	.750	.951	.937

Counts Unlimited Inc.
25286 Jaclyn Avenue
Moreno Valley, CA 92557
951-485-7934

City of Rancho Cucamonga
N/S: Archibald Avenue
E/W: 19th Street/SR-30
Weather: Sunny

File Name : RNCAR19PM
Site Code : 9150115
Start Date : 5/27/2009
Page No : 2

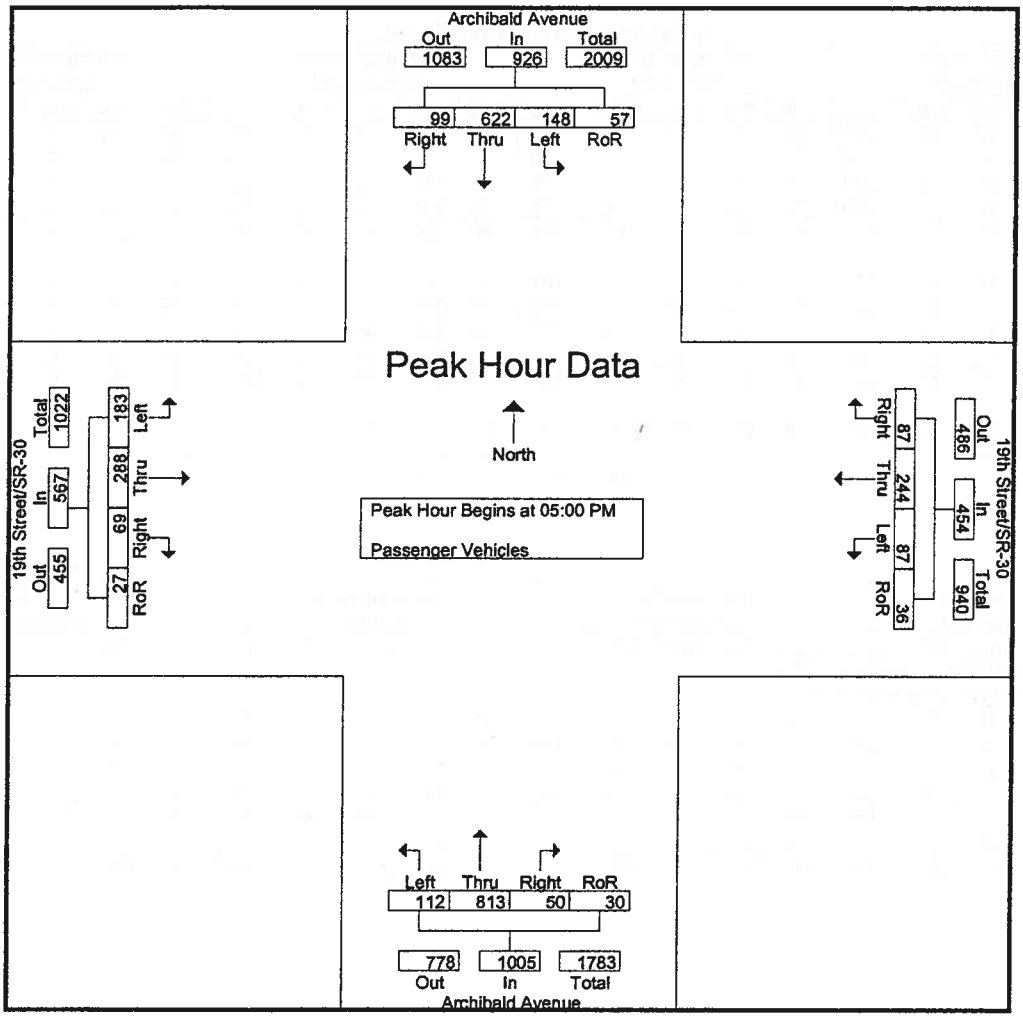

Peak Hour Analysis From 05:00 PM to 05:45 PM - Peak 1 of 1

Peak Hour for Each Approach Begins at:

	05:00 PM					05:00 PM					05:00 PM					05:00 PM				
+0 mins.	32	158	18	13	221	18	54	22	7	101	23	195	6	8	232	49	77	**21**	2	**149**
+15 mins.	39	**165**	25	17	246	**30**	64	**25**	**17**	**136**	28	210	14	7	259	**58**	66	14	**9**	147
+30 mins.	29	134	19	9	191	20	**67**	24	6	117	28	195	10	**9**	242	42	**80**	18	9	149
+45 mins.	**48**	165	**37**	**18**	**268**	19	59	16	6	100	**33**	**213**	**20**	6	**272**	34	65	16	7	122
Total Volume	148	622	99	57	926	87	244	87	36	454	112	813	50	30	1005	183	288	69	27	567
% App. Total	16	67.2	10.7	6.2		19.2	53.7	19.2	7.9		11.1	80.9	5	3		32.3	50.8	12.2	4.8	
PHF	.771	.942	.669	.792	.864	.725	.910	.870	.529	.835	.848	.954	.625	.833	.924	.789	.900	.821	.750	.951

Counts Unlimited Inc.
25286 Jaclyn Avenue
Moreno Valley, CA 92557
951-485-7934

City of Rancho Cucamonga
N/S: Archibald Avenue
E/W: 19th Street/SR-30
Weather: Sunny

File Name : RNCAR19PM
Site Code : 9150115
Start Date : 5/27/2009
Page No : 1

Groups Printed- Large 2 Axle Vehicles

	Archibald Avenue Southbound					19th Street/SR-30 Westbound					Archibald Avenue Northbound					19th Street/SR-30 Eastbound					
Start Time	Left	Thru	Right	RoR	App. Total	Left	Thru	Right	RoR	App. Total	Left	Thru	Right	RoR	App. Total	Left	Thru	Right	RoR	App. Total	Int. Total
04:00 PM	0	1	0	0	1	0	2	0	0	2	0	1	0	0	1	0	0	0	0	0	4
04:15 PM	0	0	0	0	0	1	0	0	0	1	0	0	0	0	0	0	0	0	0	0	1
04:30 PM	0	0	0	0	0	0	0	0	0	0	0	0	0	0	0	0	1	0	0	1	1
04:45 PM	0	2	0	0	2	0	0	0	0	0	0	0	0	0	0	1	0	0	0	1	3
Total	0	3	0	0	3	1	2	0	0	3	0	1	0	0	1	1	1	0	0	2	9
05:00 PM	0	0	0	0	0	0	2	0	0	2	0	0	0	0	0	0	1	0	0	1	3
05:15 PM	0	0	0	0	0	0	0	0	0	0	0	0	0	0	0	0	0	0	0	0	0
05:30 PM	1	1	0	0	2	0	0	0	0	0	0	0	0	0	0	0	0	0	0	0	2
05:45 PM	0	1	0	0	1	1	0	0	0	1	0	0	0	0	0	0	2	0	0	2	4
Total	1	2	0	0	3	1	2	0	0	3	0	0	0	0	0	0	3	0	0	3	9
Grand Total	1	5	0	0	6	2	4	0	0	6	0	1	0	0	1	1	4	0	0	5	18
Apprch %	16.7	83.3	0	0		33.3	66.7	0	0		0	100	0	0		20	80	0	0		
Total %	5.6	27.8	0	0	33.3	11.1	22.2	0	0	33.3	0	5.6	0	0	5.6	5.6	22.2	0	0	27.8	

	Archibald Avenue Southbound					19th Street/SR-30 Westbound					Archibald Avenue Northbound					19th Street/SR-30 Eastbound					
Start Time	Left	Thru	Right	RoR	App. Total		Thru	Right	RoR	App. Total		Thru	Right	RoR	App. Total		Thru	Right	RoR	App. Total	Int. Total
Peak Hour Analysis From 05:00 PM to 05:45 PM - Peak 1 of 1																					
Peak Hour for Entire Intersection Begins at 05:00 PM																					
05:00 PM	0	0	0	0	0	0	2	0	0	2	0	0	0	0	0	0	1	0	0	1	3
05:15 PM	0	0	0	0	0	0	0	0	0	0	0	0	0	0	0	0	0	0	0	0	0
05:30 PM	1	1	0	0	2	0	0	0	0	0	0	0	0	0	0	0	0	0	0	0	2
05:45 PM	0	1	0	0	1	1	0	0	0	1	0	0	0	0	0	0	2	0	0	2	4
Total Volume	1	2	0	0	3	1	2	0	0	3	0	0	0	0	0	0	3	0	0	3	9
% App. Total	33.3	66.7	0	0		33.3	66.7	0	0		0	0	0	0		0	100	0	0		
PHF	.250	.500	.000	.000	.375	.250	.250	.000	.000	.375	.000	.000	.000	.000	.000	.000	.375	.000	.000	.375	.563

Counts Unlimited Inc.
25286 Jaclyn Avenue
Moreno Valley, CA 92557
951-485-7934

City of Rancho Cucamonga
N/S: Archibald Avenue
E/W: 19th Street/SR-30
Weather: Sunny

File Name : RNCAR19PM
Site Code : 9150115
Start Date : 5/27/2009
Page No : 2

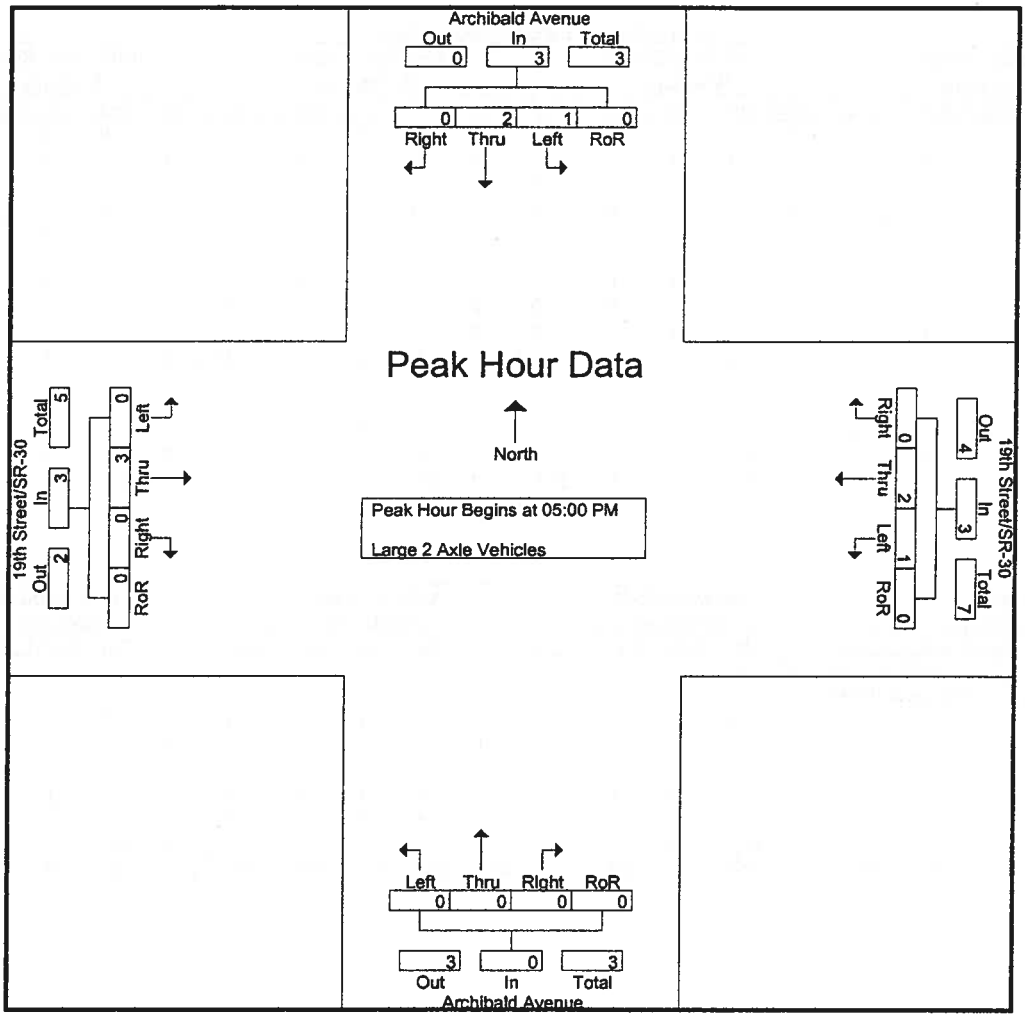

Peak Hour Analysis From 05:00 PM to 05:45 PM - Peak 1 of 1

Peak Hour for Each Approach Begins at:

	05:00 PM					05:00 PM					05:00 PM					05:00 PM				
+0 mins.	0	0	0	0	0	0	2	0	0	2	0	0	0	0	0	0	1	0	0	1
+15 mins.	0	0	0	0	0	0	0	0	0	0	0	0	0	0	0	0	0	0	0	0
+30 mins.	1	1	0	0	2	0	0	0	0	0	0	0	0	0	0	0	0	0	0	0
+45 mins.	0	1	0	0	1	1	0	0	0	1	0	0	0	0	0	0	2	0	0	2
Total Volume	1	2	0	0	3	1	2	0	0	3	0	0	0	0	0	0	3	0	0	3
% App. Total	33.3	66.7	0	0		33.3	66.7	0	0		0	0	0	0		0	100	0	0	
PHF	.250	.500	.000	.000	.375	.250	.250	.000	.000	.375	.000	.000	.000	.000	.000	.000	.375	.000	.000	.375

Counts Unlimited Inc.
25286 Jaclyn Avenue
Moreno Valley, CA 92557
951-485-7934

City of Rancho Cucamonga
N/S: Archibald Avenue
E/W: 19th Street/SR-30
Weather: Sunny

File Name : RNCAR19PM
Site Code : 9150115
Start Date : 5/27/2009
Page No : 1

Groups Printed- 3 Axle Vehicles

	Archibald Avenue Southbound					19th Street/SR-30 Westbound					Archibald Avenue Northbound					19th Street/SR-30 Eastbound					
Start Time	Left	Thru	Right	RoR	App. Total	Left	Thru	Right	RoR	App. Total	Left	Thru	Right	RoR	App. Total	Left	Thru	Right	RoR	App. Total	Int. Total
04:00 PM	0	0	0	0	0	0	0	0	0	0	0	0	0	0	0	0	0	0	0	0	0
04:15 PM	0	0	0	0	0	0	0	0	0	0	0	1	0	0	1	0	0	0	0	0	1
04:30 PM	0	1	0	0	1	0	0	0	0	0	0	1	0	0	1	0	0	0	0	0	2
04:45 PM	0	0	0	0	0	0	0	0	0	0	0	0	0	0	0	0	0	0	0	0	0
Total	0	1	0	0	1	0	0	0	0	0	0	2	0	0	2	0	0	0	0	0	3
05:00 PM	0	0	0	0	0	0	0	0	0	0	0	0	0	0	0	0	0	0	0	0	0
05:15 PM	0	0	0	0	0	0	0	0	0	0	0	0	0	0	0	0	0	0	0	0	0
05:30 PM	0	0	0	0	0	0	0	0	0	0	0	0	0	0	0	0	0	0	0	0	0
05:45 PM	0	0	0	0	0	0	0	0	0	0	0	0	0	0	0	0	0	0	0	0	0
Total	0	0	0	0	0	0	0	0	0	0	0	0	0	0	0	0	0	0	0	0	0
Grand Total	0	1	0	0	1	0	0	0	0	0	0	2	0	0	2	0	0	0	0	0	3
Apprch %	0	100	0	0		0	0	0	0		0	100	0	0		0	0	0	0		
Total %	0	33.3	0	0	33.3	0	0	0	0	0	0	66.7	0	0	66.7	0	0	0	0	0	

	Archibald Avenue Southbound					19th Street/SR-30 Westbound					Archibald Avenue Northbound					19th Street/SR-30 Eastbound					
Start Time	Left	Thru	Right	RoR	App. Total		Thru	Right	RoR	App. Total		Thru	Right	RoR	App. Total		Thru	Right	RoR	App. Total	Int. Total
Peak Hour Analysis From 05:00 PM to 05:45 PM - Peak 1 of 1																					
Peak Hour for Entire Intersection Begins at 05:00 PM																					
05:00 PM	0	0	0	0	0	0	0	0	0	0	0	0	0	0	0	0	0	0	0	0	0
05:15 PM	0	0	0	0	0	0	0	0	0	0	0	0	0	0	0	0	0	0	0	0	0
05:30 PM	0	0	0	0	0	0	0	0	0	0	0	0	0	0	0	0	0	0	0	0	0
05:45 PM	0	0	0	0	0	0	0	0	0	0	0	0	0	0	0	0	0	0	0	0	0
Total Volume	0	0	0	0	0	0	0	0	0	0	0	0	0	0	0	0	0	0	0	0	0
% App. Total	0	0	0	0		0	0	0	0		0	0	0	0		0	0	0	0		
PHF	.000	.000	.000	.000	.000	.000	.000	.000	.000	.000	.000	.000	.000	.000	.000	.000	.000	.000	.000	.000	.000

Counts Unlimited Inc.
25286 Jaclyn Avenue
Moreno Valley, CA 92557
951-485-7934

City of Rancho Cucamonga
N/S: Archibald Avenue
E/W: 19th Street/SR-30
Weather: Sunny

File Name : RNCAR19PM
Site Code : 9150115
Start Date : 5/27/2009
Page No : 2

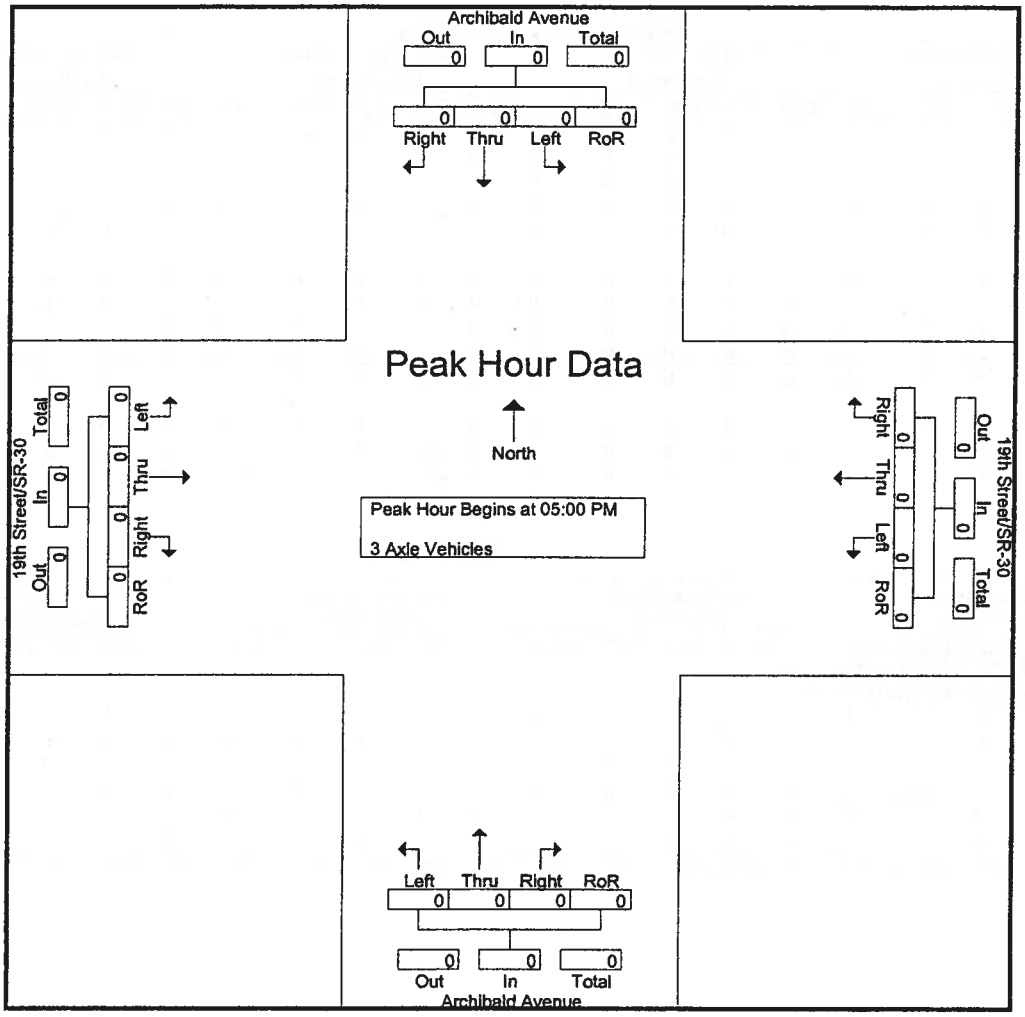

Peak Hour Analysis From 05:00 PM to 05:45 PM - Peak 1 of 1

Peak Hour for Each Approach Begins at:

	05:00 PM					05:00 PM					05:00 PM					05:00 PM				
+0 mins.	0	0	0	0	0	0	0	0	0	0	0	0	0	0	0	0	0	0	0	0
+15 mins.	0	0	0	0	0	0	0	0	0	0	0	0	0	0	0	0	0	0	0	0
+30 mins.	0	0	0	0	0	0	0	0	0	0	0	0	0	0	0	0	0	0	0	0
+45 mins.	0	0	0	0	0	0	0	0	0	0	0	0	0	0	0	0	0	0	0	0
Total Volume	0	0	0	0	0	0	0	0	0	0	0	0	0	0	0	0	0	0	0	0
% App. Total	0	0	0	0		0	0	0	0		0	0	0	0		0	0	0	0	
PHF	.000	.000	.000	.000	.000	.000	.000	.000	.000	.000	.000	.000	.000	.000	.000	.000	.000	.000	.000	.000

Counts Unlimited Inc.
25286 Jaclyn Avenue
Moreno Valley, CA 92557
951-485-7934

City of Rancho Cucamonga
N/S: Archibald Avenue
E/W: 19th Street/SR-30
Weather: Sunny

File Name : RNCAR19PM
Site Code : 9150115
Start Date : 5/27/2009
Page No : 1

Groups Printed- 4+ Axle Trucks

	Archibald Avenue Southbound					19th Street/SR-30 Westbound					Archibald Avenue Northbound					19th Street/SR-30 Eastbound					
Start Time	Left	Thru	Right	RoR	App. Total	Left	Thru	Right	RoR	App. Total	Left	Thru	Right	RoR	App. Total	Left	Thru	Right	RoR	App. Total	Int. Total
04:00 PM	0	0	0	0	0	0	0	0	0	0	0	0	0	0	0	0	0	0	0	0	0
04:15 PM	0	0	0	0	0	0	0	0	0	0	0	1	0	0	1	0	0	0	0	0	1
04:30 PM	0	0	0	0	0	0	0	0	0	0	0	0	0	0	0	0	0	0	0	0	0
04:45 PM	0	0	0	0	0	0	0	0	0	0	0	0	0	0	0	0	0	0	0	0	0
Total	0	0	0	0	0	0	0	0	0	0	0	1	0	0	1	0	0	0	0	0	1
05:00 PM	0	0	0	0	0	0	0	0	1	1	0	0	0	0	0	0	0	0	0	0	1
05:15 PM	0	0	0	0	0	0	0	0	0	0	0	0	0	0	0	0	0	0	0	0	0
05:30 PM	0	0	0	0	0	0	0	0	0	0	0	0	0	0	0	0	0	0	0	0	0
05:45 PM	0	0	0	0	0	0	0	0	0	0	0	0	0	0	0	0	0	0	0	0	0
Total	0	0	0	0	0	0	0	0	1	1	0	0	0	0	0	0	0	0	0	0	1
Grand Total	0	0	0	0	0	0	0	0	1	1	0	1	0	0	1	0	0	0	0	0	2
Apprch %	0	0	0	0		0	0	0	100		0	100	0	0		0	0	0	0		
Total %	0	0	0	0	0	0	0	0	50	50	0	50	0	0	50	0	0	0	0	0	

	Archibald Avenue Southbound					19th Street/SR-30 Westbound					Archibald Avenue Northbound					19th Street/SR-30 Eastbound					
Start Time	Left	Thru	Right	RoR	App. Total	Left	Thru	Right	RoR	App. Total	Left	Thru	Right	RoR	App. Total	Left	Thru	Right	RoR	App. Total	Int. Total
Peak Hour Analysis From 05:00 PM to 05:45 PM - Peak 1 of 1																					
Peak Hour for Entire Intersection Begins at 05:00 PM																					
05:00 PM	0	0	0	0	0	0	0	0	1	1	0	0	0	0	0	0	0	0	0	0	1
05:15 PM	0	0	0	0	0	0	0	0	0	0	0	0	0	0	0	0	0	0	0	0	0
05:30 PM	0	0	0	0	0	0	0	0	0	0	0	0	0	0	0	0	0	0	0	0	0
05:45 PM	0	0	0	0	0	0	0	0	0	0	0	0	0	0	0	0	0	0	0	0	0
Total Volume	0	0	0	0	0	0	0	0	1	1	0	0	0	0	0	0	0	0	0	0	1
% App. Total	0	0	0	0		0	0	0	100		0	0	0	0		0	0	0	0		
PHF	.000	.000	.000	.000	.000	.000	.000	.000	.250	.250	.000	.000	.000	.000	.000	.000	.000	.000	.000	.000	.250

Counts Unlimited Inc.
25286 Jaclyn Avenue
Moreno Valley, CA 92557
951-485-7934

City of Rancho Cucamonga
N/S: Archibald Avenue
E/W: 19th Street/SR-30
Weather: Sunny

File Name : RNCAR19PM
Site Code : 9150115
Start Date : 5/27/2009
Page No : 2

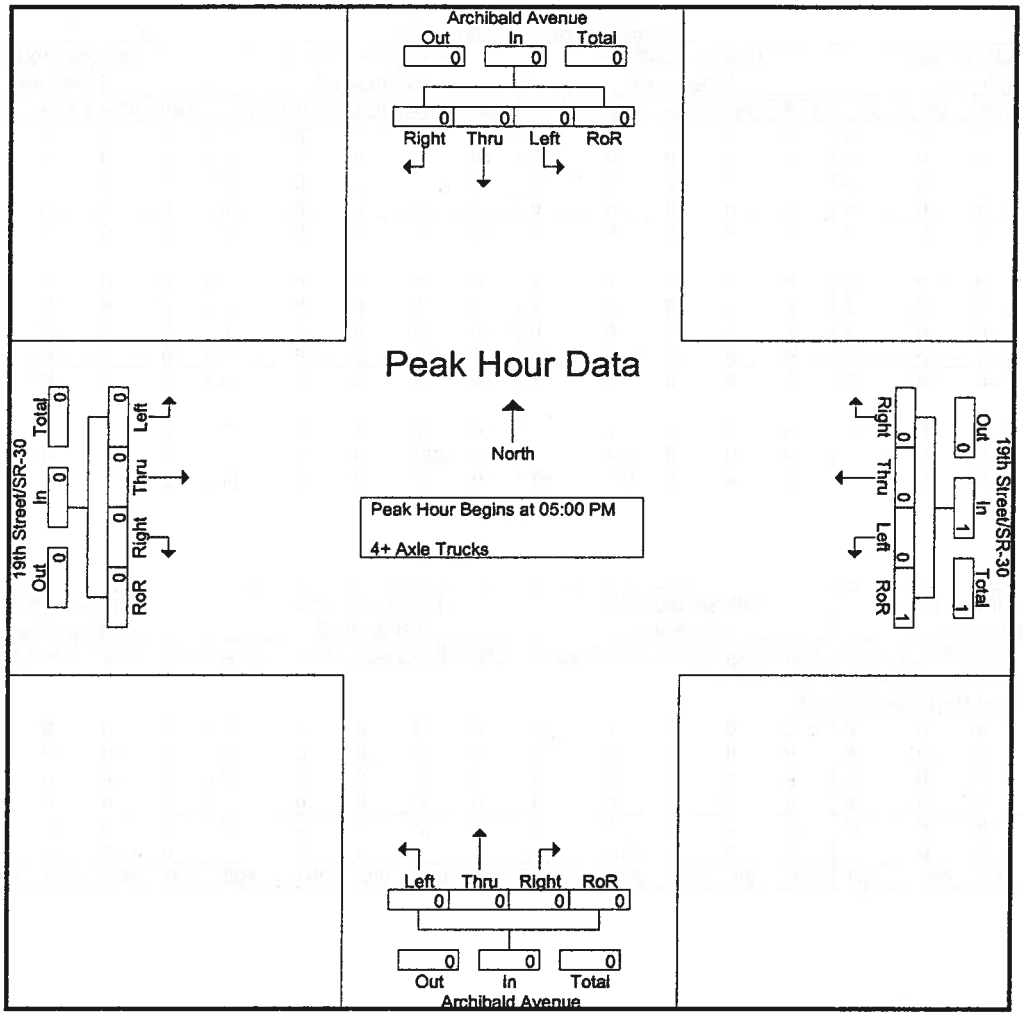

Peak Hour Analysis From 05:00 PM to 05:45 PM - Peak 1 of 1

Peak Hour for Each Approach Begins at:

	05:00 PM					05:00 PM					05:00 PM					05:00 PM				
+0 mins.	0	0	0	0	0	0	0	0	1	1	0	0	0	0	0	0	0	0	0	0
+15 mins.	0	0	0	0	0	0	0	0	0	0	0	0	0	0	0	0	0	0	0	0
+30 mins.	0	0	0	0	0	0	0	0	0	0	0	0	0	0	0	0	0	0	0	0
+45 mins.	0	0	0	0	0	0	0	0	0	0	0	0	0	0	0	0	0	0	0	0
Total Volume	0	0	0	0	0	0	0	0	1	1	0	0	0	0	0	0	0	0	0	0
% App. Total	0	0	0	0		0	0	0	100		0	0	0	0		0	0	0	0	
PHF	.000	.000	.000	.000	.000	.000	.000	.000	.250	.250	.000	.000	.000	.000	.000	.000	.000	.000	.000	.000

PASSENGER CAR EQUIVALENCY PEAK HOUR COUNT SUMMARY

INTERSECTION 8
Archibald Avenue (NS) / Baseline Road (EW)

AM PEAK HOUR

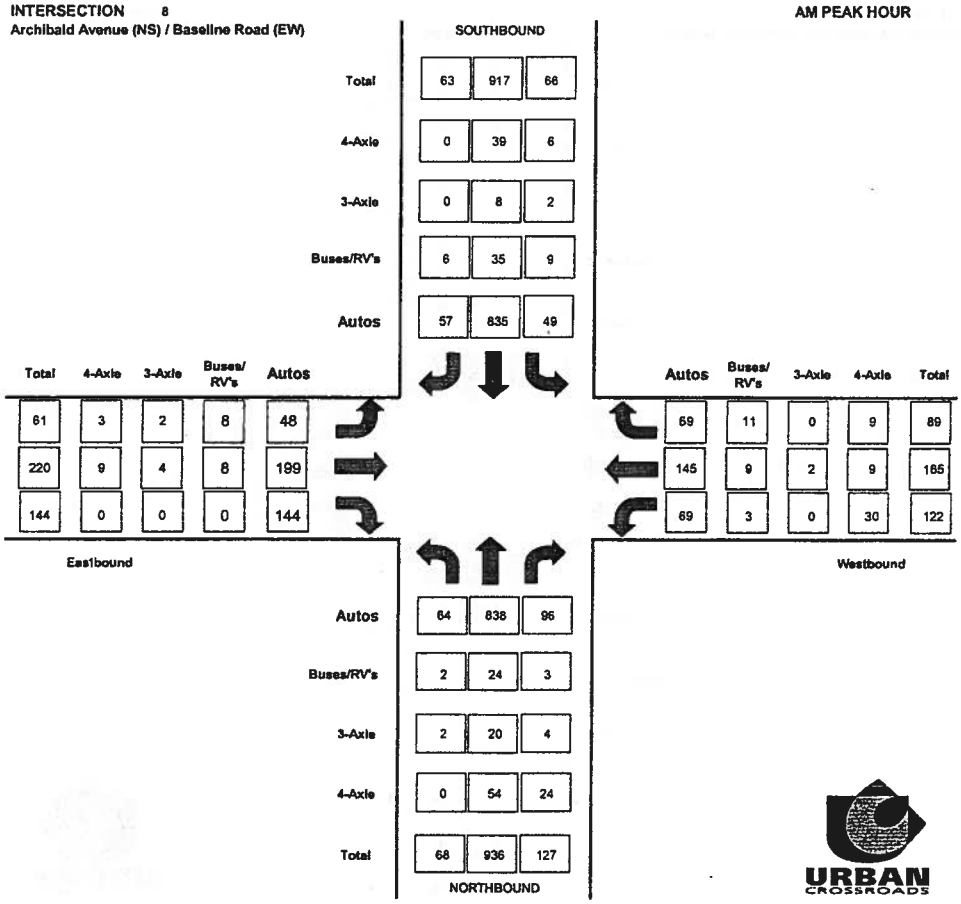

INTERSECTION 8
Archibald Avenue (NS) / Baseline Road (EW)

PM PEAK HOUR

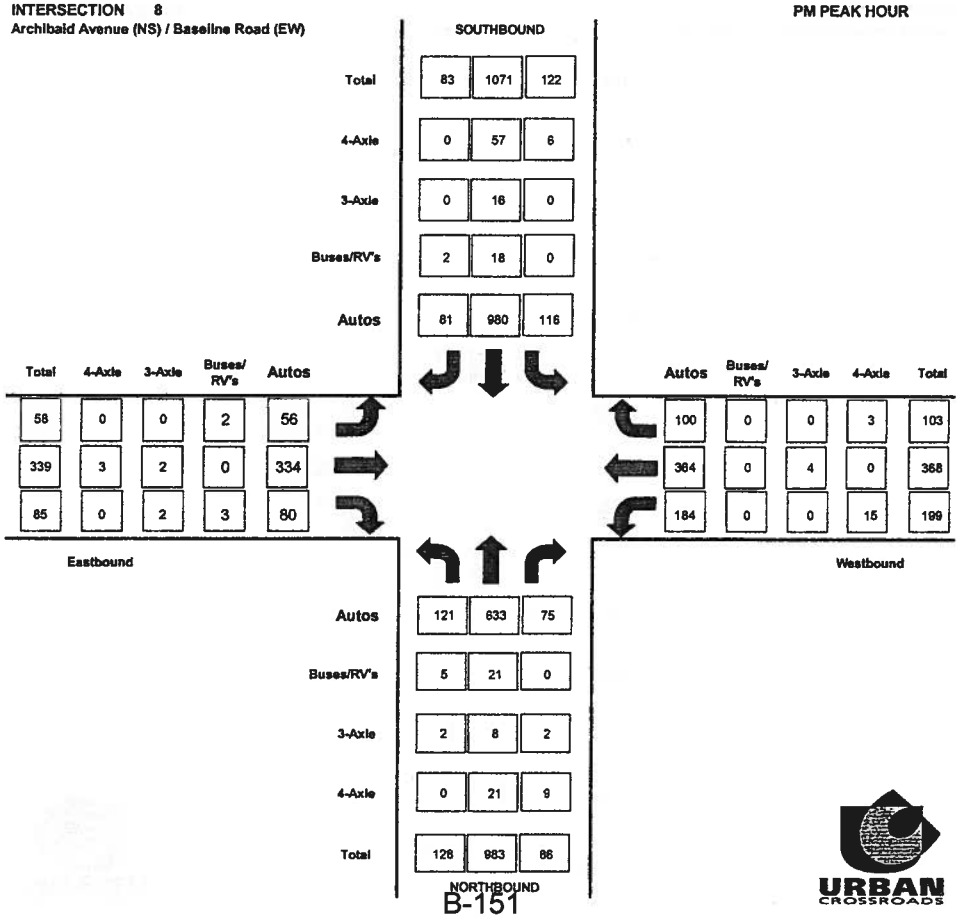

RAW PEAK HOUR COUNT SUMMARY

INTERSECTION 8
Archibald Avenue (NS) / Baseline Road (EW)

AM PEAK HOUR

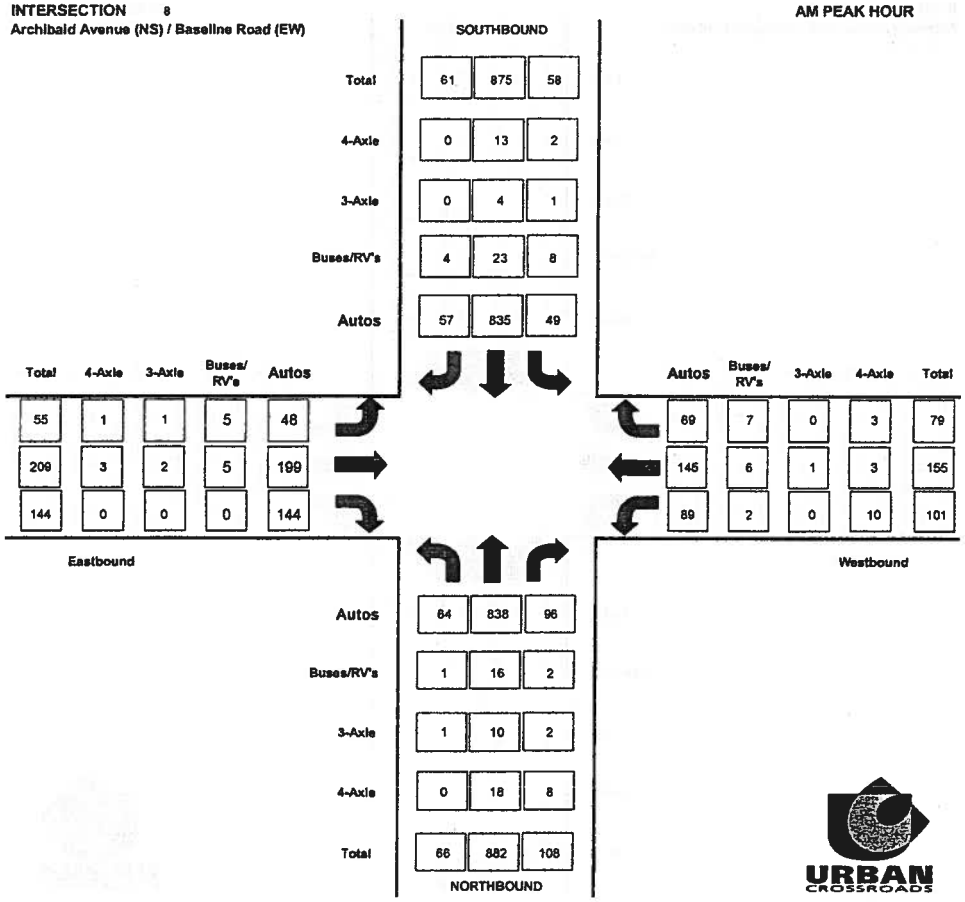

INTERSECTION 8
Archibald Avenue (NS) / Baseline Road (EW)

PM PEAK HOUR

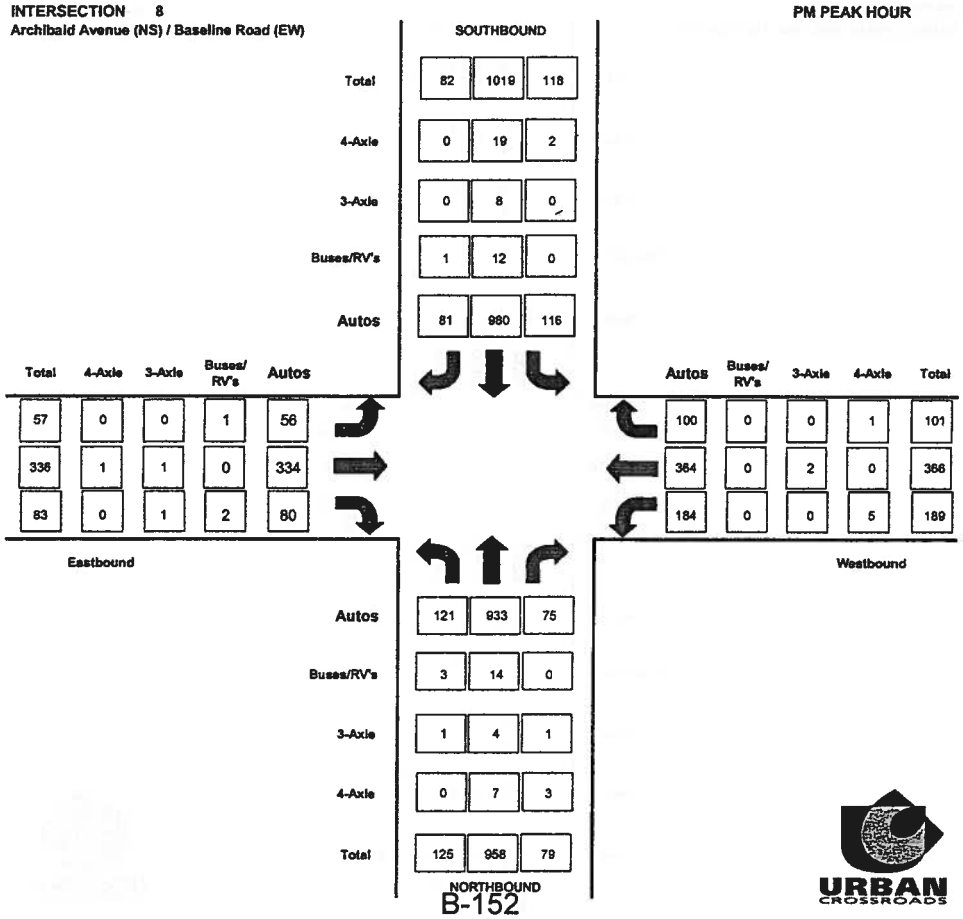

Counts Unlimited Inc.
25286 Jaclyn Avenue
Moreno Valley, CA 92557
951-485-7934

City of Rancho Cucamonga
N/S: Archibald Avenue
E/W: Baseline Road
Weather: Sunny

File Name : RNCAR4AM
Site Code : 9150063
Start Date : 5/28/2009
Page No : 1

Groups Printed- Passenger Vehicles - Large 2 Axle Vehicles - 3 Axle Vehicles - 4+ Axle Trucks

	Archibald Avenue Southbound					Baseline Road Westbound					Archibald Avenue Northbound					Baseline Road Eastbound					
Start Time	Left	Thru	Right	RoR	App. Total	Left	Thru	Right	RoR	App. Total	Left	Thru	Right	RoR	App. Total	Left	Thru	Right	RoR	App. Total	Int. Total
07:00 AM	14	215	7	3	239	28	29	8	5	70	13	168	16	3	200	8	36	20	14	78	587
07:15 AM	14	217	8	4	243	27	22	5	13	67	12	184	13	5	214	19	57	34	12	122	646
07:30 AM	17	261	7	11	296	19	32	3	14	68	16	206	23	3	248	9	45	35	6	95	707
07:45 AM	16	220	10	7	253	34	48	10	12	104	17	249	20	10	296	15	68	30	8	121	774
Total	61	913	32	25	1031	108	131	26	44	309	58	807	72	21	958	51	206	119	40	416	2714
08:00 AM	11	177	10	4	202	21	53	14	8	96	21	243	26	8	298	12	39	13	6	70	666
08:15 AM	13	175	5	10	203	29	37	7	5	78	15	158	11	4	188	9	46	13	9	77	546
08:30 AM	28	173	9	7	217	16	58	9	6	89	19	187	15	6	227	10	80	15	3	108	641
08:45 AM	17	175	6	14	212	13	49	15	7	84	15	203	12	5	235	9	65	10	10	94	625
Total	69	700	30	35	834	79	197	45	26	347	70	791	64	23	948	40	230	51	28	349	2478
Grand Total	130	1613	62	60	1865	187	328	71	70	656	128	1598	136	44	1906	91	436	170	68	765	5192
Apprch %	7	86.5	3.3	3.2		28.5	50	10.8	10.7		6.7	83.8	7.1	2.3		11.9	57	22.2	8.9		
Total %	2.5	31.1	1.2	1.2	35.9	3.6	6.3	1.4	1.3	12.6	2.5	30.8	2.6	0.8	36.7	1.8	8.4	3.3	1.3	14.7	
Passenger Vehicles		1520										1506									
% Passenger Vehicles	90	94.2	88.7	98.3	93.9	90.4	92.7	81.7	88.6	90.4	95.3	94.2	87.5	100	94	89	94.7	99.4	100	95.6	93.7
Large 2 Axle Vehicles																					
% Large 2 Axle Vehicles	5.4	3.4	9.7	1.7	3.7	1.6	4.3	11.3	7.1	4.6	1.6	2.9	2.2	0	2.7	5.5	3.4	0	0	2.6	3.3
3 Axle Vehicles																					
% 3 Axle Vehicles	0.8	0.6	0	0	0.5	0	1.2	1.4	0	0.8	3.1	1	1.5	0	1.2	4.4	0.7	0	0	0.9	0.8
4+ Axle Trucks	5	29	1	0	35	15	6	4	3	28	0	30	12	0	42	1	5	1	0	7	112
% 4+ Axle Trucks																					

	Archibald Avenue Southbound					Baseline Road Westbound					Archibald Avenue Northbound					Baseline Road Eastbound					
Start Time	Left	Thru	Right	RoR	App. Total	Left	Thru	Right	RoR	App. Total	Left	Thru	Right	RoR	App. Total	Left	Thru	Right	RoR	App. Total	Int. Total
Peak Hour Analysis From 07:00 AM to 08:45 AM - Peak 1 of 1																					
Peak Hour for Entire Intersection Begins at 07:15 AM																					
07:15 AM	14	217	8	4	243	27	22	5	13	67	12	184	13	5	214	**19**	57	34	**12**	**122**	646
07:30 AM	**17**	**261**	7	**11**	**296**	19	32	3	**14**	68	16	206	23	3	248	9	45	**35**	6	95	707
07:45 AM	16	220	**10**	7	253	**34**	48	10	12	**104**	17	**249**	20	**10**	296	15	**68**	30	8	121	**774**
08:00 AM	11	177	10	4	202	21	**53**	**14**	8	96	**21**	243	**26**	8	**298**	12	39	13	6	70	666
Total Volume	58	875	35	26	994	101	155	32	47	335	66	882	82	26	1056	55	209	112	32	408	2793
% App. Total	5.8	88	3.5	2.6		30.1	46.3	9.6	14		6.2	83.5	7.8	2.5		13.5	51.2	27.5	7.8		
PHF	.853	.838	.875	.591	.840	.743	.731	.571	.839	.805	.786	.886	.788	.650	.886	.724	.768	.800	.667	.836	.902

Counts Unlimited Inc.
25286 Jaclyn Avenue
Moreno Valley, CA 92557
951-485-7934

City of Rancho Cucamonga
N/S: Archibald Avenue
E/W: Baseline Road
Weather: Sunny

File Name : RNCAR4AM
Site Code : 9150063
Start Date : 5/28/2009
Page No : 2

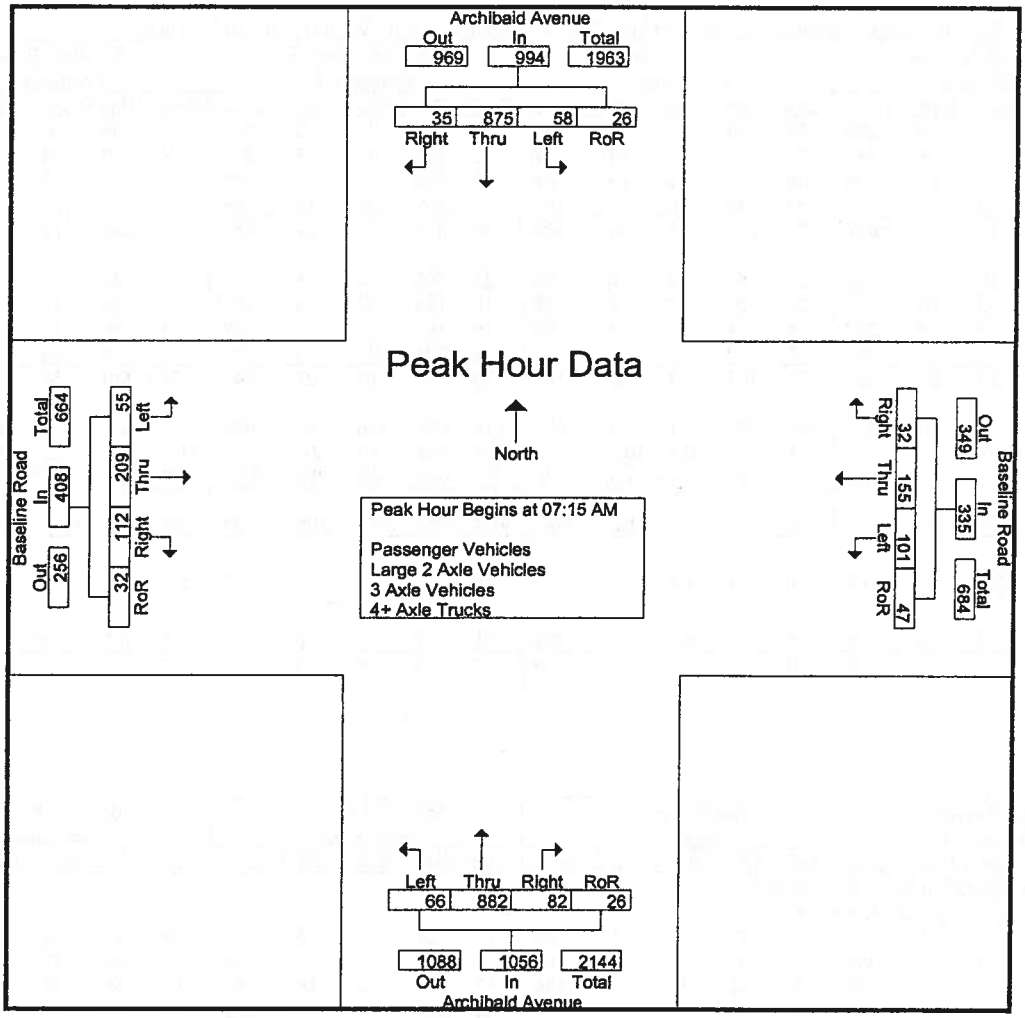

Peak Hour Analysis From 07:00 AM to 08:45 AM - Peak 1 of 1

Peak Hour for Each Approach Begins at:

	07:00 AM					07:45 AM					07:15 AM					07:00 AM				
+0 mins.	14	215	7	3	239	**34**	48	10	**12**	**104**	12	184	13	5	214	8	36	20	**14**	78
+15 mins.	14	217	8	4	243	21	53	**14**	8	96	16	206	23	3	248	**19**	57	34	12	**122**
+30 mins.	**17**	**261**	7	**11**	**296**	29	37	7	5	78	17	**249**	20	**10**	296	9	45	**35**	6	95
+45 mins.	16	220	**10**	7	253	16	**58**	9	6	89	**21**	243	**26**	8	**298**	15	**68**	30	8	121
Total Volume	61	913	32	25	1031	100	196	40	31	367	66	882	82	26	1056	51	206	119	40	416
% App. Total	5.9	88.6	3.1	2.4		27.2	53.4	10.9	8.4		6.2	83.5	7.8	2.5		12.3	49.5	28.6	9.6	
PHF	.897	.875	.800	.568	.871	.735	.845	.714	.646	.882	.786	.886	.788	.650	.886	.671	.757	.850	.714	.852

Counts Unlimited Inc.
25286 Jaclyn Avenue
Moreno Valley, CA 92557
951-485-7934

City of Rancho Cucamonga
N/S: Archibald Avenue
E/W: Baseline Road
Weather: Sunny

File Name : RNCAR4AM
Site Code : 9150063
Start Date : 5/28/2009
Page No : 1

Groups Printed- Passenger Vehicles

	Archibald Avenue Southbound					Baseline Road Westbound					Archibald Avenue Northbound					Baseline Road Eastbound					
Start Time	Left	Thru	Right	RoR	App. Total	Left	Thru	Right	RoR	App. Total	Left	Thru	Right	RoR	App. Total	Left	Thru	Right	RoR	App. Total	Int. Total
07:00 AM	13	200	7	3	223	24	26	8	5	63	12	158	14	3	187	7	34	19	14	74	547
07:15 AM	12	209	8	4	233	24	21	2	13	60	12	177	8	5	202	16	53	34	12	115	610
07:30 AM	14	247	7	11	279	18	31	3	14	66	16	189	19	3	227	8	43	35	6	92	664
07:45 AM	14	209	7	7	237	27	45	10	10	92	17	243	18	10	288	13	64	30	8	115	732
Total	53	865	29	25	972	93	123	23	42	281	57	767	59	21	904	44	194	118	40	396	2553
08:00 AM	9	170	9	4	192	20	48	10	7	85	19	229	25	8	281	11	39	13	6	69	627
08:15 AM	13	164	4	10	191	27	33	6	4	70	14	151	11	4	180	9	43	13	9	74	515
08:30 AM	27	161	7	6	201	16	53	6	3	78	18	169	12	6	205	9	75	15	3	102	586
08:45 AM	15	160	6	14	195	13	47	13	6	79	14	190	12	5	221	8	62	10	10	90	585
Total	64	655	26	34	779	76	181	35	20	312	65	739	60	23	887	37	219	51	28	335	2313
Grand Total	117	1520	55	59	1751	169	304	58	62	593	122	1506	119	44	1791	81	413	169	68	731	4866
Apprch %	6.7	86.8	3.1	3.4		28.5	51.3	9.8	10.5		6.8	84.1	6.6	2.5		11.1	56.5	23.1	9.3		
Total %	2.4	31.2	1.1	1.2	36	3.5	6.2	1.2	1.3	12.2	2.5	30.9	2.4	0.9	36.8	1.7	8.5	3.5	1.4	15	

	Archibald Avenue Southbound					Baseline Road Westbound					Archibald Avenue Northbound					Baseline Road Eastbound					
Start Time	Left	Thru	Right	RoR	App. Total		Thru	Right	RoR	App. Total		Thru	Right	RoR	App. Total		Thru	Right	RoR	App. Total	Int. Total
Peak Hour Analysis From 07:15 AM to 08:00 AM - Peak 1 of 1																					
Peak Hour for Entire Intersection Begins at 07:15 AM																					
07:15 AM	12	209	8	4	233	24	21	2	13	60	12	177	8	5	202	16	53	34	12	115	610
07:30 AM	14	247	7	11	279	18	31	3	14	66	16	189	19	3	227	8	43	35	6	92	664
07:45 AM	14	209	7	7	237	27	45	10	10	92	17	243	18	10	288	13	64	30	8	115	732
08:00 AM	9	170	9	4	192	20	48	10	7	85	19	229	25	8	281	11	39	13	6	69	627
Total Volume	49	835	31	26	941	89	145	25	44	303	64	838	70	26	998	48	199	112	32	391	2633
% App. Total	5.2	88.7	3.3	2.8		29.4	47.9	8.3	14.5		6.4	84	7	2.6		12.3	50.9	28.6	8.2		
PHF	.875	.845	.861	.591	.843	.824	.755	.625	.786	.823	.842	.862	.700	.650	.866	.750	.777	.800	.667	.850	.899

Counts Unlimited Inc.
25286 Jaclyn Avenue
Moreno Valley, CA 92557
951-485-7934

City of Rancho Cucamonga
N/S: Archibald Avenue
E/W: Baseline Road
Weather: Sunny

File Name : RNCAR4AM
Site Code : 9150063
Start Date : 5/28/2009
Page No : 2

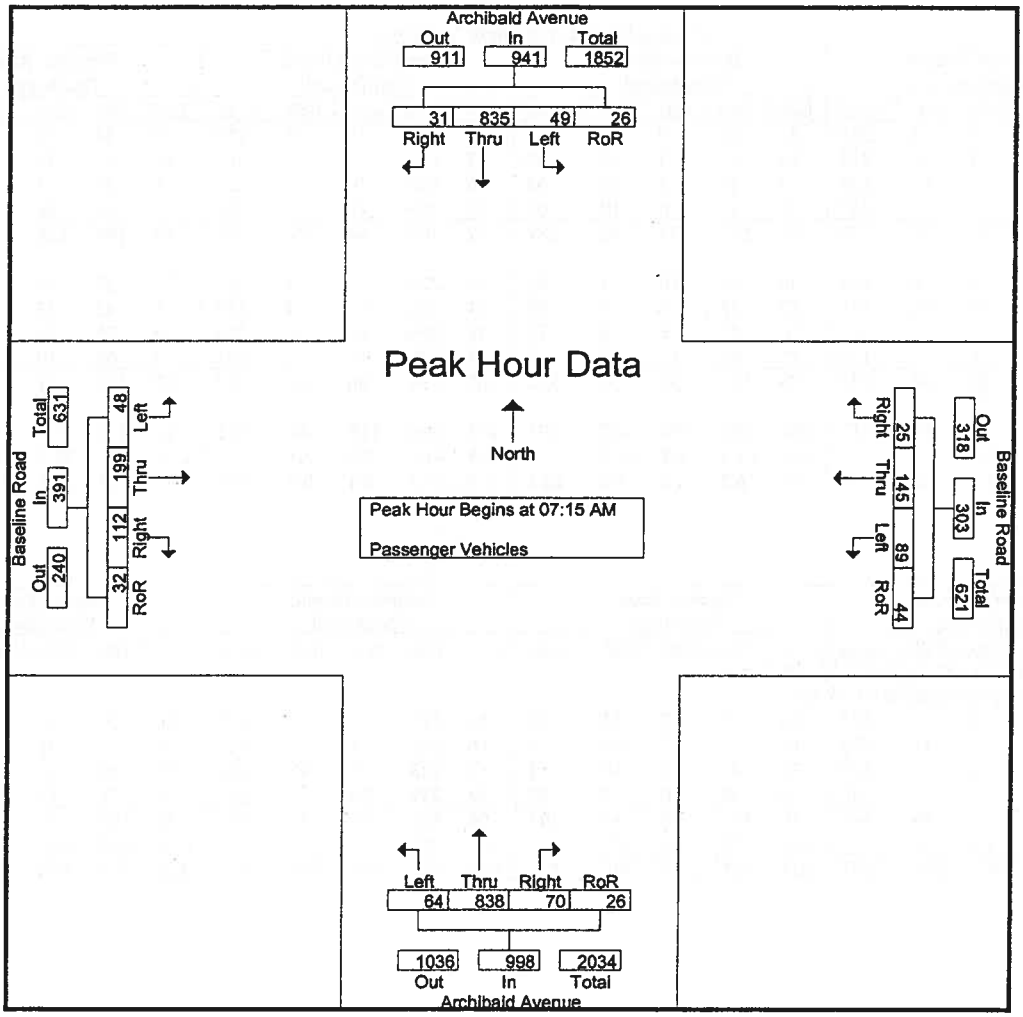

Peak Hour Analysis From 07:15 AM to 08:00 AM - Peak 1 of 1

Peak Hour for Each Approach Begins at:

	07:15 AM					07:15 AM					07:15 AM					07:15 AM				
+0 mins.	12	209	8	4	233	24	21	2	13	60	12	177	8	5	202	**16**	53	34	**12**	**115**
+15 mins.	**14**	**247**	7	**11**	**279**	18	31	3	**14**	66	16	189	19	3	227	8	43	**35**	6	92
+30 mins.	14	209	7	7	237	**27**	45	**10**	10	**92**	17	**243**	18	**10**	**288**	13	**64**	30	8	115
+45 mins.	9	170	**9**	4	192	20	**48**	10	7	85	**19**	229	**25**	8	281	11	39	13	6	69
Total Volume	49	835	31	26	941	89	145	25	44	303	64	838	70	26	998	48	199	112	32	391
% App. Total	5.2	88.7	3.3	2.8		29.4	47.9	8.3	14.5		6.4	84	7	2.6		12.3	50.9	28.6	8.2	
PHF	.875	.845	.861	.591	.843	.824	.755	.625	.786	.823	.842	.862	.700	.650	.866	.750	.777	.800	.667	.850

Counts Unlimited Inc.
25286 Jaclyn Avenue
Moreno Valley, CA 92557
951-485-7934

City of Rancho Cucamonga
N/S: Archibald Avenue
E/W: Baseline Road
Weather: Sunny

File Name : RNCAR4AM
Site Code : 9150063
Start Date : 5/28/2009
Page No : 1

Groups Printed- Large 2 Axle Vehicles

	Archibald Avenue Southbound					Baseline Road Westbound					Archibald Avenue Northbound					Baseline Road Eastbound					
Start Time	Left	Thru	Right	RoR	App. Total	Left	Thru	Right	RoR	App. Total	Left	Thru	Right	RoR	App. Total	Left	Thru	Right	RoR	App. Total	Int. Total
07:00 AM	1	10	0	0	11	0	1	0	0	1	0	4	0	0	4	0	1	0	0	1	17
07:15 AM	0	8	0	0	8	1	1	3	0	5	0	2	2	0	4	3	2	0	0	5	22
07:30 AM	3	6	0	0	9	1	0	0	0	1	0	7	0	0	7	0	1	0	0	1	18
07:45 AM	1	6	3	0	10	0	3	0	2	5	0	4	0	0	4	1	2	0	0	3	22
Total	5	30	3	0	38	2	5	3	2	12	0	17	2	0	19	4	6	0	0	10	79
08:00 AM	2	3	1	0	6	0	2	2	0	4	1	3	0	0	4	1	0	0	0	1	15
08:15 AM	0	7	1	0	8	1	3	0	1	5	0	5	0	0	5	0	3	0	0	3	21
08:30 AM	0	6	1	1	8	0	3	3	2	8	1	12	1	0	14	0	4	0	0	4	34
08:45 AM	0	9	0	0	9	0	1	0	0	1	0	9	0	0	9	0	2	0	0	2	21
Total	2	25	3	1	31	1	9	5	3	18	2	29	1	0	32	1	9	0	0	10	91
Grand Total	7	55	6	1	69	3	14	8	5	30	2	46	3	0	51	5	15	0	0	20	170
Apprch %	10.1	79.7	8.7	1.4		10	46.7	26.7	16.7		3.9	90.2	5.9	0		25	75	0	0		
Total %	4.1	32.4	3.5	0.6	40.6	1.8	8.2	4.7	2.9	17.6	1.2	27.1	1.8	0	30	2.9	8.8	0	0	11.8	

	Archibald Avenue Southbound					Baseline Road Westbound					Archibald Avenue Northbound					Baseline Road Eastbound					
Start Time	Left	Thru	Right	RoR	App. Total		Thru	Right	RoR	App. Total		Thru	Right	RoR	App. Total		Thru	Right	RoR	App. Total	Int. Total
Peak Hour Analysis From 07:15 AM to 08:00 AM - Peak 1 of 1																					
Peak Hour for Entire Intersection Begins at 07:15 AM																					
07:15 AM	0	8	0	0	8	1	1	3	0	5	0	2	2	0	4	3	2	0	0	5	22
07:30 AM	3	6	0	0	9	1	0	0	0	1	0	7	0	0	7	0	1	0	0	1	18
07:45 AM	1	6	3	0	10	0	3	0	2	5	0	4	0	0	4	1	2	0	0	3	22
08:00 AM	2	3	1	0	6	0	2	2	0	4	1	3	0	0	4	1	0	0	0	1	15
Total Volume	6	23	4	0	33	2	6	5	2	15	1	16	2	0	19	5	5	0	0	10	77
% App. Total	18.2	69.7	12.1	0		13.3	40	33.3	13.3		5.3	84.2	10.5	0		50	50	0	0		
PHF	.500	.719	.333	.000	.825	.500	.500	.417	.250	.750	.250	.571	.250	.000	.679	.417	.625	.000	.000	.500	.875

Counts Unlimited Inc.
25286 Jaclyn Avenue
Moreno Valley, CA 92557
951-485-7934

City of Rancho Cucamonga
N/S: Archibald Avenue
E/W: Baseline Road
Weather: Sunny

File Name : RNCAR4AM
Site Code : 9150063
Start Date : 5/28/2009
Page No : 2

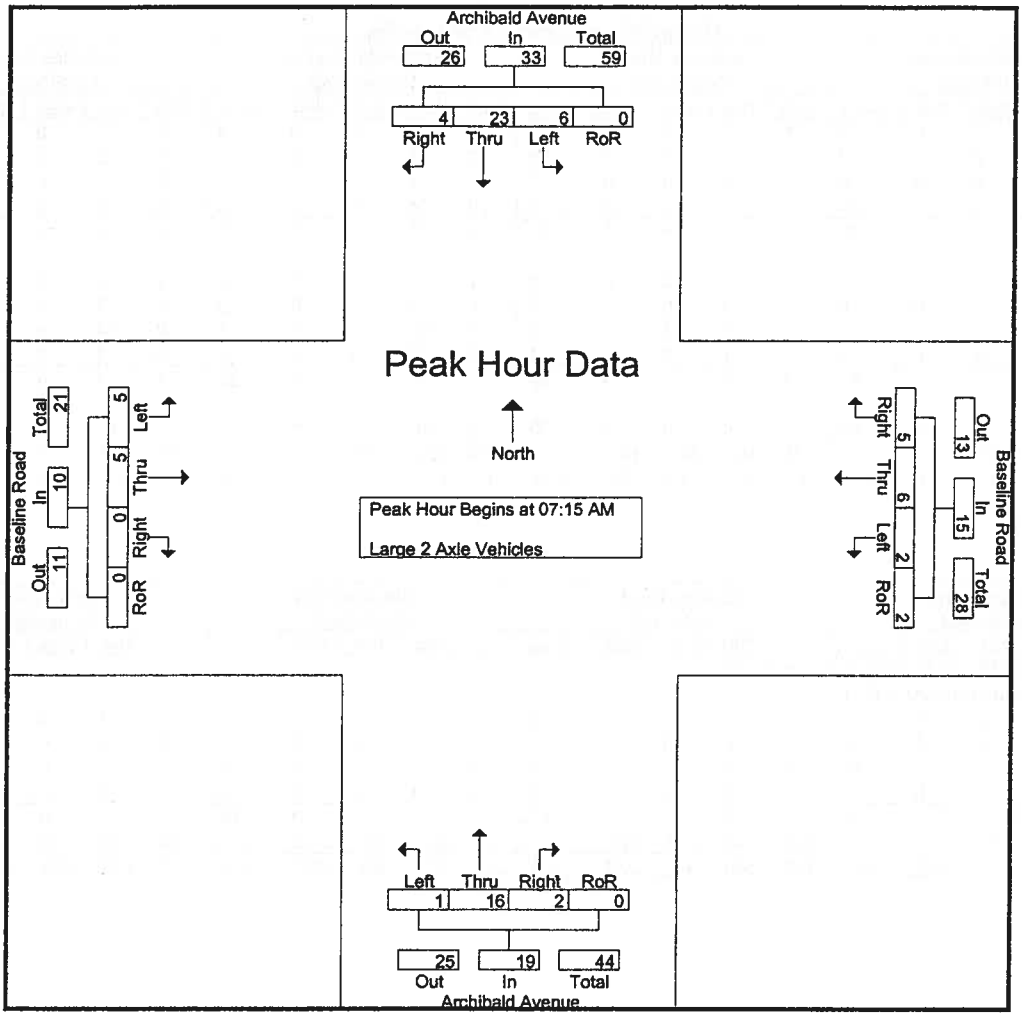

Peak Hour Analysis From 07:15 AM to 08:00 AM - Peak 1 of 1

Peak Hour for Each Approach Begins at:

	07:15 AM					07:15 AM					07:15 AM					07:15 AM				
+0 mins.	0	8	0	0	8	1	1	3	0	5	0	2	2	0	4	3	2	0	0	5
+15 mins.	3	6	0	0	9	1	0	0	0	1	0	7	0	0	7	0	1	0	0	1
+30 mins.	1	6	3	0	10	0	3	0	2	5	0	4	0	0	4	1	2	0	0	3
+45 mins.	2	3	1	0	6	0	2	2	0	4	1	3	0	0	4	1	0	0	0	1
Total Volume	6	23	4	0	33	2	6	5	2	15	1	16	2	0	19	5	5	0	0	10
% App. Total	18.2	69.7	12.1	0		13.3	40	33.3	13.3		5.3	84.2	10.5	0		50	50	0	0	
PHF	.500	.719	.333	.000	.825	.500	.500	.417	.250	.750	.250	.571	.250	.000	.679	.417	.625	.000	.000	.500

Counts Unlimited Inc.
25286 Jaclyn Avenue
Moreno Valley, CA 92557
951-485-7934

City of Rancho Cucamonga
N/S: Archibald Avenue
E/W: Baseline Road
Weather: Sunny

File Name : RNCAR4AM
Site Code : 9150063
Start Date : 5/28/2009
Page No : 1

Groups Printed- 3 Axle Vehicles

	Archibald Avenue Southbound					Baseline Road Westbound					Archibald Avenue Northbound					Baseline Road Eastbound					
Start Time	Left	Thru	Right	RoR	App. Total	Left	Thru	Right	RoR	App. Total	Left	Thru	Right	RoR	App. Total	Left	Thru	Right	RoR	App. Total	Int. Total
07:00 AM	0	1	0	0	1	0	1	0	0	1	1	2	0	0	3	1	0	0	0	1	6
07:15 AM	1	0	0	0	1	0	0	0	0	0	0	0	1	0	1	0	2	0	0	2	4
07:30 AM	0	0	0	0	0	0	0	0	0	0	0	6	0	0	6	1	0	0	0	1	7
07:45 AM	0	3	0	0	3	0	0	0	0	0	0	0	1	0	1	0	0	0	0	0	4
Total	1	4	0	0	5	0	1	0	0	1	1	8	2	0	11	2	2	0	0	4	21
08:00 AM	0	1	0	0	1	0	1	0	0	1	1	4	0	0	5	0	0	0	0	0	7
08:15 AM	0	1	0	0	1	0	1	0	0	1	1	1	0	0	2	0	0	0	0	0	4
08:30 AM	0	1	0	0	1	0	0	0	0	0	0	1	0	0	1	1	0	0	0	1	3
08:45 AM	0	2	0	0	2	0	1	1	0	2	1	2	0	0	3	1	1	0	0	2	9
Total	0	5	0	0	5	0	3	1	0	4	3	8	0	0	11	2	1	0	0	3	23
Grand Total	1	9	0	0	10	0	4	1	0	5	4	16	2	0	22	4	3	0	0	7	44
Apprch %	10	90	0	0		0	80	20	0		18.2	72.7	9.1	0		57.1	42.9	0	0		
Total %	2.3	20.5	0	0	22.7	0	9.1	2.3	0	11.4	9.1	36.4	4.5	0	50	9.1	6.8	0	0	15.9	

	Archibald Avenue Southbound					Baseline Road Westbound					Archibald Avenue Northbound					Baseline Road Eastbound					
Start Time	Left	Thru	Right	RoR	App. Total		Thru	Right	RoR	App. Total		Thru	Right	RoR	App. Total		Thru	Right	RoR	App. Total	Int. Total
Peak Hour Analysis From 07:15 AM to 08:00 AM - Peak 1 of 1																					
Peak Hour for Entire Intersection Begins at 07:15 AM																					
07:15 AM	1	0	0	0	1	0	0	0	0	0	0	0	1	0	1	0	2	0	0	2	4
07:30 AM	0	0	0	0	0	0	0	0	0	0	0	6	0	0	6	1	0	0	0	1	7
07:45 AM	0	3	0	0	3	0	0	0	0	0	0	0	1	0	1	0	0	0	0	0	4
08:00 AM	0	1	0	0	1	0	1	0	0	1	1	4	0	0	5	0	0	0	0	0	7
Total Volume	1	4	0	0	5	0	1	0	0	1	1	10	2	0	13	1	2	0	0	3	22
% App. Total	20	80	0	0		0	100	0	0		7.7	76.9	15.4	0		33.3	66.7	0	0		
PHF	.250	.333	.000	.000	.417	.000	.250	.000	.000	.250	.250	.417	.500	.000	.542	.250	.250	.000	.000	.375	.786

Counts Unlimited Inc.
25286 Jaclyn Avenue
Moreno Valley, CA 92557
951-485-7934

City of Rancho Cucamonga
N/S: Archibald Avenue
E/W: Baseline Road
Weather: Sunny

File Name : RNCAR4AM
Site Code : 9150063
Start Date : 5/28/2009
Page No : 2

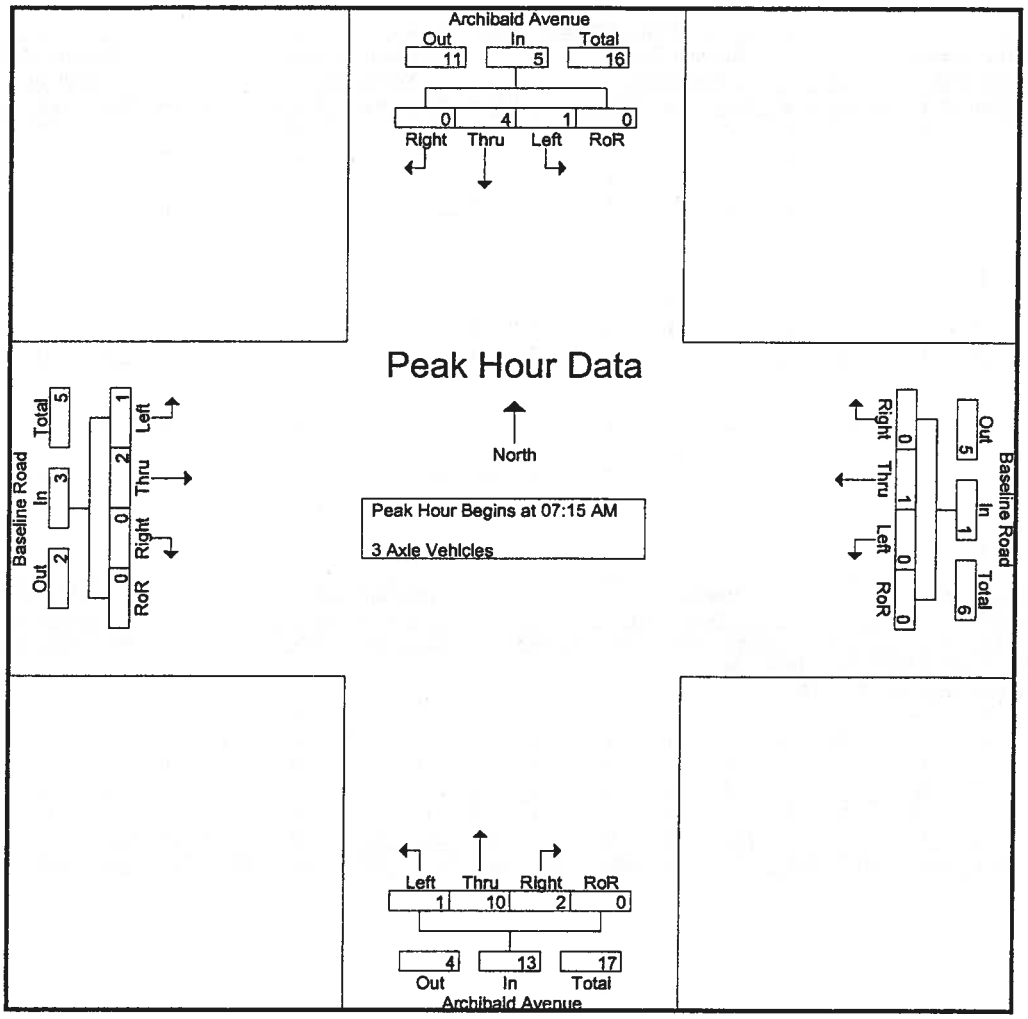

Peak Hour Analysis From 07:15 AM to 08:00 AM - Peak 1 of 1

Peak Hour for Each Approach Begins at:

	07:15 AM					07:15 AM					07:15 AM					07:15 AM				
+0 mins.	1	0	0	0	1	0	0	0	0	0	0	0	1	0	1	0	2	0	0	2
+15 mins.	0	0	0	0	0	0	0	0	0	0	0	6	0	0	6	1	0	0	0	1
+30 mins.	0	3	0	0	3	0	0	0	0	0	0	0	1	0	1	0	0	0	0	0
+45 mins.	0	1	0	0	1	0	1	0	0	1	1	4	0	0	5	0	0	0	0	0
Total Volume	1	4	0	0	5	0	1	0	0	1	1	10	2	0	13	1	2	0	0	3
% App. Total	20	80	0	0		0	100	0	0		7.7	76.9	15.4	0		33.3	66.7	0	0	
PHF	.250	.333	.000	.000	.417	.000	.250	.000	.000	.250	.250	.417	.500	.000	.542	.250	.250	.000	.000	.375

Counts Unlimited Inc.
25286 Jaclyn Avenue
Moreno Valley, CA 92557
951-485-7934

City of Rancho Cucamonga
N/S: Archibald Avenue
E/W: Baseline Road
Weather: Sunny

File Name : RNCAR4AM
Site Code : 9150063
Start Date : 5/28/2009
Page No : 1

Groups Printed- 4+ Axle Trucks

	Archibald Avenue Southbound					Baseline Road Westbound					Archibald Avenue Northbound					Baseline Road Eastbound					
Start Time	Left	Thru	Right	RoR	App. Total	Left	Thru	Right	RoR	App. Total	Left	Thru	Right	RoR	App. Total	Left	Thru	Right	RoR	App. Total	Int. Total
07:00 AM	0	4	0	0	4	4	1	0	0	5	0	4	2	0	6	0	1	1	0	2	17
07:15 AM	1	0	0	0	1	2	0	0	0	2	0	5	2	0	7	0	0	0	0	0	10
07:30 AM	0	8	0	0	8	0	1	0	0	1	0	4	4	0	8	0	1	0	0	1	18
07:45 AM	1	2	0	0	3	7	0	0	0	7	0	2	1	0	3	1	2	0	0	3	16
Total	2	14	0	0	16	13	2	0	0	15	0	15	9	0	24	1	4	1	0	6	61
08:00 AM	0	3	0	0	3	1	2	2	1	6	0	7	1	0	8	0	0	0	0	0	17
08:15 AM	0	3	0	0	3	1	0	1	0	2	0	1	0	0	1	0	0	0	0	0	6
08:30 AM	1	5	1	0	7	0	2	0	1	3	0	5	2	0	7	0	1	0	0	1	18
08:45 AM	2	4	0	0	6	0	0	1	1	2	0	2	0	0	2	0	0	0	0	0	10
Total	3	15	1	0	19	2	4	4	3	13	0	15	3	0	18	0	1	0	0	1	51
Grand Total	5	29	1	0	35	15	6	4	3	28	0	30	12	0	42	1	5	1	0	7	112
Apprch %	14.3	82.9	2.9	0		53.6	21.4	14.3	10.7		0	71.4	28.6	0		14.3	71.4	14.3	0		
Total %	4.5	25.9	0.9	0	31.2	13.4	5.4	3.6	2.7	25	0	26.8	10.7	0	37.5	0.9	4.5	0.9	0	6.2	

	Archibald Avenue Southbound					Baseline Road Westbound					Archibald Avenue Northbound					Baseline Road Eastbound					
Start Time	Left	Thru	Right	RoR	App. Total		Thru	Right	RoR	App. Total		Thru	Right	RoR	App. Total		Thru	Right	RoR	App. Total	Int. Total
Peak Hour Analysis From 07:15 AM to 08:00 AM - Peak 1 of 1																					
Peak Hour for Entire Intersection Begins at 07:15 AM																					
07:15 AM	1	0	0	0	1	2	0	0	0	2	0	5	2	0	7	0	0	0	0	0	10
07:30 AM	0	8	0	0	8	0	1	0	0	1	0	4	4	0	8	0	1	0	0	1	18
07:45 AM	1	2	0	0	3	7	0	0	0	7	0	2	1	0	3	1	2	0	0	3	16
08:00 AM	0	3	0	0	3	1	2	2	1	6	0	7	1	0	8	0	0	0	0	0	17
Total Volume	2	13	0	0	15	10	3	2	1	16	0	18	8	0	26	1	3	0	0	4	61
% App. Total	13.3	86.7	0	0		62.5	18.8	12.5	6.2		0	69.2	30.8	0		25	75	0	0		
PHF	.500	.406	.000	.000	.469	.357	.375	.250	.250	.571	.000	.643	.500	.000	.813	.250	.375	.000	.000	.333	.847

Counts Unlimited Inc.
25286 Jaclyn Avenue
Moreno Valley, CA 92557
951-485-7934

City of Rancho Cucamonga
N/S: Archibald Avenue
E/W: Baseline Road
Weather: Sunny

File Name : RNCAR4AM
Site Code : 9150063
Start Date : 5/28/2009

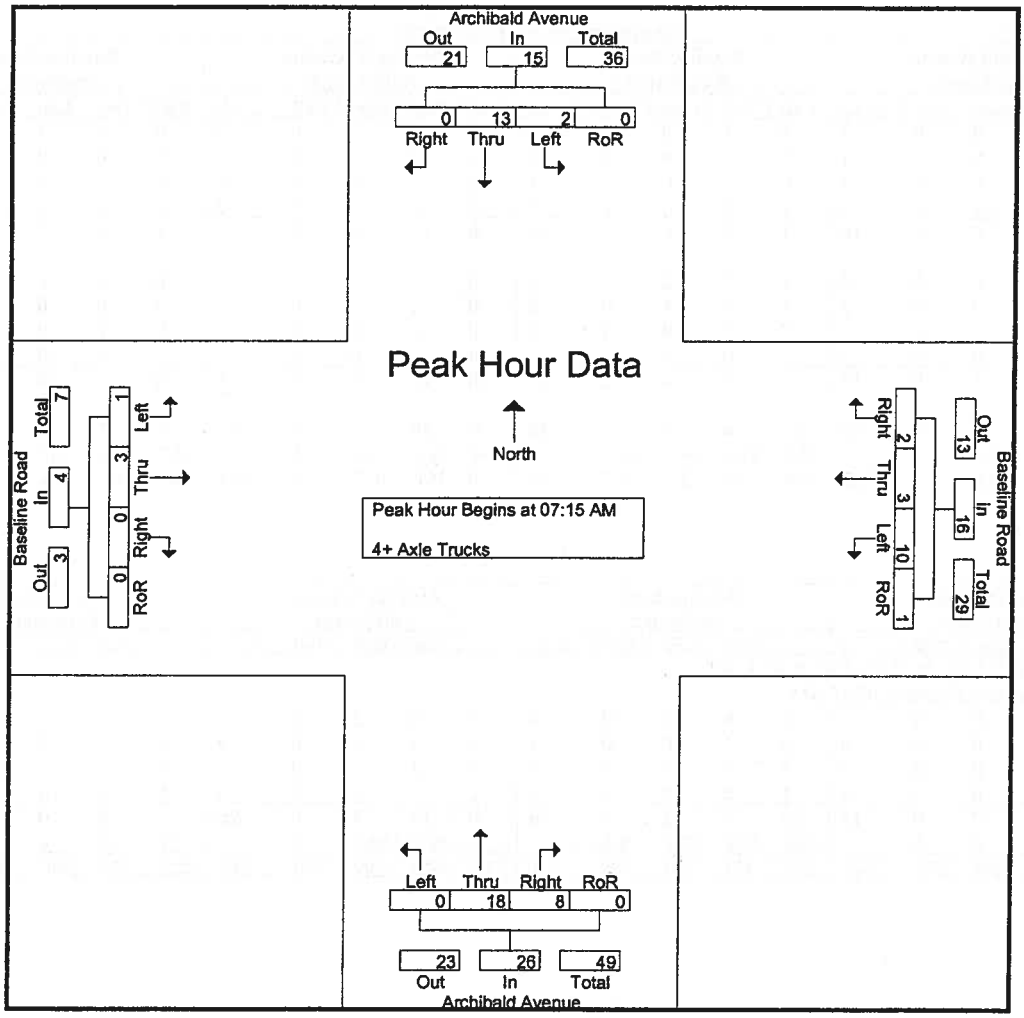

Peak Hour Analysis From 07:15 AM to 08:00 AM - Peak 1 of 1

Peak Hour for Each Approach Begins at:

	07:15 AM					07:15 AM					07:15 AM					07:15 AM				
+0 mins.	1	0	0	0	1	2	0	0	0	2	0	5	2	0	7	0	0	0	0	0
+15 mins.	0	8	0	0	8	0	1	0	0	1	0	4	4	0	8	0	1	0	0	1
+30 mins.	1	2	0	0	3	7	0	0	0	7	0	2	1	0	3	1	2	0	0	3
+45 mins.	0	3	0	0	3	1	2	2	1	6	0	7	1	0	8	0	0	0	0	0
Total Volume	2	13	0	0	15	10	3	2	1	16	0	18	8	0	26	1	3	0	0	4
% App. Total	13.3	86.7	0	0		62.5	18.8	12.5	6.2		0	69.2	30.8	0		25	75	0	0	
PHF	.500	.406	.000	.000	.469	.357	.375	.250	.250	.571	.000	.643	.500	.000	.813	.250	.375	.000	.000	.333

Counts Unlimited Inc.
25286 Jaclyn Avenue
Moreno Valley, CA 92557
951-485-7934

City of Rancho Cucamonga
N/S: Archibald Avenue
E/W: Baseline Road
Weather: Sunny

File Name : RNCAR4PM
Site Code : 9150063
Start Date : 5/28/2009
Page No : 1

Groups Printed- Passenger Vehicles - Large 2 Axle Vehicles - 3 Axle Vehicles - 4+ Axle Trucks

	Archibald Avenue Southbound					Baseline Road Westbound					Archibald Avenue Northbound					Baseline Road Eastbound					
Start Time	Left	Thru	Right	RoR	App. Total	Left	Thru	Right	RoR	App. Total	Left	Thru	Right	RoR	App. Total	Left	Thru	Right	RoR	App. Total	Int. Total
04:00 PM	28	212	7	15	262	46	84	15	15	160	30	257	13	1	301	13	66	20	4	103	826
04:15 PM	17	200	11	6	234	27	86	9	13	135	33	233	18	1	285	22	84	14	6	126	780
04:30 PM	26	281	11	10	328	52	80	6	27	165	28	231	13	8	280	14	72	22	0	108	881
04:45 PM	27	252	12	9	300	31	76	15	16	138	23	260	19	3	305	10	94	15	0	119	862
Total	98	945	41	40	1124	156	326	45	71	598	114	981	63	13	1171	59	316	71	10	456	3349
05:00 PM	34	244	7	8	293	78	118	4	15	215	30	222	15	1	268	17	88	18	4	127	903
05:15 PM	31	242	12	13	298	28	92	6	12	138	44	245	18	2	309	16	82	16	8	122	867
05:30 PM	23	175	12	10	220	33	110	18	8	169	26	223	8	2	259	14	75	9	2	100	748
05:45 PM	35	218	8	6	267	16	82	13	13	124	21	211	17	2	251	8	76	13	2	99	741
Total	123	879	39	37	1078	155	402	41	48	646	121	901	58	7	1087	55	321	56	16	448	3259
Grand Total	221	1824	80	77	2202	311	728	86	119	1244	235	1882	121	20	2258	114	637	127	26	904	6608
Apprch %	10	82.8	3.6	3.5		25	58.5	6.9	9.6		10.4	83.3	5.4	0.9		12.6	70.5	14	2.9		
Total %	3.3	27.6	1.2	1.2	33.3	4.7	11	1.3	1.8	18.8	3.6	28.5	1.8	0.3	34.2	1.7	9.6	1.9	0.4	13.7	
Passenger Vehicles		1761										1812									
% Passenger Vehicles	97.7	96.5	98.8	96.1	96.7	95.5	98.8	96.5	100	97.9	97.4	96.3	85.1	100	95.8	97.4	99.4	96.1	96.2	98.6	96.9
Large 2 Axle Vehicles																					
% Large 2 Axle Vehicles	0.9	1.2	0	2.6	1.2	0.3	0.4	2.3	0	0.5	1.7	2.1	5.8	0	2.2	0.9	0	2.4	3.8	0.6	1.3
3 Axle Vehicles	0	12	1	0	13	1	2	0	0	3	2	11	1	0	14	0	2	1	0	3	33
% 3 Axle Vehicles	0	0.7	1.2	0	0.6	0.3	0.3	0	0	0.2	0.9	0.6	0.8	0	0.6	0	0.3	0.8	0	0.3	0.5
4+ Axle Trucks	3	29	0	1	33	12	4	1	0	17	0	20	10	0	30	2	2	1	0	5	85
% 4+ Axle Trucks																					

	Archibald Avenue Southbound					Baseline Road Westbound					Archibald Avenue Northbound					Baseline Road Eastbound					
Start Time	Left	Thru	Right	RoR	App. Total	Left	Thru	Right	RoR	App. Total	Left	Thru	Right	RoR	App. Total	Left	Thru	Right	RoR	App. Total	Int. Total
Peak Hour Analysis From 04:00 PM to 05:45 PM - Peak 1 of 1																					
Peak Hour for Entire Intersection Begins at 04:30 PM																					
04:30 PM	26	**281**	11	10	**328**	52	80	6	**27**	165	28	231	13	**8**	280	14	72	**22**	0	108	881
04:45 PM	27	252	**12**	9	300	31	76	**15**	16	138	23	**260**	**19**	3	305	10	**94**	15	0	119	862
05:00 PM	**34**	244	7	8	293	**78**	**118**	4	15	**215**	30	222	15	1	268	**17**	88	18	4	**127**	**903**
05:15 PM	31	242	12	**13**	298	28	92	6	12	138	**44**	245	18	2	**309**	16	82	16	**8**	122	867
Total Volume	118	1019	42	40	1219	189	366	31	70	656	125	958	65	14	1162	57	336	71	12	476	3513
% App. Total	9.7	83.6	3.4	3.3		28.8	55.8	4.7	10.7		10.8	82.4	5.6	1.2		12	70.6	14.9	2.5		
PHF	.868	.907	.875	.769	.929	.606	.775	.517	.648	.763	.710	.921	.855	.438	.940	.838	.894	.807	.375	.937	.973

Counts Unlimited Inc.
25286 Jaclyn Avenue
Moreno Valley, CA 92557
951-485-7934

City of Rancho Cucamonga
N/S: Archibald Avenue
E/W: Baseline Road
Weather: Sunny

File Name : RNCAR4PM
Site Code : 9150063
Start Date : 5/28/2009
Page No : 2

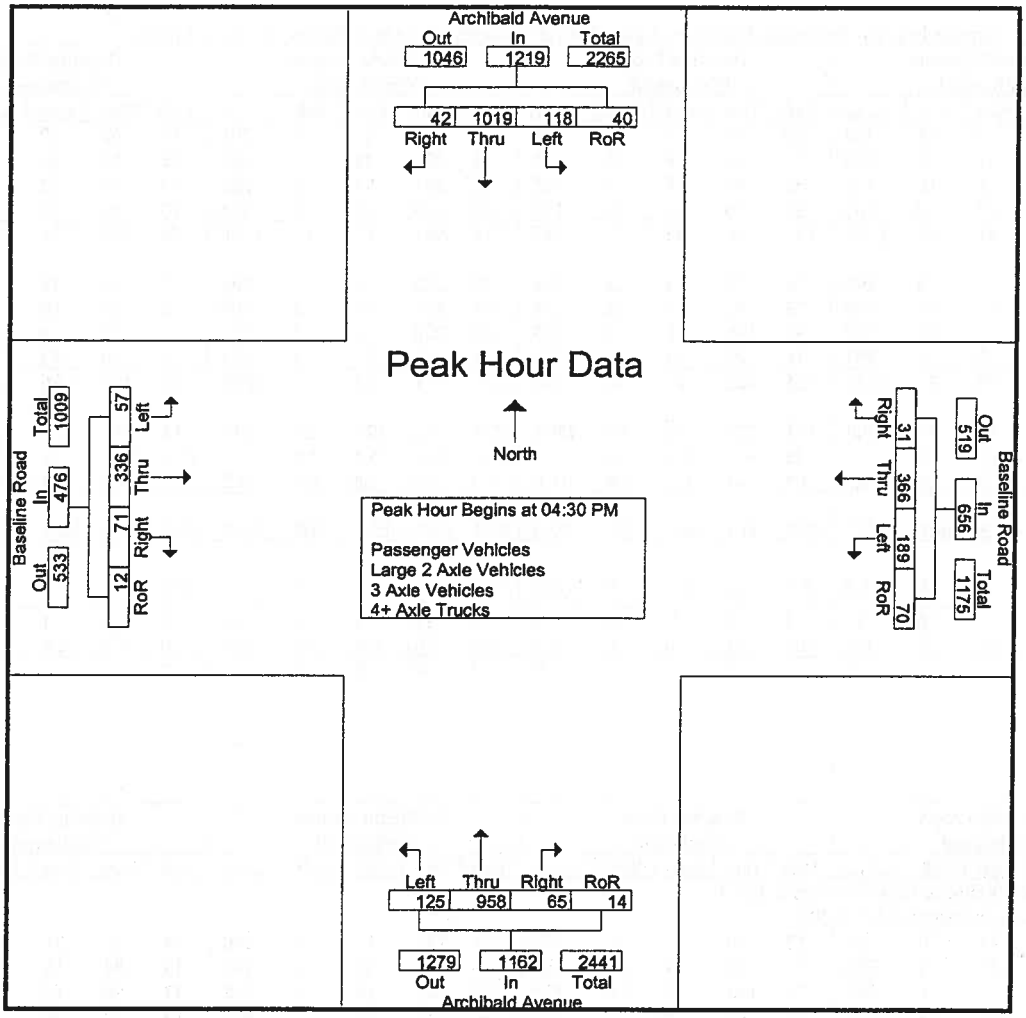

Peak Hour Analysis From 04:00 PM to 05:45 PM - Peak 1 of 1

Peak Hour for Each Approach Begins at:

	04:30 PM					04:45 PM					04:00 PM					04:15 PM				
+0 mins.	26	**281**	11	10	**328**	31	76	15	**16**	138	30	257	13	1	301	**22**	84	14	**6**	126
+15 mins.	27	252	**12**	9	300	**78**	**118**	4	15	**215**	**33**	233	18	1	285	14	72	**22**	0	108
+30 mins.	**34**	244	7	8	293	28	92	6	12	138	28	231	13	**8**	280	10	**94**	15	0	119
+45 mins.	31	242	12	**13**	298	33	110	**18**	8	169	23	**260**	**19**	3	**305**	17	88	18	4	**127**
Total Volume	118	1019	42	40	1219	170	396	43	51	660	114	981	63	13	1171	63	338	69	10	480
% App. Total	9.7	83.6	3.4	3.3		25.8	60	6.5	7.7		9.7	83.8	5.4	1.1		13.1	70.4	14.4	2.1	
PHF	.868	.907	.875	.769	.929	.545	.839	.597	.797	.767	.864	.943	.829	.406	.960	.716	.899	.784	.417	.945

Counts Unlimited Inc.
25286 Jaclyn Avenue
Moreno Valley, CA 92557
951-485-7934

City of Rancho Cucamonga
N/S: Archibald Avenue
E/W: Baseline Road
Weather: Sunny

File Name : RNCAR4PM
Site Code : 9150063
Start Date : 5/28/2009
Page No : 1

Groups Printed- Passenger Vehicles

	Archibald Avenue Southbound					Baseline Road Westbound					Archibald Avenue Northbound					Baseline Road Eastbound					
Start Time	Left	Thru	Right	RoR	App. Total	Left	Thru	Right	RoR	App. Total	Left	Thru	Right	RoR	App. Total	Left	Thru	Right	RoR	App. Total	Int. Total
04:00 PM	27	206	6	15	254	44	82	15	15	156	30	237	7	1	275	13	65	20	3	101	786
04:15 PM	17	186	11	6	220	24	85	7	13	129	32	221	15	1	269	20	83	14	6	123	741
04:30 PM	26	266	11	10	313	52	79	6	27	164	28	221	13	8	270	14	72	19	0	105	852
04:45 PM	25	242	12	8	287	27	76	15	16	134	22	251	17	3	293	10	94	15	0	119	833
Total	95	900	40	39	1074	147	322	43	71	583	112	930	52	13	1107	57	314	68	9	448	3212
05:00 PM	34	239	7	8	288	78	117	3	15	213	28	220	15	1	264	17	86	18	4	125	890
05:15 PM	31	233	12	13	289	27	92	6	12	137	43	241	16	2	302	15	82	16	8	121	849
05:30 PM	21	173	12	8	214	31	107	18	8	164	25	216	7	2	250	14	75	8	2	99	727
05:45 PM	35	216	8	6	265	14	81	13	13	121	21	205	13	2	241	8	76	12	2	98	725
Total	121	861	39	35	1056	150	397	40	48	635	117	882	51	7	1057	54	319	54	16	443	3191
Grand Total	216	1761	79	74	2130	297	719	83	119	1218	229	1812	103	20	2164	111	633	122	25	891	6403
Apprch %	10.1	82.7	3.7	3.5		24.4	59	6.8	9.8		10.6	83.7	4.8	0.9		12.5	71	13.7	2.8		
Total %	3.4	27.5	1.2	1.2	33.3	4.6	11.2	1.3	1.9	19	3.6	28.3	1.6	0.3	33.8	1.7	9.9	1.9	0.4	13.9	

	Archibald Avenue Southbound					Baseline Road Westbound					Archibald Avenue Northbound					Baseline Road Eastbound					
Start Time	Left	Thru	Right	RoR	App. Total		Thru	Right	RoR	App. Total		Thru	Right	RoR	App. Total		Thru	Right	RoR	App. Total	Int. Total
Peak Hour Analysis From 04:30 PM to 05:15 PM - Peak 1 of 1																					
Peak Hour for Entire Intersection Begins at 04:30 PM																					
04:30 PM	26	**266**	11	10	**313**	52	79	6	**27**	164	28	221	13	**8**	270	14	72	19	0	105	852
04:45 PM	25	242	**12**	8	287	27	76	**15**	16	134	22	**251**	**17**	3	293	10	94	15	0	119	833
05:00 PM	**34**	239	7	8	288	**78**	**117**	3	15	**213**	28	220	15	1	264	**17**	86	18	4	**125**	**890**
05:15 PM	31	233	12	**13**	289	27	92	6	12	137	43	241	16	2	**302**	15	82	16	**8**	121	849
Total Volume	116	980	42	39	1177	184	364	30	70	648	121	933	61	14	1129	56	334	68	12	470	3424
% App. Total	9.9	83.3	3.6	3.3		28.4	56.2	4.6	10.8		10.7	82.6	5.4	1.2		11.9	71.1	14.5	2.6		
PHF	.853	.921	.875	.750	.940	.590	.778	.500	.648	.761	.703	.929	.897	.438	.935	.824	.888	.895	.375	.940	.962

Counts Unlimited Inc.
25286 Jaclyn Avenue
Moreno Valley, CA 92557
951-485-7934

City of Rancho Cucamonga
N/S: Archibald Avenue
E/W: Baseline Road
Weather: Sunny

File Name : RNCAR4PM
Site Code : 9150063
Start Date : 5/28/2009
Page No : 2

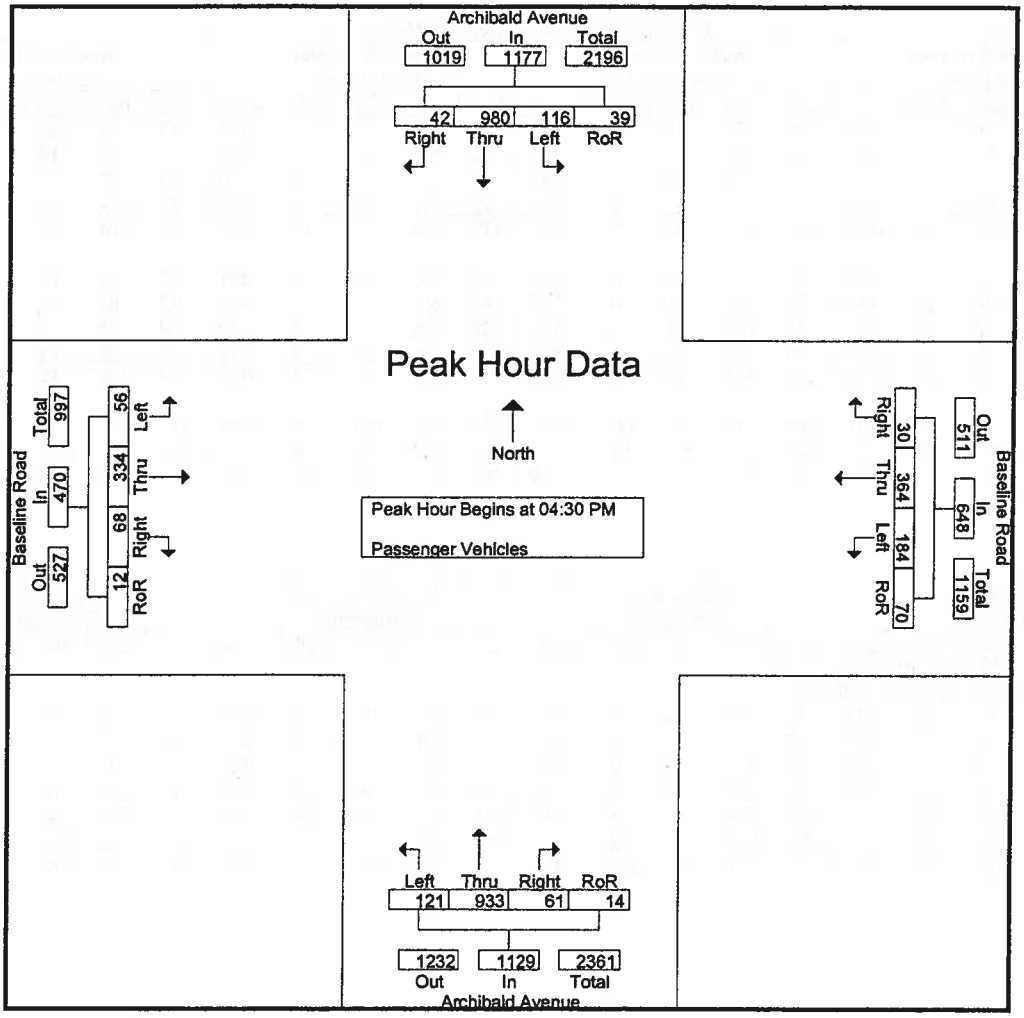

Peak Hour Analysis From 04:30 PM to 05:15 PM - Peak 1 of 1

Peak Hour for Each Approach Begins at:

	04:30 PM					04:30 PM					04:30 PM					04:30 PM				
+0 mins.	26	**266**	11	10	**313**	52	79	6	**27**	164	28	221	13	**8**	270	14	72	**19**	0	105
+15 mins.	25	242	**12**	8	287	27	76	**15**	16	134	22	**251**	**17**	3	293	10	**94**	15	0	119
+30 mins.	**34**	239	7	8	288	**78**	**117**	3	15	**213**	28	220	15	1	264	**17**	86	18	4	**125**
+45 mins.	31	233	12	**13**	289	27	92	6	12	137	**43**	241	16	2	**302**	15	82	16	**8**	121
Total Volume	116	980	42	39	1177	184	364	30	70	648	121	933	61	14	1129	56	334	68	12	470
% App. Total	9.9	83.3	3.6	3.3		28.4	56.2	4.6	10.8		10.7	82.6	5.4	1.2		11.9	71.1	14.5	2.6	
PHF	.853	.921	.875	.750	.940	.590	.778	.500	.648	.761	.703	.929	.897	.438	.935	.824	.888	.895	.375	.940

Counts Unlimited Inc.
25286 Jaclyn Avenue
Moreno Valley, CA 92557
951-485-7934

City of Rancho Cucamonga
N/S: Archibald Avenue
E/W: Baseline Road
Weather: Sunny

File Name : RNCAR4PM
Site Code : 9150063
Start Date : 5/28/2009
Page No : 1

Groups Printed- Large 2 Axle Vehicles

	Archibald Avenue Southbound					Baseline Road Westbound					Archibald Avenue Northbound					Baseline Road Eastbound					
Start Time	Left	Thru	Right	RoR	App. Total	Left	Thru	Right	RoR	App. Total	Left	Thru	Right	RoR	App. Total	Left	Thru	Right	RoR	App. Total	Int. Total
04:00 PM	1	1	0	0	2	0	1	0	0	1	0	12	5	0	17	0	0	0	1	1	21
04:15 PM	0	6	0	0	6	0	0	2	0	2	1	8	2	0	11	0	0	0	0	0	19
04:30 PM	0	5	0	0	5	0	0	0	0	0	0	5	0	0	5	0	0	2	0	2	12
04:45 PM	0	3	0	1	4	0	0	0	0	0	0	7	0	0	7	0	0	0	0	0	11
Total	1	15	0	1	17	0	1	2	0	3	1	32	7	0	40	0	0	2	1	3	63
05:00 PM	0	2	0	0	2	0	0	0	0	0	2	1	0	0	3	0	0	0	0	0	5
05:15 PM	0	2	0	0	2	0	0	0	0	0	1	1	0	0	2	1	0	0	0	1	5
05:30 PM	1	1	0	1	3	0	1	0	0	1	0	3	0	0	3	0	0	1	0	1	8
05:45 PM	0	2	0	0	2	1	1	0	0	2	0	2	0	0	2	0	0	0	0	0	6
Total	1	7	0	1	9	1	2	0	0	3	3	7	0	0	10	1	0	1	0	2	24
Grand Total	2	22	0	2	26	1	3	2	0	6	4	39	7	0	50	1	0	3	1	5	87
Apprch %	7.7	84.6	0	7.7		16.7	50	33.3	0		8	78	14	0		20	0	60	20		
Total %	2.3	25.3	0	2.3	29.9	1.1	3.4	2.3	0	6.9	4.6	44.8	8	0	57.5	1.1	0	3.4	1.1	5.7	

	Archibald Avenue Southbound					Baseline Road Westbound					Archibald Avenue Northbound					Baseline Road Eastbound					
Start Time	Left	Thru	Right	RoR	App. Total		Thru	Right	RoR	App. Total		Thru	Right	RoR	App. Total		Thru	Right	RoR	App. Total	Int. Total
Peak Hour Analysis From 04:30 PM to 05:15 PM - Peak 1 of 1																					
Peak Hour for Entire Intersection Begins at 04:30 PM																					
04:30 PM	0	5	0	0	5	0	0	0	0	0	0	5	0	0	5	0	0	2	0	2	12
04:45 PM	0	3	0	1	4	0	0	0	0	0	0	7	0	0	7	0	0	0	0	0	11
05:00 PM	0	2	0	0	2	0	0	0	0	0	2	1	0	0	3	0	0	0	0	0	5
05:15 PM	0	2	0	0	2	0	0	0	0	0	1	1	0	0	2	1	0	0	0	1	5
Total Volume	0	12	0	1	13	0	0	0	0	0	3	14	0	0	17	1	0	2	0	3	33
% App. Total	0	92.3	0	7.7		0	0	0	0		17.6	82.4	0	0		33.3	0	66.7	0		
PHF	.000	.600	.000	.250	.650	.000	.000	.000	.000	.000	.375	.500	.000	.000	.607	.250	.000	.250	.000	.375	.688

Counts Unlimited Inc.
25286 Jaclyn Avenue
Moreno Valley, CA 92557
951-485-7934

City of Rancho Cucamonga
N/S: Archibald Avenue
E/W: Baseline Road
Weather: Sunny

File Name : RNCAR4PM
Site Code : 9150063
Start Date : 5/28/2009
Page No : 2

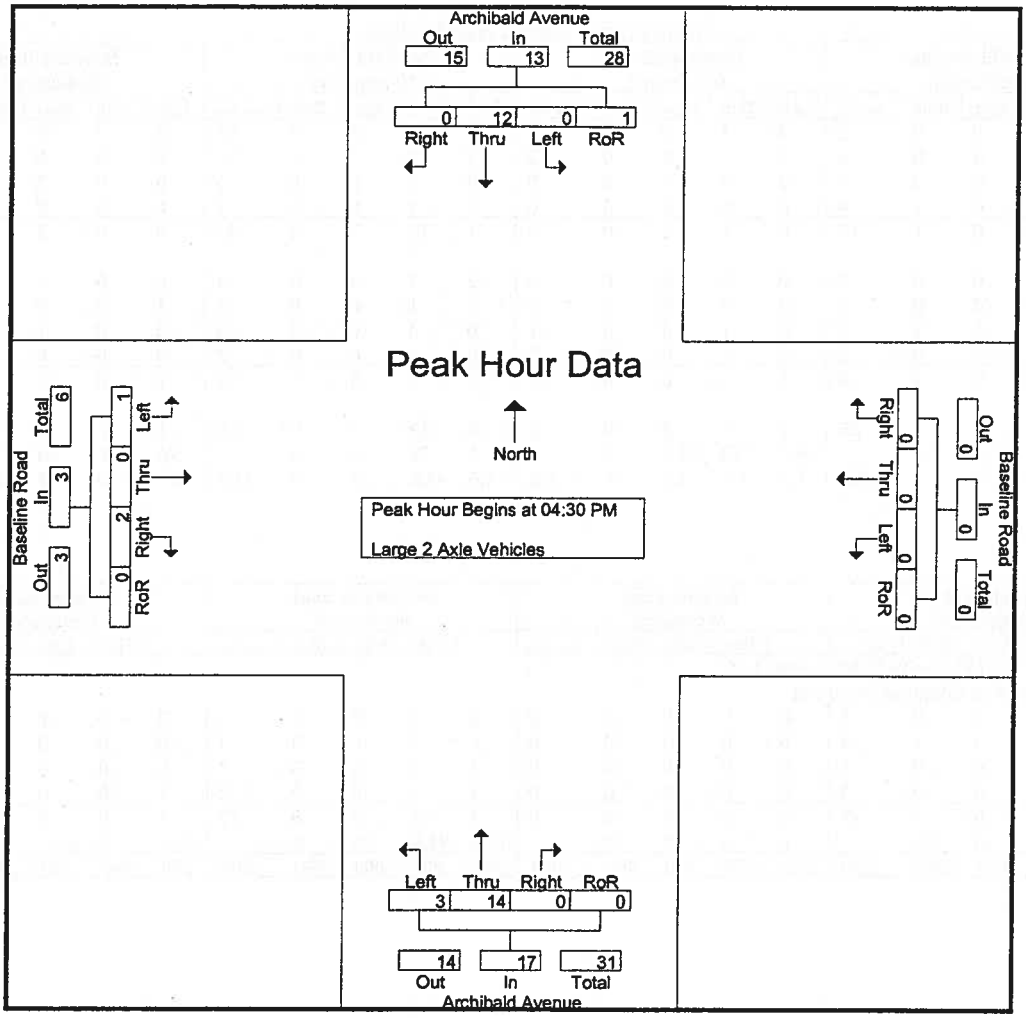

Peak Hour Analysis From 04:30 PM to 05:15 PM - Peak 1 of 1

Peak Hour for Each Approach Begins at:

	04:30 PM					04:30 PM					04:30 PM					04:30 PM				
+0 mins.	0	5	0	0	5	0	0	0	0	0	0	5	0	0	5	0	0	2	0	2
+15 mins.	0	3	0	1	4	0	0	0	0	0	0	7	0	0	7	0	0	0	0	0
+30 mins.	0	2	0	0	2	0	0	0	0	0	2	1	0	0	3	0	0	0	0	0
+45 mins.	0	2	0	0	2	0	0	0	0	0	1	1	0	0	2	1	0	0	0	1
Total Volume	0	12	0	1	13	0	0	0	0	0	3	14	0	0	17	1	0	2	0	3
% App. Total	0	92.3	0	7.7		0	0	0	0		17.6	82.4	0	0		33.3	0	66.7	0	
PHF	.000	.600	.000	.250	.650	.000	.000	.000	.000	.000	.375	.500	.000	.000	.607	.250	.000	.250	.000	.375

Counts Unlimited Inc.
25286 Jaclyn Avenue
Moreno Valley, CA 92557
951-485-7934

City of Rancho Cucamonga
N/S: Archibald Avenue
E/W: Baseline Road
Weather: Sunny

File Name : RNCAR4PM
Site Code : 9150063
Start Date : 5/28/2009
Page No : 1

Groups Printed- 3 Axle Vehicles

	Archibald Avenue Southbound					Baseline Road Westbound					Archibald Avenue Northbound					Baseline Road Eastbound					
Start Time	Left	Thru	Right	RoR	App. Total	Left	Thru	Right	RoR	App. Total	Left	Thru	Right	RoR	App. Total	Left	Thru	Right	RoR	App. Total	Int. Total
04:00 PM	0	3	1	0	4	0	0	0	0	0	0	4	0	0	4	0	0	0	0	0	8
04:15 PM	0	1	0	0	1	1	0	0	0	1	0	1	0	0	1	0	1	0	0	1	4
04:30 PM	0	3	0	0	3	0	1	0	0	1	0	1	0	0	1	0	0	1	0	1	6
04:45 PM	0	2	0	0	2	0	0	0	0	0	1	1	0	0	2	0	0	0	0	0	4
Total	0	9	1	0	10	1	1	0	0	2	1	7	0	0	8	0	1	1	0	2	22
05:00 PM	0	1	0	0	1	0	1	0	0	1	0	0	0	0	0	0	1	0	0	1	3
05:15 PM	0	2	0	0	2	0	0	0	0	0	0	2	1	0	3	0	0	0	0	0	5
05:30 PM	0	0	0	0	0	0	0	0	0	0	1	1	0	0	2	0	0	0	0	0	2
05:45 PM	0	0	0	0	0	0	0	0	0	0	0	1	0	0	1	0	0	0	0	0	1
Total	0	3	0	0	3	0	1	0	0	1	1	4	1	0	6	0	1	0	0	1	11
Grand Total	0	12	1	0	13	1	2	0	0	3	2	11	1	0	14	0	2	1	0	3	33
Apprch %	0	92.3	7.7	0		33.3	66.7	0	0		14.3	78.6	7.1	0		0	66.7	33.3	0		
Total %	0	36.4	3	0	39.4	3	6.1	0	0	9.1	6.1	33.3	3	0	42.4	0	6.1	3	0	9.1	

	Archibald Avenue Southbound					Baseline Road Westbound					Archibald Avenue Northbound					Baseline Road Eastbound					
Start Time	Left	Thru	Right	RoR	App. Total		Thru	Right	RoR	App. Total		Thru	Right	RoR	App. Total		Thru	Right	RoR	App. Total	Int. Total
Peak Hour Analysis From 04:30 PM to 05:15 PM - Peak 1 of 1																					
Peak Hour for Entire Intersection Begins at 04:30 PM																					
04:30 PM	0	3	0	0	3	0	1	0	0	1	0	1	0	0	1	0	0	1	0	1	6
04:45 PM	0	2	0	0	2	0	0	0	0	0	1	1	0	0	2	0	0	0	0	0	4
05:00 PM	0	1	0	0	1	0	1	0	0	1	0	0	0	0	0	0	1	0	0	1	3
05:15 PM	0	2	0	0	2	0	0	0	0	0	0	2	1	0	3	0	0	0	0	0	5
Total Volume	0	8	0	0	8	0	2	0	0	2	1	4	1	0	6	0	1	1	0	2	18
% App. Total	0	100	0	0		0	100	0	0		16.7	66.7	16.7	0		0	50	50	0		
PHF	.000	.667	.000	.000	.667	.000	.500	.000	.000	.500	.250	.500	.250	.000	.500	.000	.250	.250	.000	.500	.750

Counts Unlimited Inc.
25286 Jaclyn Avenue
Moreno Valley, CA 92557
951-485-7934

City of Rancho Cucamonga
N/S: Archibald Avenue
E/W: Baseline Road
Weather: Sunny

File Name : RNCAR4PM
Site Code : 9150063
Start Date : 5/28/2009
Page No : 2

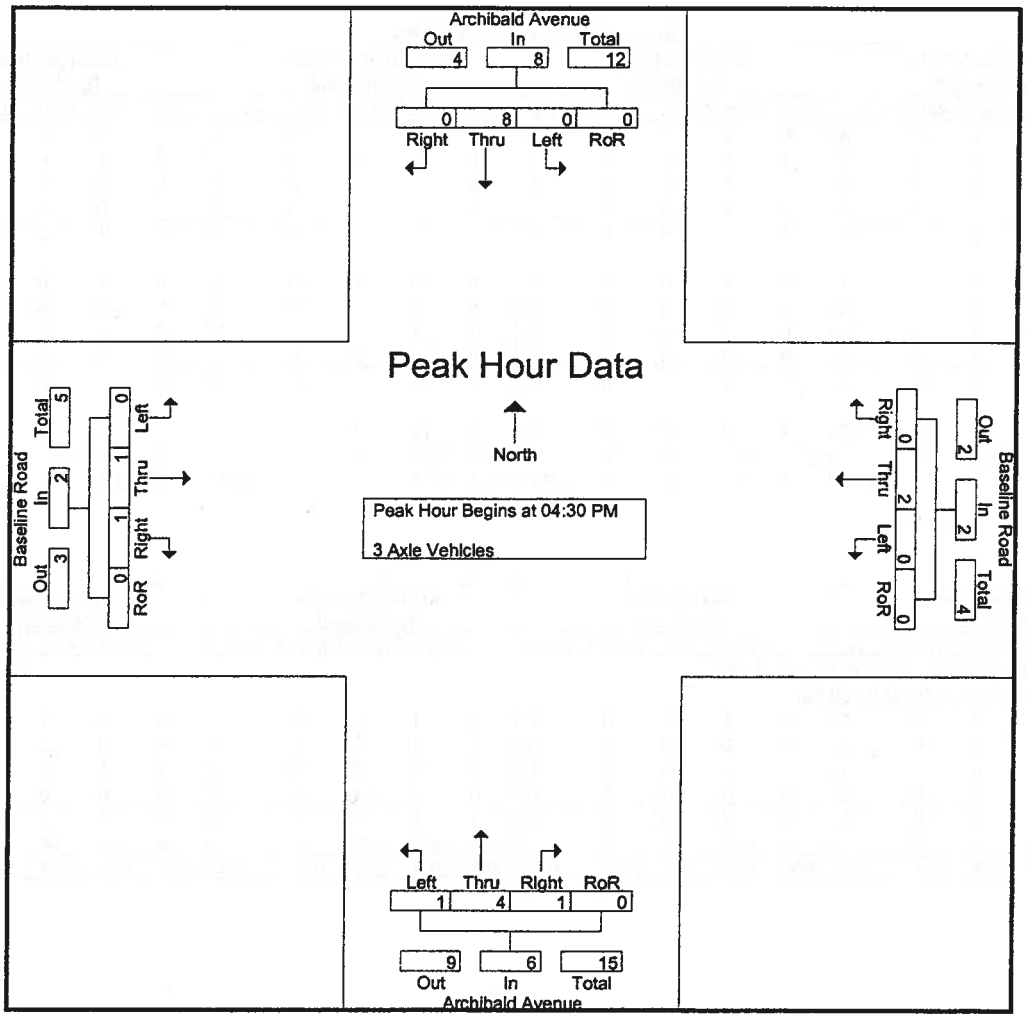

Peak Hour Analysis From 04:30 PM to 05:15 PM - Peak 1 of 1

Peak Hour for Each Approach Begins at:

	04:30 PM					04:30 PM					04:30 PM					04:30 PM				
+0 mins.	0	3	0	0	3	0	1	0	0	1	0	1	0	0	1	0	0	1	0	1
+15 mins.	0	2	0	0	2	0	0	0	0	0	1	1	0	0	2	0	0	0	0	0
+30 mins.	0	1	0	0	1	0	1	0	0	1	0	0	0	0	0	0	1	0	0	1
+45 mins.	0	2	0	0	2	0	0	0	0	0	0	2	1	0	3	0	0	0	0	0
Total Volume	0	8	0	0	8	0	2	0	0	2	1	4	1	0	6	0	1	1	0	2
% App. Total	0	100	0	0		0	100	0	0		16.7	66.7	16.7	0		0	50	50	0	
PHF	.000	.667	.000	.000	.667	.000	.500	.000	.000	.500	.250	.500	.250	.000	.500	.000	.250	.250	.000	.500

Counts Unlimited Inc.
25286 Jaclyn Avenue
Moreno Valley, CA 92557
951-485-7934

City of Rancho Cucamonga
N/S: Archibald Avenue
E/W: Baseline Road
Weather: Sunny

File Name : RNCAR4PM
Site Code : 9150063
Start Date : 5/28/2009
Page No : 1

Groups Printed- 4+ Axle Trucks

	Archibald Avenue Southbound					Baseline Road Westbound					Archibald Avenue Northbound					Baseline Road Eastbound					
Start Time	Left	Thru	Right	RoR	App. Total	Left	Thru	Right	RoR	App. Total	Left	Thru	Right	RoR	App. Total	Left	Thru	Right	RoR	App. Total	Int. Total
04:00 PM	0	2	0	0	2	2	1	0	0	3	0	4	1	0	5	0	1	0	0	1	11
04:15 PM	0	7	0	0	7	2	1	0	0	3	0	3	1	0	4	2	0	0	0	2	16
04:30 PM	0	7	0	0	7	0	0	0	0	0	0	4	0	0	4	0	0	0	0	0	11
04:45 PM	2	5	0	0	7	4	0	0	0	4	0	1	2	0	3	0	0	0	0	0	14
Total	2	21	0	0	23	8	2	0	0	10	0	12	4	0	16	2	1	0	0	3	52
05:00 PM	0	2	0	0	2	0	0	1	0	1	0	1	0	0	1	0	1	0	0	1	5
05:15 PM	0	5	0	0	5	1	0	0	0	1	0	1	1	0	2	0	0	0	0	0	8
05:30 PM	1	1	0	1	3	2	2	0	0	4	0	3	1	0	4	0	0	0	0	0	11
05:45 PM	0	0	0	0	0	1	0	0	0	1	0	3	4	0	7	0	0	1	0	1	9
Total	1	8	0	1	10	4	2	1	0	7	0	8	6	0	14	0	1	1	0	2	33
Grand Total	3	29	0	1	33	12	4	1	0	17	0	20	10	0	30	2	2	1	0	5	85
Apprch %	9.1	87.9	0	3		70.6	23.5	5.9	0		0	66.7	33.3	0		40	40	20	0		
Total %	3.5	34.1	0	1.2	38.8	14.1	4.7	1.2	0	20	0	23.5	11.8	0	35.3	2.4	2.4	1.2	0	5.9	

	Archibald Avenue Southbound					Baseline Road Westbound					Archibald Avenue Northbound					Baseline Road Eastbound					
Start Time	Left	Thru	Right	RoR	App. Total		Thru	Right	RoR	App. Total		Thru	Right	RoR	App. Total		Thru	Right	RoR	App. Total	Int. Total
Peak Hour Analysis From 04:30 PM to 05:15 PM - Peak 1 of 1																					
Peak Hour for Entire Intersection Begins at 04:30 PM																					
04:30 PM	0	7	0	0	7	0	0	0	0	0	0	4	0	0	4	0	0	0	0	0	11
04:45 PM	2	5	0	0	7	4	0	0	0	4	0	1	2	0	3	0	0	0	0	0	14
05:00 PM	0	2	0	0	2	0	0	1	0	1	0	1	0	0	1	0	1	0	0	1	5
05:15 PM	0	5	0	0	5	1	0	0	0	1	0	1	1	0	2	0	0	0	0	0	8
Total Volume	2	19	0	0	21	5	0	1	0	6	0	7	3	0	10	0	1	0	0	1	38
% App. Total	9.5	90.5	0	0		83.3	0	16.7	0		0	70	30	0		0	100	0	0		
PHF	.250	.679	.000	.000	.750	.313	.000	.250	.000	.375	.000	.438	.375	.000	.625	.000	.250	.000	.000	.250	.679

Counts Unlimited Inc.
25286 Jaclyn Avenue
Moreno Valley, CA 92557
951-485-7934

City of Rancho Cucamonga
N/S: Archibald Avenue
E/W: Baseline Road
Weather: Sunny

File Name : RNCAR4PM
Site Code : 9150063
Start Date : 5/28/2009
Page No : 2

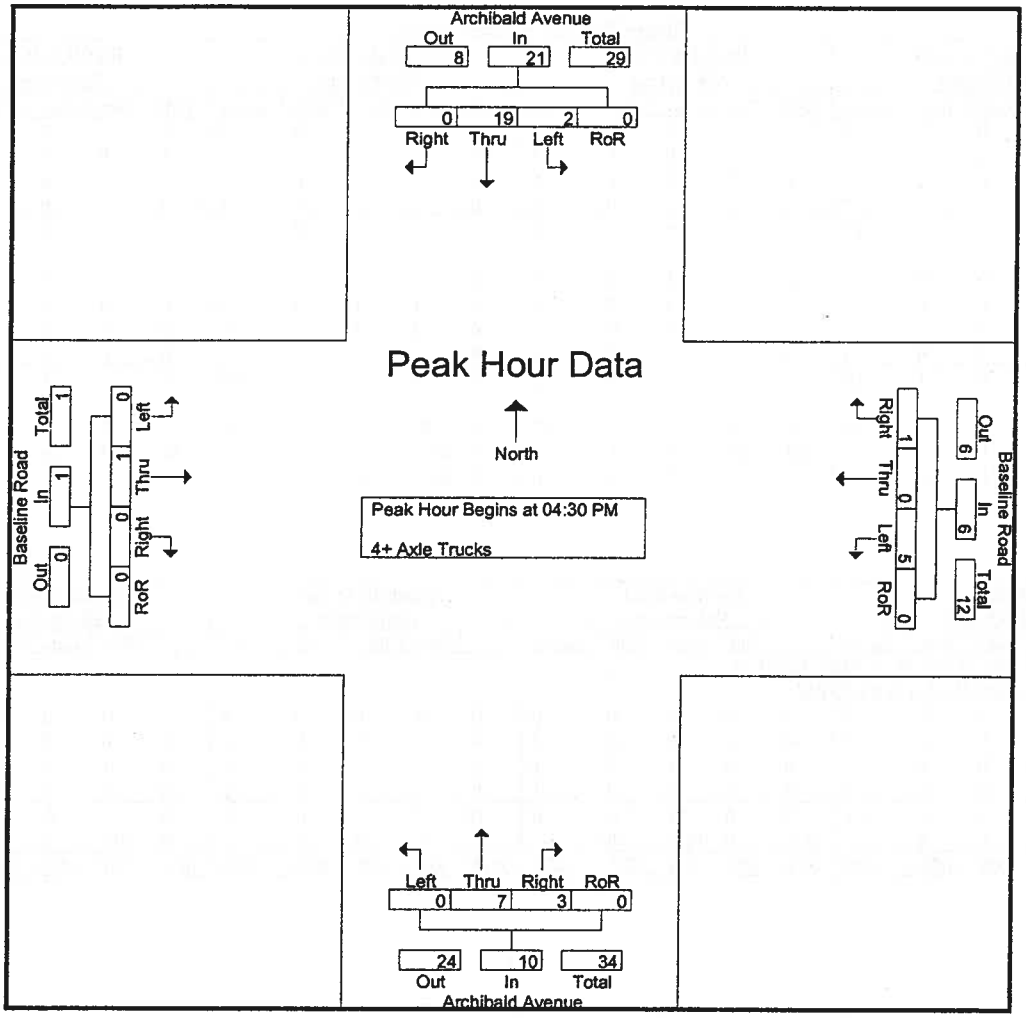

Peak Hour Analysis From 04:30 PM to 05:15 PM - Peak 1 of 1

Peak Hour for Each Approach Begins at:

	04:30 PM					04:30 PM					04:30 PM					04:30 PM				
+0 mins.	0	7	0	0	7	0	0	0	0	0	0	4	0	0	4	0	0	0	0	0
+15 mins.	2	5	0	0	7	4	0	0	0	4	0	1	2	0	3	0	0	0	0	0
+30 mins.	0	2	0	0	2	0	0	1	0	1	0	1	0	0	1	0	1	0	0	1
+45 mins.	0	5	0	0	5	1	0	0	0	1	0	1	1	0	2	0	0	0	0	0
Total Volume	2	19	0	0	21	5	0	1	0	6	0	7	3	0	10	0	1	0	0	1
% App. Total	9.5	90.5	0	0		83.3	0	16.7	0		0	70	30	0		0	100	0	0	
PHF	.250	.679	.000	.000	.750	.313	.000	.250	.000	.375	.000	.438	.375	.000	.625	.000	.250	.000	.000	.250

PASSENGER CAR EQUIVALENCY PEAK HOUR COUNT SUMMARY

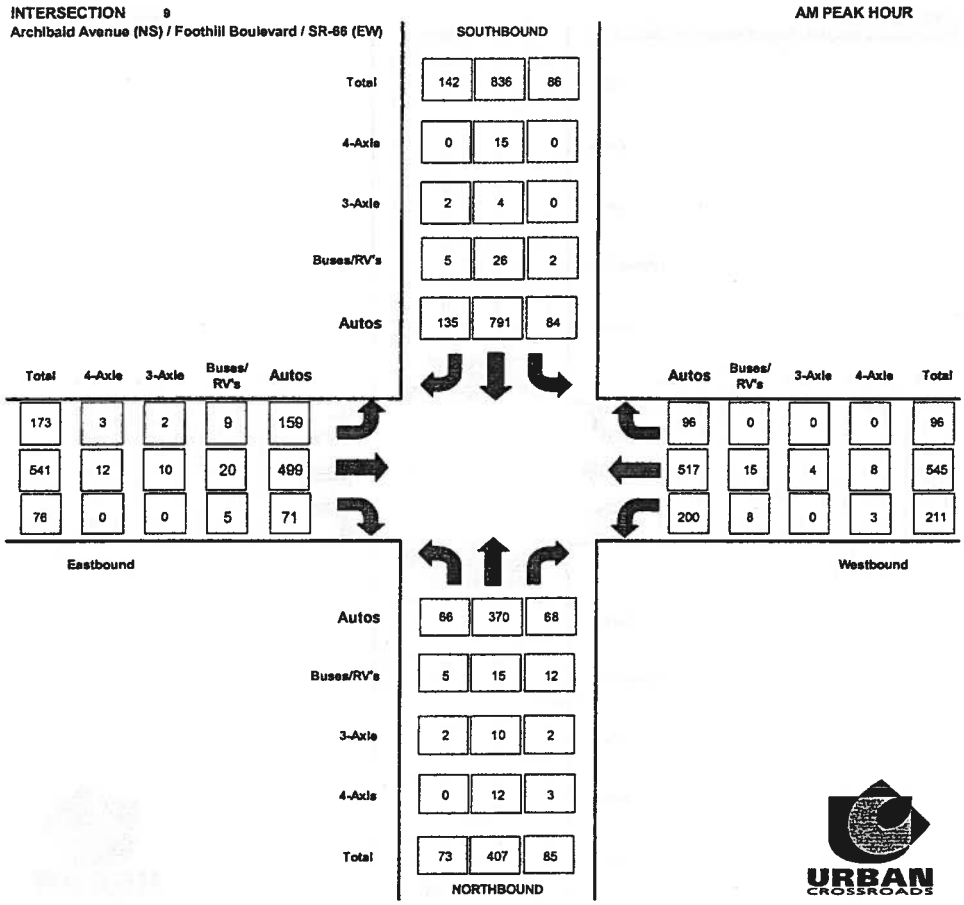

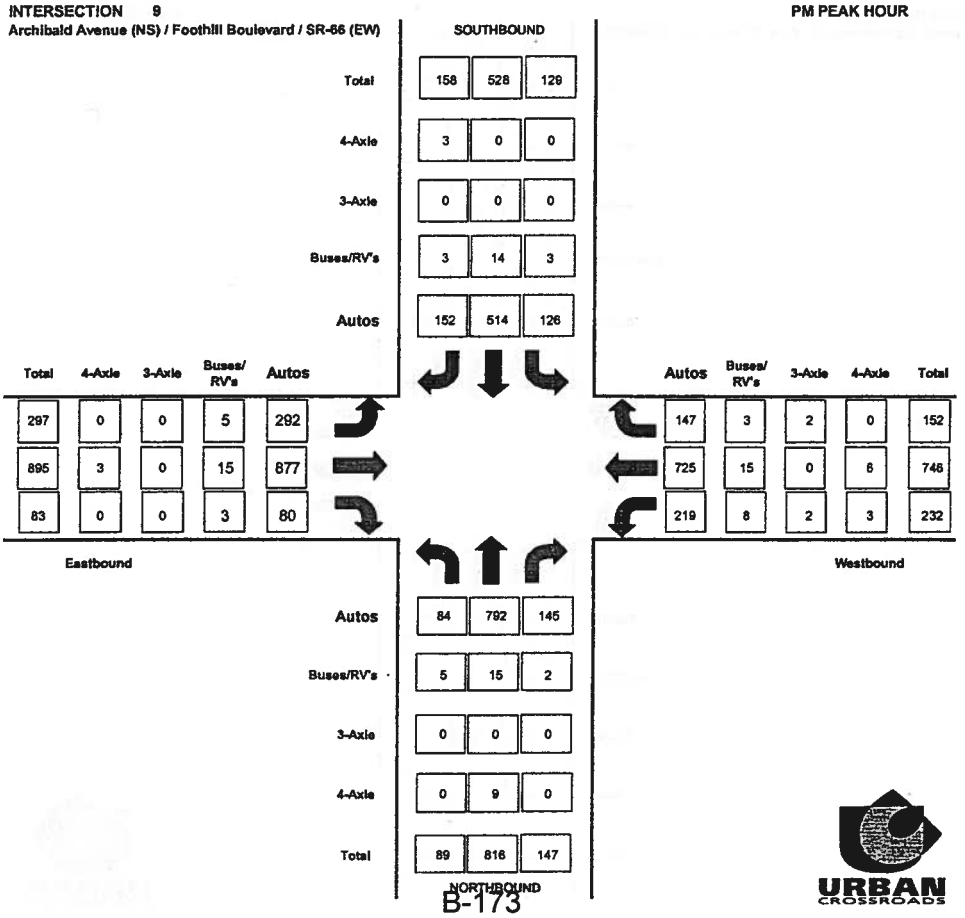

RAW PEAK HOUR COUNT SUMMARY

INTERSECTION 9
Archibald Avenue (NS) / Foothill Boulevard / SR-66 (EW)

AM PEAK HOUR

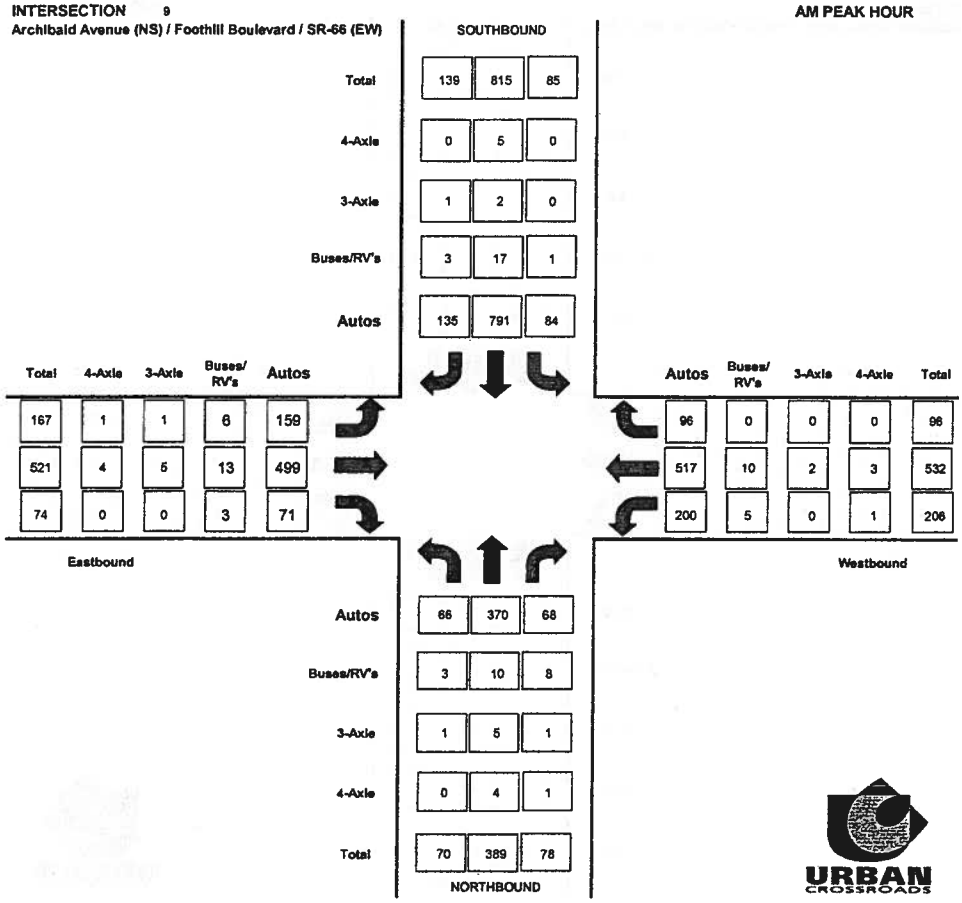

INTERSECTION 9
Archibald Avenue (NS) / Foothill Boulevard / SR-66 (EW)

PM PEAK HOUR

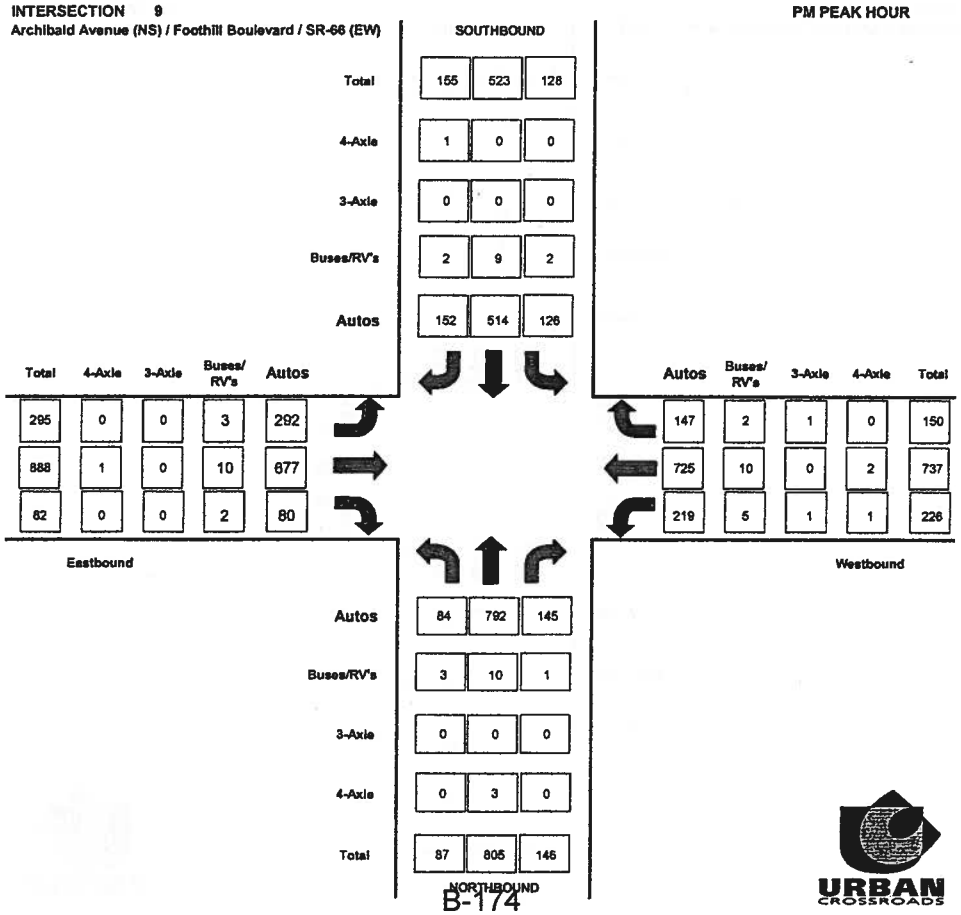

U:\Jobs_05800-07000\06700-06799\Excel-Editing Vols-2 Graphics Summary_Non PCE

Counts Unlimited Inc.
25286 Jaclyn Avenue
Moreno Valley, CA 92557
951-485-7934

9

City of Rancho Cucamonga
N/S: Archibald Avenue
E/W: Foothill Boulevard
Weather: Sunny

File Name : RNCARFOAM
Site Code : 9150066
Start Date : 5/28/2009
Page No : 1

Groups Printed- Passenger Vehicles - Large 2 Axle Vehicles - 3 Axle Vehicles - 4+ Axle Trucks

	Archibald Avenue Southbound					Foothill Boulevard Westbound					Archibald Avenue Northbound					Foothill Boulevard Eastbound					
Start Time	Left	Thru	Right	RoR	App. Total	Left	Thru	Right	RoR	App. Total	Left	Thru	Right	RoR	App. Total	Left	Thru	Right	RoR	App. Total	Int. Total
07:00 AM	18	147	5	19	189	27	87	7	7	128	6	76	9	4	95	17	65	10	6	98	510
07:15 AM	12	188	19	14	233	48	115	6	13	182	19	120	11	2	152	32	74	8	3	117	684
07:30 AM	16	233	32	18	299	42	127	7	11	187	12	121	18	5	156	35	127	9	10	181	823
07:45 AM	23	237	25	12	297	63	141	6	10	220	19	75	13	5	112	35	132	9	5	181	810
Total	69	805	81	63	1018	180	470	26	41	717	56	392	51	16	515	119	398	36	24	577	2827
08:00 AM	24	199	8	18	249	52	140	18	17	227	20	88	12	2	122	44	138	14	7	203	801
08:15 AM	22	146	18	8	194	49	124	15	12	200	19	105	19	4	147	53	124	10	10	197	738
08:30 AM	21	179	20	8	228	47	105	11	4	167	21	81	17	8	127	43	117	10	10	180	702
08:45 AM	20	160	18	17	215	43	116	12	5	176	16	89	11	4	120	45	111	6	5	167	678
Total	87	684	64	51	886	191	485	56	38	770	76	363	59	18	516	185	490	40	32	747	2919
Grand Total	156	1489	145	114	1904	371	955	82	79	1487	132	755	110	34	1031	304	888	76	56	1324	5746
Apprch %	8.2	78.2	7.6	6		24.9	64.2	5.5	5.3		12.8	73.2	10.7	3.3		23	67.1	5.7	4.2		
Total %	2.7	25.9	2.5	2	33.1	6.5	16.6	1.4	1.4	25.9	2.3	13.1	1.9	0.6	17.9	5.3	15.5	1.3	1	23	
Passenger Vehicles		1453																			
% Passenger Vehicles	98.7	97.6	96.6	97.4	97.6	96.2	96.1	96.3	100	96.4	94.7	95.4	88.2	94.1	94.5	95.7	95.5	93.4	100	95.6	96.3
Large 2 Axle Vehicles																					
% Large 2 Axle Vehicles	0.6	1.7	2.1	1.8	1.6	3	3.2	2.4	0	3	4.5	2.9	9.1	5.9	3.9	3.3	3.3	5.3	0	3.2	2.7
3 Axle Vehicles	0	5	1	1	7	1	2	1	0	4	1	8	2	0	11	1	7	0	0	8	30
% 3 Axle Vehicles	0	0.3	0.7	0.9	0.4	0.3	0.2	1.2	0	0.3	0.8	1.1	1.8	0	1.1	0.3	0.8	0	0	0.6	0.5
4+ Axle Trucks	1	6	1	0	8	2	4	0	0	6	0	5	1	0	6	2	4	1	0	7	27
% 4+ Axle Trucks																					

	Archibald Avenue Southbound					Foothill Boulevard Westbound					Archibald Avenue Northbound					Foothill Boulevard Eastbound					
Start Time	Left	Thru	Right	RoR	App. Total	Left	Thru	Right	RoR	App. Total	Left	Thru	Right	RoR	App. Total	Left	Thru	Right	RoR	App. Total	Int. Total
Peak Hour Analysis From 07:00 AM to 08:45 AM - Peak 1 of 1																					
Peak Hour for Entire Intersection Begins at 07:30 AM																					
07:30 AM	16	233	**32**	**18**	**299**	42	127	7	11	187	12	**121**	18	**5**	**156**	35	127	9	**10**	181	**823**
07:45 AM	23	**237**	25	12	297	**63**	**141**	6	10	220	19	75	13	5	112	35	132	9	5	181	810
08:00 AM	**24**	199	8	18	249	52	140	**18**	**17**	**227**	**20**	88	12	2	122	44	**138**	**14**	7	**203**	801
08:15 AM	22	146	18	8	194	49	124	15	12	200	19	105	**19**	4	147	**53**	124	10	10	197	738
Total Volume	85	815	83	56	1039	206	532	46	50	834	70	389	62	16	537	167	521	42	32	762	3172
% App. Total	8.2	78.4	8	5.4		24.7	63.8	5.5	6		13	72.4	11.5	3		21.9	68.4	5.5	4.2		
PHF	.885	.860	.648	.778	.869	.817	.943	.639	.735	.919	.875	.804	.816	.800	.861	.788	.944	.750	.800	.938	.964

Counts Unlimited Inc.
25286 Jaclyn Avenue
Moreno Valley, CA 92557
951-485-7934

City of Rancho Cucamonga
N/S: Archibald Avenue
E/W: Foothill Boulevard
Weather: Sunny

File Name : RNCARFOAM
Site Code : 9150066
Start Date : 5/28/2009
Page No : 2

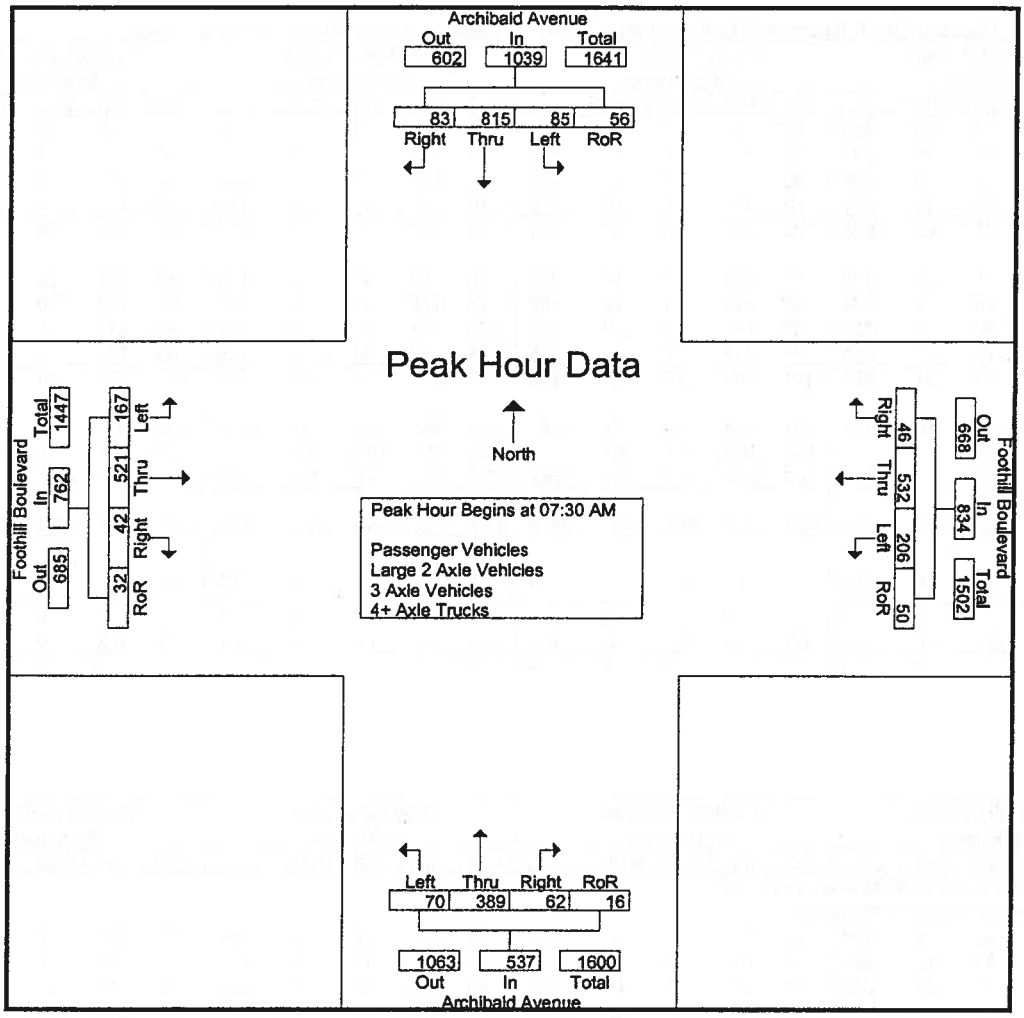

Peak Hour Analysis From 07:00 AM to 08:45 AM - Peak 1 of 1

Peak Hour for Each Approach Begins at:

	07:15 AM					07:30 AM					07:15 AM					07:30 AM				
+0 mins.	12	188	19	14	233	42	127	7	11	187	19	120	11	2	152	35	127	9	**10**	181
+15 mins.	16	233	**32**	**18**	**299**	**63**	**141**	6	10	220	12	**121**	**18**	**5**	**156**	35	132	9	5	181
+30 mins.	23	**237**	25	12	297	52	140	**18**	**17**	**227**	19	75	13	5	112	44	**138**	**14**	7	**203**
+45 mins.	**24**	199	8	18	249	49	124	15	12	200	**20**	88	12	2	122	**53**	124	10	10	197
Total Volume	75	857	84	62	1078	206	532	46	50	834	70	404	54	14	542	167	521	42	32	762
% App. Total	7	79.5	7.8	5.8		24.7	63.8	5.5	6		12.9	74.5	10	2.6		21.9	68.4	5.5	4.2	
PHF	.781	.904	.656	.861	.901	.817	.943	.639	.735	.919	.875	.835	.750	.700	.869	.788	.944	.750	.800	.938

Counts Unlimited Inc.
25286 Jaclyn Avenue
Moreno Valley, CA 92557
951-485-7934

City of Rancho Cucamonga
N/S: Archibald Avenue
E/W: Foothill Boulevard
Weather: Sunny

File Name : RNCARFOAM
Site Code : 9150066
Start Date : 5/28/2009
Page No : 1

Groups Printed- Passenger Vehicles

	Archibald Avenue Southbound					Foothill Boulevard Westbound					Archibald Avenue Northbound					Foothill Boulevard Eastbound					
Start Time	Left	Thru	Right	RoR	App. Total	Left	Thru	Right	RoR	App. Total	Left	Thru	Right	RoR	App. Total	Left	Thru	Right	RoR	App. Total	Int. Total
07:00 AM	18	144	4	19	185	25	87	6	7	125	5	72	9	4	90	15	59	10	6	90	490
07:15 AM	11	186	18	14	229	46	108	6	13	173	19	114	9	2	144	32	71	6	3	112	658
07:30 AM	16	227	31	17	291	42	125	7	11	185	9	113	16	5	143	33	124	9	10	176	795
07:45 AM	22	230	25	11	288	61	138	6	10	215	19	72	11	4	106	32	125	7	5	169	778
Total	67	787	78	61	993	174	458	25	41	698	52	371	45	15	483	112	379	32	24	547	2721
08:00 AM	24	197	8	18	247	50	135	18	17	220	19	85	9	2	115	43	134	14	7	198	780
08:15 AM	22	137	17	8	184	47	119	15	12	193	19	100	17	4	140	51	116	9	10	186	703
08:30 AM	21	176	19	8	224	44	98	10	4	156	19	79	15	7	120	41	112	10	10	173	673
08:45 AM	20	156	18	16	210	42	108	11	5	166	16	85	11	4	116	44	107	6	5	162	654
Total	87	666	62	50	865	183	460	54	38	735	73	349	52	17	491	179	469	39	32	719	2810
Grand Total	154	1453	140	111	1858	357	918	79	79	1433	125	720	97	32	974	291	848	71	56	1266	5531
Apprch %	8.3	78.2	7.5	6		24.9	64.1	5.5	5.5		12.8	73.9	10	3.3		23	67	5.6	4.4		
Total %	2.8	26.3	2.5	2	33.6	6.5	16.6	1.4	1.4	25.9	2.3	13	1.8	0.6	17.6	5.3	15.3	1.3	1	22.9	

	Archibald Avenue Southbound					Foothill Boulevard Westbound					Archibald Avenue Northbound					Foothill Boulevard Eastbound					
Start Time	Left	Thru	Right	RoR	App. Total		Thru	Right	RoR	App. Total		Thru	Right	RoR	App. Total		Thru	Right	RoR	App. Total	Int. Total
Peak Hour Analysis From 07:30 AM to 08:15 AM - Peak 1 of 1																					
Peak Hour for Entire Intersection Begins at 07:30 AM																					
07:30 AM	16	227	**31**	17	**291**	42	125	7	11	185	9	**113**	16	**5**	**143**	33	124	9	**10**	176	**795**
07:45 AM	22	**230**	25	11	288	**61**	**138**	6	10	215	**19**	72	11	4	106	32	125	7	5	169	778
08:00 AM	**24**	197	8	**18**	247	50	135	**18**	**17**	**220**	19	85	9	2	115	43	**134**	**14**	7	**198**	780
08:15 AM	22	137	17	8	184	47	119	15	12	193	19	100	17	4	140	**51**	116	9	10	186	703
Total Volume	84	791	81	54	1010	200	517	46	50	813	66	370	53	15	504	159	499	39	32	729	3056
% App. Total	8.3	78.3	8	5.3		24.6	63.6	5.7	6.2		13.1	73.4	10.5	3		21.8	68.4	5.3	4.4		
PHF	.875	.860	.653	.750	.868	.820	.937	.639	.735	.924	.868	.819	.779	.750	.881	.779	.931	.696	.800	.920	.961

Counts Unlimited Inc.
25286 Jaclyn Avenue
Moreno Valley, CA 92557
951-485-7934

City of Rancho Cucamonga
N/S: Archibald Avenue
E/W: Foothill Boulevard
Weather: Sunny

File Name : RNCARFOAM
Site Code : 9150066
Start Date : 5/28/2009
Page No : 2

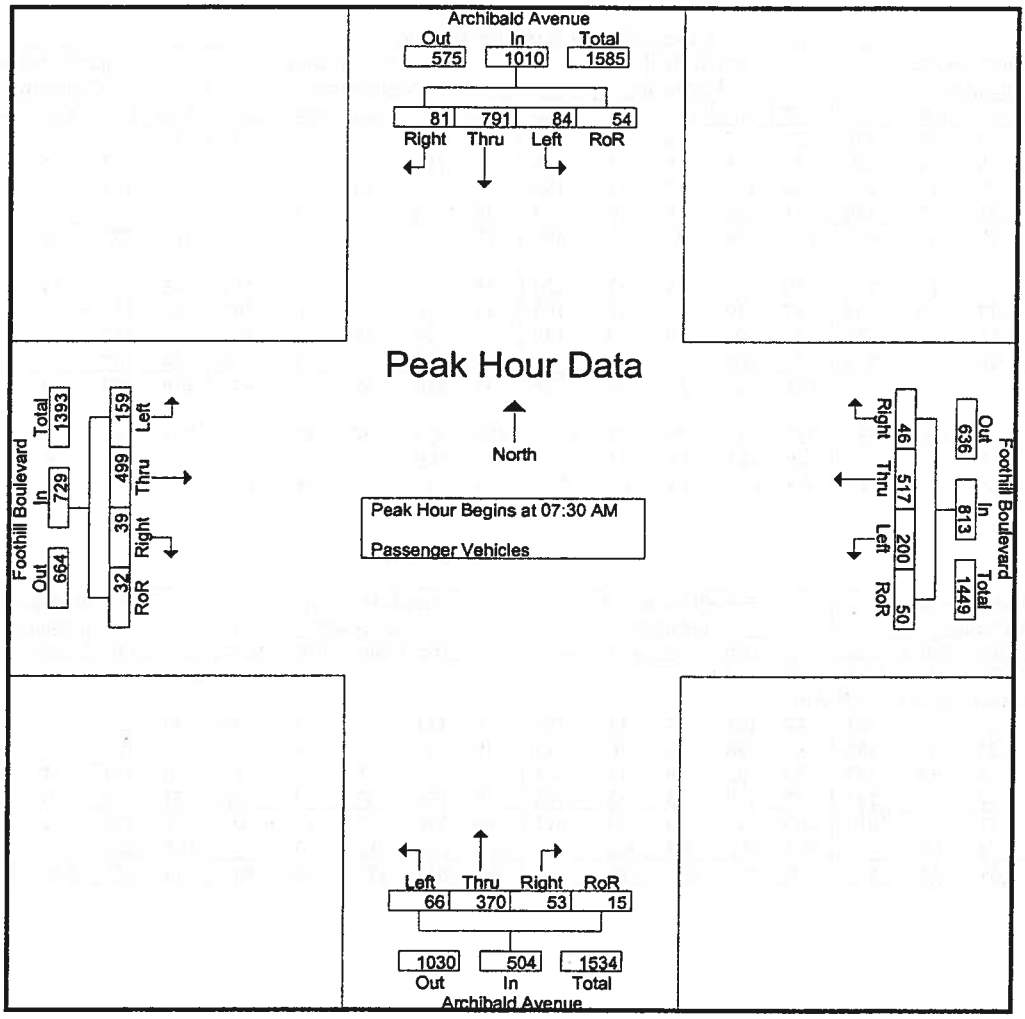

Peak Hour Analysis From 07:30 AM to 08:15 AM - Peak 1 of 1

Peak Hour for Each Approach Begins at:

	07:30 AM					07:30 AM					07:30 AM					07:30 AM				
+0 mins.	16	227	**31**	17	**291**	42	125	7	11	185	9	**113**	16	**5**	**143**	33	124	9	**10**	176
+15 mins.	22	**230**	25	11	288	**61**	**138**	6	10	215	**19**	72	11	4	106	32	125	7	5	169
+30 mins.	**24**	197	8	**18**	247	50	135	**18**	**17**	**220**	19	85	9	2	115	43	**134**	**14**	7	**198**
+45 mins.	22	137	17	8	184	47	119	15	12	193	19	100	**17**	4	140	**51**	116	9	10	186
Total Volume	84	791	81	54	1010	200	517	46	50	813	66	370	53	15	504	159	499	39	32	729
% App. Total	8.3	78.3	8	5.3		24.6	63.6	5.7	6.2		13.1	73.4	10.5	3		21.8	68.4	5.3	4.4	
PHF	.875	.860	.653	.750	.868	.820	.937	.639	.735	.924	.868	.819	.779	.750	.881	.779	.931	.696	.800	.920

Counts Unlimited Inc.
25286 Jaclyn Avenue
Moreno Valley, CA 92557
951-485-7934

City of Rancho Cucamonga
N/S: Archibald Avenue
E/W: Foothill Boulevard
Weather: Sunny

File Name : RNCARFOAM
Site Code : 9150066
Start Date : 5/28/2009
Page No : 1

Groups Printed- Large 2 Axle Vehicles

	Archibald Avenue Southbound					Foothill Boulevard Westbound					Archibald Avenue Northbound					Foothill Boulevard Eastbound					
Start Time	Left	Thru	Right	RoR	App. Total	Left	Thru	Right	RoR	App. Total	Left	Thru	Right	RoR	App. Total	Left	Thru	Right	RoR	App. Total	Int. Total
07:00 AM	0	3	0	0	3	2	0	1	0	3	1	2	0	0	3	1	5	0	0	6	15
07:15 AM	0	2	1	0	3	1	6	0	0	7	0	5	2	0	7	0	2	1	0	3	20
07:30 AM	0	5	1	0	6	0	2	0	0	2	2	3	1	0	6	2	2	0	0	4	18
07:45 AM	1	6	0	1	8	2	3	0	0	5	0	2	2	1	5	2	4	2	0	8	26
Total	1	16	2	1	20	5	11	1	0	17	3	12	5	1	21	5	13	3	0	21	79
08:00 AM	0	2	0	0	2	1	3	0	0	4	1	1	2	0	4	1	3	0	0	4	14
08:15 AM	0	4	1	0	5	2	2	0	0	4	0	4	2	0	6	1	4	1	0	6	21
08:30 AM	0	3	0	0	3	2	7	0	0	9	2	2	1	1	6	2	5	0	0	7	25
08:45 AM	0	0	0	1	1	1	8	1	0	10	0	3	0	0	3	1	4	0	0	5	19
Total	0	9	1	1	11	6	20	1	0	27	3	10	5	1	19	5	16	1	0	22	79
Grand Total	1	25	3	2	31	11	31	2	0	44	6	22	10	2	40	10	29	4	0	43	158
Apprch %	3.2	80.6	9.7	6.5		25	70.5	4.5	0		15	55	25	5		23.3	67.4	9.3	0		
Total %	0.6	15.8	1.9	1.3	19.6	7	19.6	1.3	0	27.8	3.8	13.9	6.3	1.3	25.3	6.3	18.4	2.5	0	27.2	

	Archibald Avenue Southbound					Foothill Boulevard Westbound					Archibald Avenue Northbound					Foothill Boulevard Eastbound					
Start Time	Left	Thru	Right	RoR	App. Total		Thru	Right	RoR	App. Total		Thru	Right	RoR	App. Total		Thru	Right	RoR	App. Total	Int. Total
Peak Hour Analysis From 07:30 AM to 08:15 AM - Peak 1 of 1																					
Peak Hour for Entire Intersection Begins at 07:30 AM																					
07:30 AM	0	5	1	0	6	0	2	0	0	2	2	3	1	0	6	2	2	0	0	4	18
07:45 AM	1	6	0	1	8	2	3	0	0	5	0	2	2	1	5	2	4	2	0	8	26
08:00 AM	0	2	0	0	2	1	3	0	0	4	1	1	2	0	4	1	3	0	0	4	14
08:15 AM	0	4	1	0	5	2	2	0	0	4	0	4	2	0	6	1	4	1	0	6	21
Total Volume	1	17	2	1	21	5	10	0	0	15	3	10	7	1	21	6	13	3	0	22	79
% App. Total	4.8	81	9.5	4.8		33.3	66.7	0	0		14.3	47.6	33.3	4.8		27.3	59.1	13.6	0		
PHF	.250	.708	.500	.250	.656	.625	.833	.000	.000	.750	.375	.625	.875	.250	.875	.750	.813	.375	.000	.688	.760

Counts Unlimited Inc.
25286 Jaclyn Avenue
Moreno Valley, CA 92557
951-485-7934

City of Rancho Cucamonga
N/S: Archibald Avenue
E/W: Foothill Boulevard
Weather: Sunny

File Name : RNCARFOAM
Site Code : 9150066
Start Date : 5/28/2009
Page No : 2

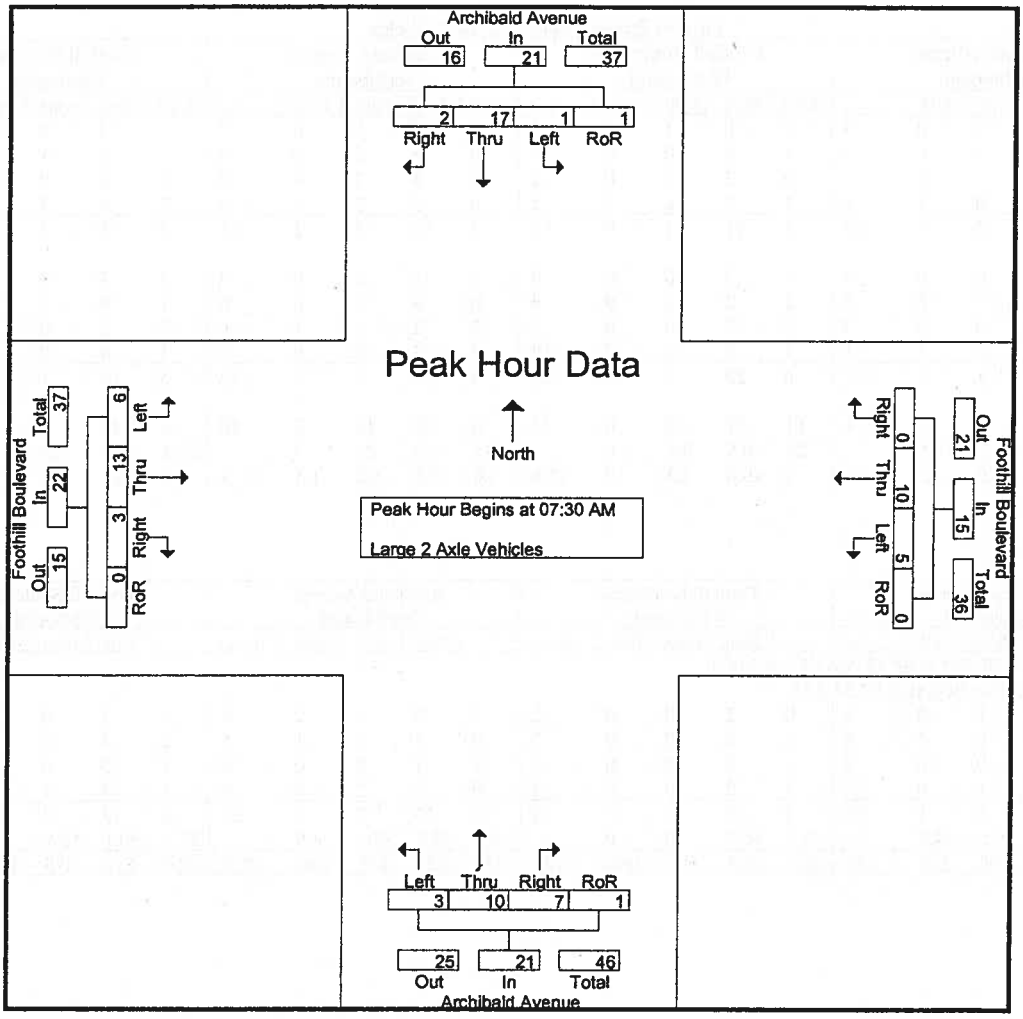

Peak Hour Analysis From 07:30 AM to 08:15 AM - Peak 1 of 1

Peak Hour for Each Approach Begins at:

	07:30 AM					07:30 AM					07:30 AM					07:30 AM				
+0 mins.	0	5	1	0	6	0	2	0	0	2	2	3	1	0	6	2	2	0	0	4
+15 mins.	1	6	0	1	8	2	3	0	0	5	0	2	2	1	5	2	4	2	0	8
+30 mins.	0	2	0	0	2	1	3	0	0	4	1	1	2	0	4	1	3	0	0	4
+45 mins.	0	4	1	0	5	2	2	0	0	4	0	4	2	0	6	1	4	1	0	6
Total Volume	1	17	2	1	21	5	10	0	0	15	3	10	7	1	21	6	13	3	0	22
% App. Total	4.8	81	9.5	4.8		33.3	66.7	0	0		14.3	47.6	33.3	4.8		27.3	59.1	13.6	0	
PHF	.250	.708	.500	.250	.656	.625	.833	.000	.000	.750	.375	.625	.875	.250	.875	.750	.813	.375	.000	.688

Counts Unlimited Inc.
25286 Jaclyn Avenue
Moreno Valley, CA 92557
951-485-7934

City of Rancho Cucamonga
N/S: Archibald Avenue
E/W: Foothill Boulevard
Weather: Sunny

File Name : RNCARFOAM
Site Code : 9150066
Start Date : 5/28/2009
Page No : 1

Groups Printed- 3 Axle Vehicles

	Archibald Avenue Southbound					Foothill Boulevard Westbound					Archibald Avenue Northbound					Foothill Boulevard Eastbound					
Start Time	Left	Thru	Right	RoR	App. Total	Left	Thru	Right	RoR	App. Total	Left	Thru	Right	RoR	App. Total	Left	Thru	Right	RoR	App. Total	Int. Total
07:00 AM	0	0	0	0	0	0	0	0	0	0	0	2	0	0	2	0	1	0	0	1	3
07:15 AM	0	0	0	0	0	1	0	0	0	1	0	0	0	0	0	0	1	0	0	1	2
07:30 AM	0	1	0	1	2	0	0	0	0	0	1	2	1	0	4	0	1	0	0	1	7
07:45 AM	0	0	0	0	0	0	0	0	0	0	0	0	0	0	0	1	1	0	0	2	2
Total	0	1	0	1	2	1	0	0	0	1	1	4	1	0	6	1	4	0	0	5	14
08:00 AM	0	0	0	0	0	0	0	0	0	0	0	2	0	0	2	0	1	0	0	1	3
08:15 AM	0	1	0	0	1	0	2	0	0	2	0	1	0	0	1	0	2	0	0	2	6
08:30 AM	0	0	1	0	1	0	0	1	0	1	0	0	1	0	1	0	0	0	0	0	3
08:45 AM	0	3	0	0	3	0	0	0	0	0	0	1	0	0	1	0	0	0	0	0	4
Total	0	4	1	0	5	0	2	1	0	3	0	4	1	0	5	0	3	0	0	3	16
Grand Total	0	5	1	1	7	1	2	1	0	4	1	8	2	0	11	1	7	0	0	8	30
Apprch %	0	71.4	14.3	14.3		25	50	25	0		9.1	72.7	18.2	0		12.5	87.5	0	0		
Total %	0	16.7	3.3	3.3	23.3	3.3	6.7	3.3	0	13.3	3.3	26.7	6.7	0	36.7	3.3	23.3	0	0	26.7	

	Archibald Avenue Southbound					Foothill Boulevard Westbound					Archibald Avenue Northbound					Foothill Boulevard Eastbound					
Start Time	Left	Thru	Right	RoR	App. Total		Thru	Right	RoR	App. Total		Thru	Right	RoR	App. Total		Thru	Right	RoR	App. Total	Int. Total
Peak Hour Analysis From 07:30 AM to 08:15 AM - Peak 1 of 1																					
Peak Hour for Entire Intersection Begins at 07:30 AM																					
07:30 AM	0	1	0	1	2	0	0	0	0	0	1	2	1	0	4	0	1	0	0	1	7
07:45 AM	0	0	0	0	0	0	0	0	0	0	0	0	0	0	0	1	1	0	0	2	2
08:00 AM	0	0	0	0	0	0	0	0	0	0	0	2	0	0	2	0	1	0	0	1	3
08:15 AM	0	1	0	0	1	0	2	0	0	2	0	1	0	0	1	0	2	0	0	2	6
Total Volume	0	2	0	1	3	0	2	0	0	2	1	5	1	0	7	1	5	0	0	6	18
% App. Total	0	66.7	0	33.3		0	100	0	0		14.3	71.4	14.3	0		16.7	83.3	0	0		
PHF	.000	.500	.000	.250	.375	.000	.250	.000	.000	.250	.250	.625	.250	.000	.438	.250	.625	.000	.000	.750	.643

Counts Unlimited Inc.
25286 Jaclyn Avenue
Moreno Valley, CA 92557
951-485-7934

City of Rancho Cucamonga
N/S: Archibald Avenue
E/W: Foothill Boulevard
Weather: Sunny

File Name : RNCARFOAM
Site Code : 9150066
Start Date : 5/28/2009
Page No : 2

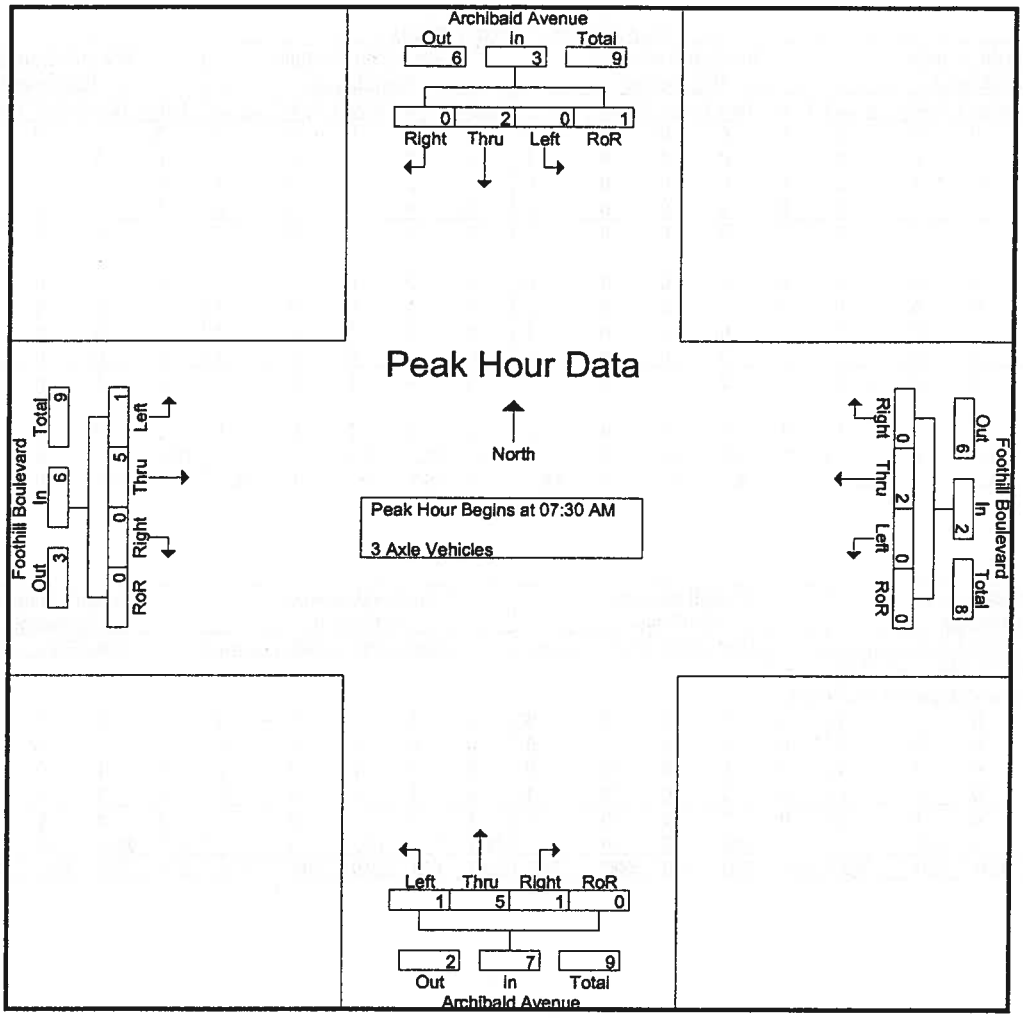

Peak Hour Analysis From 07:30 AM to 08:15 AM - Peak 1 of 1

Peak Hour for Each Approach Begins at:

	07:30 AM					07:30 AM					07:30 AM					07:30 AM				
+0 mins.	0	1	0	1	2	0	0	0	0	0	1	2	1	0	4	0	1	0	0	1
+15 mins.	0	0	0	0	0	0	0	0	0	0	0	0	0	0	0	1	1	0	0	2
+30 mins.	0	0	0	0	0	0	0	0	0	0	0	2	0	0	2	0	1	0	0	1
+45 mins.	0	1	0	0	1	0	2	0	0	2	0	1	0	0	1	0	2	0	0	2
Total Volume	0	2	0	1	3	0	2	0	0	2	1	5	1	0	7	1	5	0	0	6
% App. Total	0	66.7	0	33.3		0	100	0	0		14.3	71.4	14.3	0		16.7	83.3	0	0	
PHF	.000	.500	.000	.250	.375	.000	.250	.000	.000	.250	.250	.625	.250	.000	.438	.250	.625	.000	.000	.750

Counts Unlimited Inc.
25286 Jaclyn Avenue
Moreno Valley, CA 92557
951-485-7934

City of Rancho Cucamonga
N/S: Archibald Avenue
E/W: Foothill Boulevard
Weather: Sunny

File Name : RNCARFOAM
Site Code : 9150066
Start Date : 5/28/2009
Page No : 1

Groups Printed- 4+ Axle Trucks

	Archibald Avenue Southbound					Foothill Boulevard Westbound					Archibald Avenue Northbound					Foothill Boulevard Eastbound					
Start Time	Left	Thru	Right	RoR	App. Total	Left	Thru	Right	RoR	App. Total	Left	Thru	Right	RoR	App. Total	Left	Thru	Right	RoR	App. Total	Int. Total
07:00 AM	0	0	1	0	1	0	0	0	0	0	0	0	0	0	0	1	0	0	0	1	2
07:15 AM	1	0	0	0	1	0	1	0	0	1	0	1	0	0	1	0	0	1	0	1	4
07:30 AM	0	0	0	0	0	0	0	0	0	0	0	3	0	0	3	0	0	0	0	0	3
07:45 AM	0	1	0	0	1	0	0	0	0	0	0	1	0	0	1	0	2	0	0	2	4
Total	1	1	1	0	3	0	1	0	0	1	0	5	0	0	5	1	2	1	0	4	13
08:00 AM	0	0	0	0	0	1	2	0	0	3	0	0	1	0	1	0	0	0	0	0	4
08:15 AM	0	4	0	0	4	0	1	0	0	1	0	0	0	0	0	1	2	0	0	3	8
08:30 AM	0	0	0	0	0	1	0	0	0	1	0	0	0	0	0	0	0	0	0	0	1
08:45 AM	0	1	0	0	1	0	0	0	0	0	0	0	0	0	0	0	0	0	0	0	1
Total	0	5	0	0	5	2	3	0	0	5	0	0	1	0	1	1	2	0	0	3	14
Grand Total	1	6	1	0	8	2	4	0	0	6	0	5	1	0	6	2	4	1	0	7	27
Apprch %	12.5	75	12.5	0		33.3	66.7	0	0		0	83.3	16.7	0		28.6	57.1	14.3	0		
Total %	3.7	22.2	3.7	0	29.6	7.4	14.8	0	0	22.2	0	18.5	3.7	0	22.2	7.4	14.8	3.7	0	25.9	

	Archibald Avenue Southbound					Foothill Boulevard Westbound					Archibald Avenue Northbound					Foothill Boulevard Eastbound					
Start Time	Left	Thru	Right	RoR	App. Total		Thru	Right	RoR	App. Total		Thru	Right	RoR	App. Total		Thru	Right	RoR	App. Total	Int. Total
Peak Hour Analysis From 07:30 AM to 08:15 AM - Peak 1 of 1																					
Peak Hour for Entire Intersection Begins at 07:30 AM																					
07:30 AM	0	0	0	0	0	0	0	0	0	0	0	3	0	0	3	0	0	0	0	0	3
07:45 AM	0	1	0	0	1	0	0	0	0	0	0	1	0	0	1	0	2	0	0	2	4
08:00 AM	0	0	0	0	0	1	2	0	0	3	0	0	1	0	1	0	0	0	0	0	4
08:15 AM	0	4	0	0	4	0	1	0	0	1	0	0	0	0	0	1	2	0	0	3	8
Total Volume	0	5	0	0	5	1	3	0	0	4	0	4	1	0	5	1	4	0	0	5	19
% App. Total	0	100	0	0		25	75	0	0		0	80	20	0		20	80	0	0		
PHF	.000	.313	.000	.000	.313	.250	.375	.000	.000	.333	.000	.333	.250	.000	.417	.250	.500	.000	.000	.417	.594

Counts Unlimited Inc.
25286 Jaclyn Avenue
Moreno Valley, CA 92557
951-485-7934

City of Rancho Cucamonga
N/S: Archibald Avenue
E/W: Foothill Boulevard
Weather: Sunny

File Name : RNCARFOAM
Site Code : 9150066
Start Date : 5/28/2009
Page No : 2

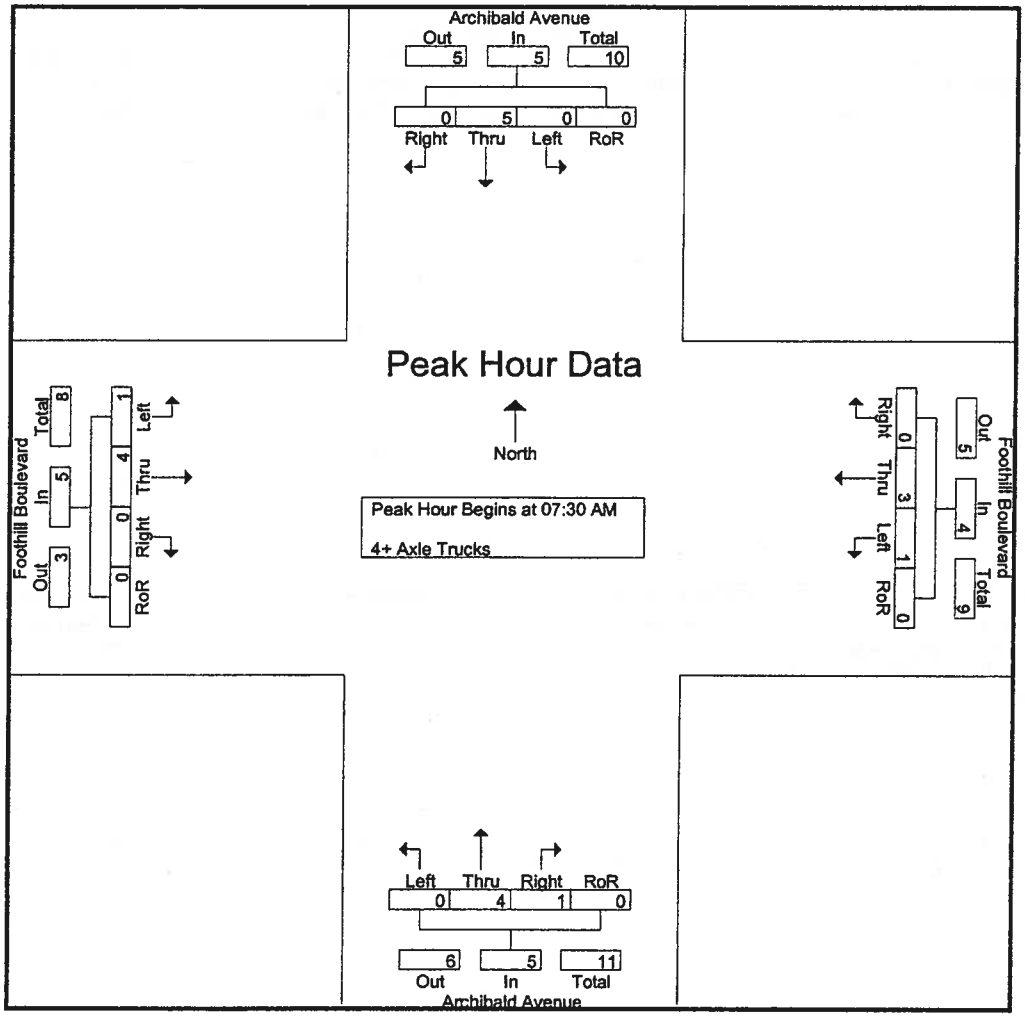

Peak Hour Analysis From 07:30 AM to 08:15 AM - Peak 1 of 1

Peak Hour for Each Approach Begins at:

	07:30 AM					07:30 AM					07:30 AM					07:30 AM				
+0 mins.	0	0	0	0	0	0	0	0	0	0	0	3	0	0	3	0	0	0	0	0
+15 mins.	0	1	0	0	1	0	0	0	0	0	0	1	0	0	1	0	2	0	0	2
+30 mins.	0	0	0	0	0	1	2	0	0	3	0	0	1	0	1	0	0	0	0	0
+45 mins.	0	4	0	0	4	0	1	0	0	1	0	0	0	0	0	1	2	0	0	3
Total Volume	0	5	0	0	5	1	3	0	0	4	0	4	1	0	5	1	4	0	0	5
% App. Total	0	100	0	0		25	75	0	0		0	80	20	0		20	80	0	0	
PHF	.000	.313	.000	.000	.313	.250	.375	.000	.000	.333	.000	.333	.250	.000	.417	.250	.500	.000	.000	.417

Counts Unlimited Inc.
25286 Jaclyn Avenue
Moreno Valley, CA 92557
951-485-7934

City of Rancho Cucamonga
N/S: Archibald Avenue
E/W: Foothill Boulevard
Weather: Sunny

File Name : RNCARFOPM
Site Code : 9150066
Start Date : 5/28/2009
Page No : 1

Groups Printed- Passenger Vehicles - Large 2 Axle Vehicles - 3 Axle Vehicles - 4+ Axle Trucks

	Archibald Avenue Southbound					Foothill Boulevard Westbound					Archibald Avenue Northbound					Foothill Boulevard Eastbound					
Start Time	Left	Thru	Right	RoR	App. Total	Left	Thru	Right	RoR	App. Total	Left	Thru	Right	RoR	App. Total	Left	Thru	Right	RoR	App. Total	Int. Total
04:00 PM	36	121	22	18	197	58	183	23	3	267	17	194	42	10	263	67	234	21	17	339	1066
04:15 PM	35	128	15	15	193	43	145	15	16	219	19	171	26	8	224	70	229	21	10	330	966
04:30 PM	27	118	13	27	185	46	197	28	14	285	21	180	37	7	245	75	248	16	10	349	1064
04:45 PM	34	145	19	12	210	68	184	20	10	282	17	208	27	3	255	70	212	17	6	305	1052
Total	132	512	69	72	785	215	709	86	43	1053	74	753	132	28	987	282	923	75	43	1323	4148
05:00 PM	36	123	26	19	204	63	174	29	10	276	26	207	30	4	267	65	211	13	4	293	1040
05:15 PM	31	137	19	20	207	49	182	27	12	270	23	210	38	0	271	85	217	12	4	318	1066
05:30 PM	27	140	16	16	199	44	152	27	7	230	27	208	27	9	271	86	242	14	3	345	1045
05:45 PM	28	140	17	14	199	42	159	32	5	238	17	182	30	3	232	78	222	12	8	320	989
Total	122	540	78	69	809	198	667	115	34	1014	93	807	125	16	1041	314	892	51	19	1276	4140
Grand Total	254	1052	147	141	1594	413	1376	201	77	2067	167	1560	257	44	2028	596	1815	126	62	2599	8288
Apprch %	15.9	66	9.2	8.8		20	66.6	9.7	3.7		8.2	76.9	12.7	2.2		22.9	69.8	4.8	2.4		
Total %	3.1	12.7	1.8	1.7	19.2	5	16.6	2.4	0.9	24.9	2	18.8	3.1	0.5	24.5	7.2	21.9	1.5	0.7	31.4	
Passenger Vehicles		1022					1352					1532					1788				
% Passenger Vehicles	98.4	97.1	98.6	98.6	97.6	97.8	98.3	98.5	97.4	98.2	97	98.2	98.8	100	98.2	98.5	98.5	96.8	98.4	98.4	98.2
Large 2 Axle Vehicles																					
% Large 2 Axle Vehicles	1.6	1.4	0.7	1.4	1.4	1.7	1.5	0.5	2.6	1.5	3	1.4	1.2	0	1.5	1	1.3	2.4	1.6	1.3	1.4
3 Axle Vehicles	0	12	0	0	12	1	0	2	0	3	0	2	0	0	2	1	3	1	0	5	22
% 3 Axle Vehicles	0	1.1	0	0	0.8	0.2	0	1	0	0.1	0	0.1	0	0	0.1	0.2	0.2	0.8	0	0.2	0.3
4+ Axle Trucks	0	3	1	0	4	1	3	0	0	4	0	4	0	0	4	2	1	0	0	3	15
% 4+ Axle Trucks																					

	Archibald Avenue Southbound					Foothill Boulevard Westbound					Archibald Avenue Northbound					Foothill Boulevard Eastbound					
Start Time	Left	Thru	Right	RoR	App. Total	Left	Thru	Right	RoR	App. Total	Left	Thru	Right	RoR	App. Total	Left	Thru	Right	RoR	App. Total	Int. Total
Peak Hour Analysis From 04:00 PM to 05:45 PM - Peak 1 of 1																					
Peak Hour for Entire Intersection Begins at 04:30 PM																					
04:30 PM	27	118	13	27	185	46	197	28	14	285	21	180	37	7	245	75	248	16	10	349	1064
04:45 PM	34	145	19	12	210	68	184	20	10	282	17	208	27	3	255	70	212	17	6	305	1052
05:00 PM	36	123	26	19	204	63	174	29	10	276	26	207	30	4	267	65	211	13	4	293	1040
05:15 PM	31	137	19	20	207	49	182	27	12	270	23	210	38	0	271	85	217	12	4	318	1066
Total Volume	128	523	77	78	806	226	737	104	46	1113	87	805	132	14	1038	295	888	58	24	1265	4222
% App. Total	15.9	64.9	9.6	9.7		20.3	66.2	9.3	4.1		8.4	77.6	12.7	1.3		23.3	70.2	4.6	1.9		
PHF	.889	.902	.740	.722	.960	.831	.935	.897	.821	.976	.837	.958	.868	.500	.958	.868	.895	.853	.600	.906	.990

Counts Unlimited Inc.
25286 Jaclyn Avenue
Moreno Valley, CA 92557
951-485-7934

City of Rancho Cucamonga
N/S: Archibald Avenue
E/W: Foothill Boulevard
Weather: Sunny

File Name : RNCARFOPM
Site Code : 9150066
Start Date : 5/28/2009
Page No : 2

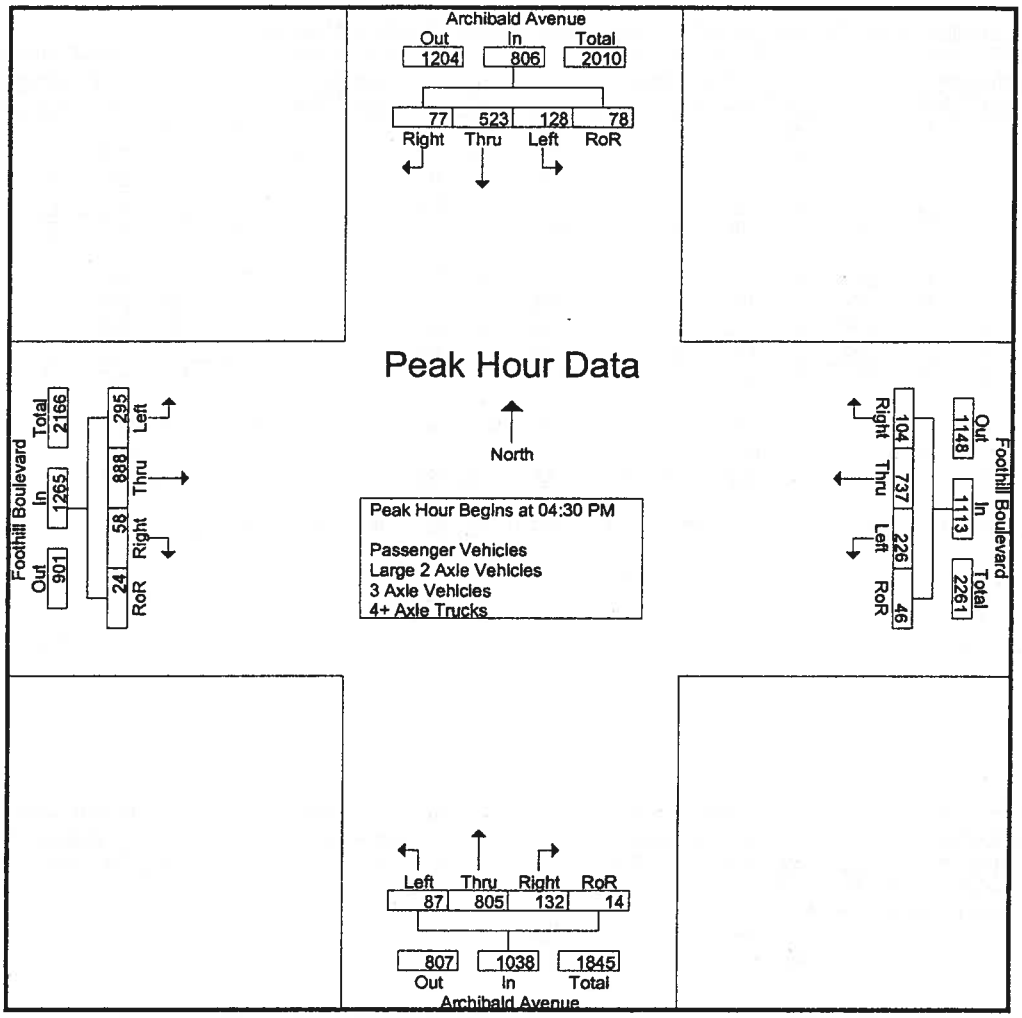

Peak Hour Analysis From 04:00 PM to 05:45 PM - Peak 1 of 1

Peak Hour for Each Approach Begins at:

	04:45 PM					04:30 PM					04:45 PM					04:00 PM				
+0 mins.	34	**145**	19	12	**210**	46	**197**	28	**14**	**285**	17	208	27	3	255	67	234	**21**	**17**	339
+15 mins.	**36**	123	**26**	19	204	**68**	184	20	10	282	26	207	30	4	267	70	229	21	10	330
+30 mins.	31	137	19	**20**	207	63	174	**29**	10	276	23	**210**	**38**	0	**271**	**75**	**248**	16	10	**349**
+45 mins.	27	140	16	16	199	49	182	27	12	270	**27**	208	27	**9**	271	70	212	17	6	305
Total Volume	128	545	80	67	820	226	737	104	46	1113	93	833	122	16	1064	282	923	75	43	1323
% App. Total	15.6	66.5	9.8	8.2		20.3	66.2	9.3	4.1		8.7	78.3	11.5	1.5		21.3	69.8	5.7	3.3	
PHF	.889	.940	.769	.838	.976	.831	.935	.897	.821	.976	.861	.992	.803	.444	.982	.940	.930	.893	.632	.948

Counts Unlimited Inc.
25286 Jaclyn Avenue
Moreno Valley, CA 92557
951-485-7934

City of Rancho Cucamonga
N/S: Archibald Avenue
E/W: Foothill Boulevard
Weather: Sunny

File Name : RNCARFOPM
Site Code : 9150066
Start Date : 5/28/2009
Page No : 1

Groups Printed- Passenger Vehicles

	Archibald Avenue Southbound					Foothill Boulevard Westbound					Archibald Avenue Northbound					Foothill Boulevard Eastbound					
Start Time	Left	Thru	Right	RoR	App. Total	Left	Thru	Right	RoR	App. Total	Left	Thru	Right	RoR	App. Total	Left	Thru	Right	RoR	App. Total	Int. Total
04:00 PM	36	117	22	18	193	58	179	22	3	262	16	186	41	10	253	65	229	21	17	332	1040
04:15 PM	33	124	15	15	187	43	143	15	16	217	19	168	25	8	220	68	226	20	10	324	948
04:30 PM	26	117	13	27	183	42	194	28	13	277	21	177	37	7	242	74	247	16	10	347	1049
04:45 PM	33	142	19	12	206	66	179	19	10	274	16	205	26	3	250	69	207	16	6	298	1028
Total	128	500	69	72	769	209	695	84	42	1030	72	736	129	28	965	276	909	73	43	1301	4065
05:00 PM	36	120	24	18	198	63	173	29	10	275	24	204	30	4	262	64	208	13	4	289	1024
05:15 PM	31	135	19	20	205	48	179	27	11	265	23	206	38	0	267	85	215	11	4	315	1052
05:30 PM	27	136	16	16	195	44	150	26	7	227	26	206	27	9	268	85	239	13	3	340	1030
05:45 PM	28	131	17	13	189	40	155	32	5	232	17	180	30	3	230	77	217	12	7	313	964
Total	122	522	76	67	787	195	657	114	33	999	90	796	125	16	1027	311	879	49	18	1257	4070
Grand Total	250	1022	145	139	1556	404	1352	198	75	2029	162	1532	254	44	1992	587	1788	122	61	2558	8135
Apprch %	16.1	65.7	9.3	8.9		19.9	66.6	9.8	3.7		8.1	76.9	12.8	2.2		22.9	69.9	4.8	2.4		
Total %	3.1	12.6	1.8	1.7	19.1	5	16.6	2.4	0.9	24.9	2	18.8	3.1	0.5	24.5	7.2	22	1.5	0.7	31.4	

	Archibald Avenue Southbound					Foothill Boulevard Westbound					Archibald Avenue Northbound					Foothill Boulevard Eastbound					
Start Time	Left	Thru	Right	RoR	App. Total		Thru	Right	RoR	App. Total		Thru	Right	RoR	App. Total		Thru	Right	RoR	App. Total	Int. Total
Peak Hour Analysis From 04:30 PM to 05:15 PM - Peak 1 of 1																					
Peak Hour for Entire Intersection Begins at 04:30 PM																					
04:30 PM	26	117	13	**27**	183	42	**194**	28	**13**	**277**	21	177	37	**7**	242	74	**247**	**16**	**10**	347	1049
04:45 PM	33	**142**	19	12	**206**	**66**	179	19	10	274	16	205	26	3	250	69	207	16	6	298	1028
05:00 PM	**36**	120	**24**	18	198	63	173	**29**	10	275	**24**	204	30	4	262	64	208	13	4	289	1024
05:15 PM	31	135	19	20	205	48	179	27	11	265	23	**206**	**38**	0	**267**	**85**	215	11	4	315	**1052**
Total Volume	126	514	75	77	792	219	725	103	44	1091	84	792	131	14	1021	292	877	56	24	1249	4153
% App. Total	15.9	64.9	9.5	9.7		20.1	66.5	9.4	4		8.2	77.6	12.8	1.4		23.4	70.2	4.5	1.9		
PHF	.875	.905	.781	.713	.961	.830	.934	.888	.846	.985	.875	.961	.862	.500	.956	.859	.888	.875	.600	.900	.987

Counts Unlimited Inc.
25286 Jaclyn Avenue
Moreno Valley, CA 92557
951-485-7934

City of Rancho Cucamonga
N/S: Archibald Avenue
E/W: Foothill Boulevard
Weather: Sunny

File Name : RNCARFOPM
Site Code : 9150066
Start Date : 5/28/2009
Page No : 2

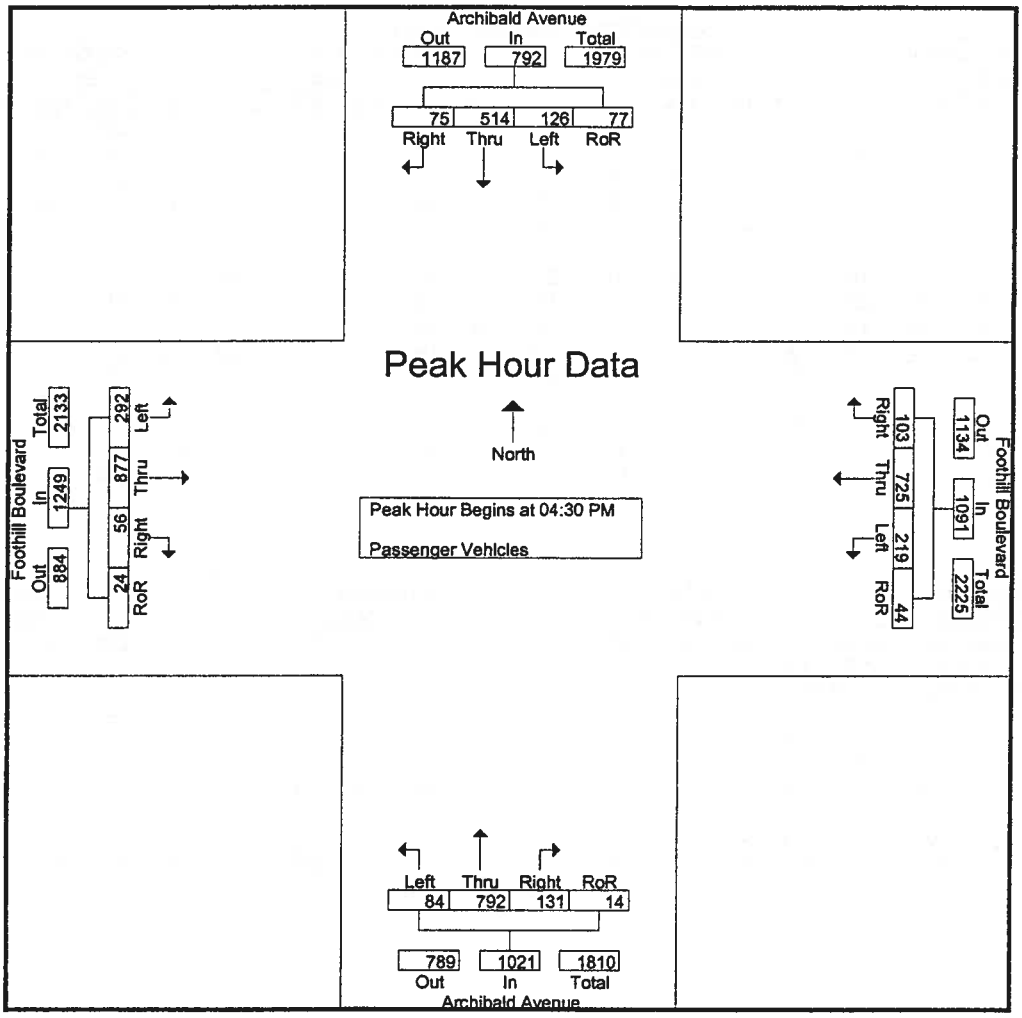

Peak Hour Analysis From 04:30 PM to 05:15 PM - Peak 1 of 1

Peak Hour for Each Approach Begins at:

	04:30 PM					04:30 PM					04:30 PM					04:30 PM				
+0 mins.	26	117	13	**27**	183	42	**194**	28	**13**	277	21	177	37	7	242	74	**247**	**16**	**10**	347
+15 mins.	33	**142**	19	12	**206**	**66**	179	19	10	274	16	205	26	3	250	69	207	16	6	298
+30 mins.	**36**	120	**24**	18	198	63	173	**29**	10	275	**24**	204	30	4	262	64	208	13	4	289
+45 mins.	31	135	19	20	205	48	179	27	11	265	23	**206**	**38**	0	**267**	**85**	215	11	4	315
Total Volume	126	514	75	77	792	219	725	103	44	1091	84	792	131	14	1021	292	877	56	24	1249
% App. Total	15.9	64.9	9.5	9.7		20.1	66.5	9.4	4		8.2	77.6	12.8	1.4		23.4	70.2	4.5	1.9	
PHF	.875	.905	.781	.713	.961	.830	.934	.888	.846	.985	.875	.961	.862	.500	.956	.859	.888	.875	.600	.900

Counts Unlimited Inc.
25286 Jaclyn Avenue
Moreno Valley, CA 92557
951-485-7934

City of Rancho Cucamonga
N/S: Archibald Avenue
E/W: Foothill Boulevard
Weather: Sunny

File Name : RNCARFOPM
Site Code : 9150066
Start Date : 5/28/2009
Page No : 1

Groups Printed- Large 2 Axle Vehicles

	Archibald Avenue Southbound					Foothill Boulevard Westbound					Archibald Avenue Northbound					Foothill Boulevard Eastbound					
Start Time	Left	Thru	Right	RoR	App. Total	Left	Thru	Right	RoR	App. Total	Left	Thru	Right	RoR	App. Total	Left	Thru	Right	RoR	App. Total	Int. Total
04:00 PM	0	1	0	0	1	0	3	1	0	4	1	8	1	0	10	0	3	0	0	3	18
04:15 PM	2	0	0	0	2	0	2	0	0	2	0	2	1	0	3	2	3	0	0	5	12
04:30 PM	1	1	0	0	2	3	3	0	1	7	0	3	0	0	3	1	1	0	0	2	14
04:45 PM	1	3	0	0	4	2	5	0	0	7	1	3	1	0	5	1	4	1	0	6	22
Total	4	5	0	0	9	5	13	1	1	20	2	16	3	0	21	4	11	1	0	16	66
05:00 PM	0	3	1	1	5	0	1	0	0	1	2	1	0	0	3	1	3	0	0	4	13
05:15 PM	0	2	0	0	2	0	1	0	1	2	0	3	0	0	3	0	2	1	0	3	10
05:30 PM	0	1	0	0	1	0	2	0	0	2	1	1	0	0	2	0	3	1	0	4	9
05:45 PM	0	4	0	1	5	2	4	0	0	6	0	1	0	0	1	1	4	0	1	6	18
Total	0	10	1	2	13	2	8	0	1	11	3	6	0	0	9	2	12	2	1	17	50
Grand Total	4	15	1	2	22	7	21	1	2	31	5	22	3	0	30	6	23	3	1	33	116
Apprch %	18.2	68.2	4.5	9.1		22.6	67.7	3.2	6.5		16.7	73.3	10	0		18.2	69.7	9.1	3		
Total %	3.4	12.9	0.9	1.7	19	6	18.1	0.9	1.7	26.7	4.3	19	2.6	0	25.9	5.2	19.8	2.6	0.9	28.4	

	Archibald Avenue Southbound					Foothill Boulevard Westbound					Archibald Avenue Northbound					Foothill Boulevard Eastbound					
Start Time	Left	Thru	Right	RoR	App. Total		Thru	Right	RoR	App. Total		Thru	Right	RoR	App. Total		Thru	Right	RoR	App. Total	Int. Total
Peak Hour Analysis From 04:30 PM to 05:15 PM - Peak 1 of 1																					
Peak Hour for Entire Intersection Begins at 04:30 PM																					
04:30 PM	1	1	0	0	2	3	3	0	1	7	0	3	0	0	3	1	1	0	0	2	14
04:45 PM	1	3	0	0	4	2	5	0	0	7	1	3	1	0	5	1	4	1	0	6	22
05:00 PM	0	3	1	1	5	0	1	0	0	1	2	1	0	0	3	1	3	0	0	4	13
05:15 PM	0	2	0	0	2	0	1	0	1	2	0	3	0	0	3	0	2	1	0	3	10
Total Volume	2	9	1	1	13	5	10	0	2	17	3	10	1	0	14	3	10	2	0	15	59
% App. Total	15.4	69.2	7.7	7.7		29.4	58.8	0	11.8		21.4	71.4	7.1	0		20	66.7	13.3	0		
PHF	.500	.750	.250	.250	.650	.417	.500	.000	.500	.607	.375	.833	.250	.000	.700	.750	.625	.500	.000	.625	.670

Counts Unlimited Inc.
25286 Jaclyn Avenue
Moreno Valley, CA 92557
951-485-7934

City of Rancho Cucamonga
N/S: Archibald Avenue
E/W: Foothill Boulevard
Weather: Sunny

File Name : RNCARFOPM
Site Code : 9150066
Start Date : 5/28/2009
Page No : 2

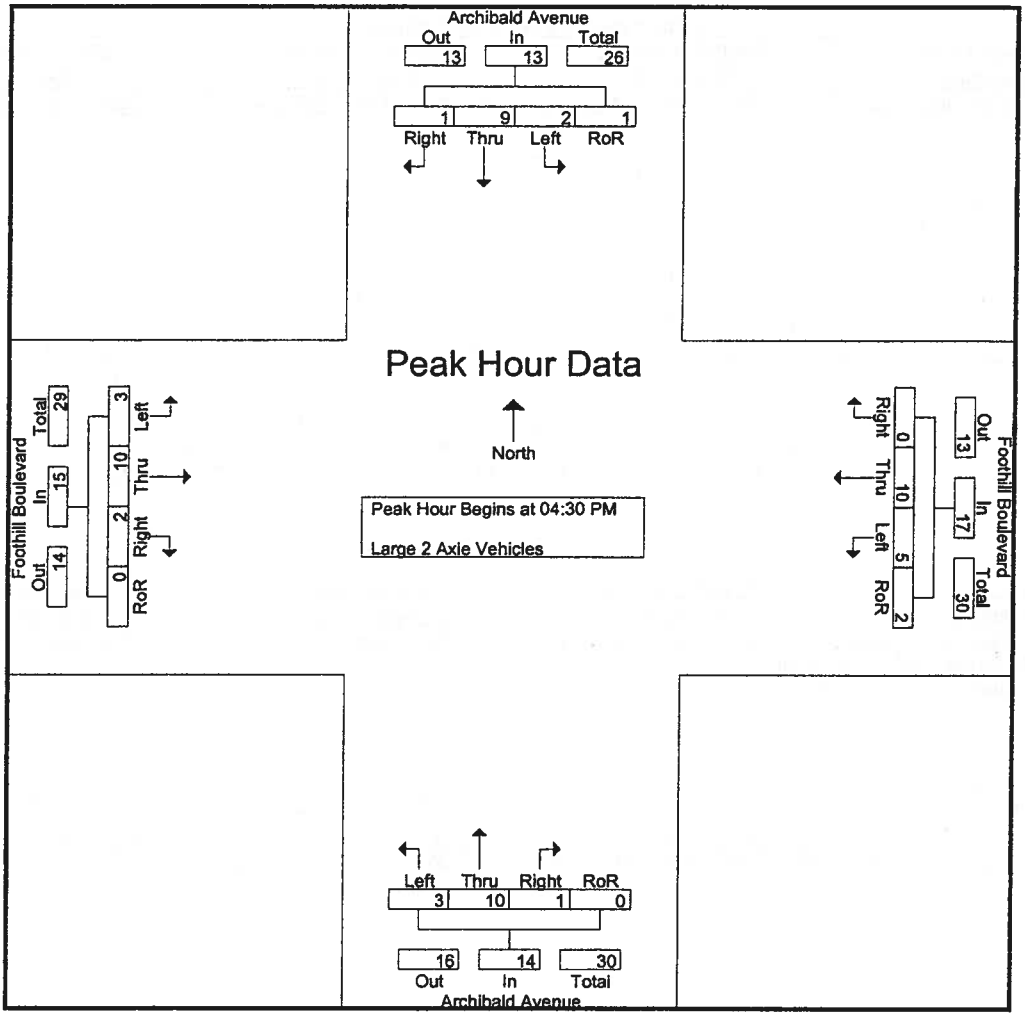

Peak Hour Analysis From 04:30 PM to 05:15 PM - Peak 1 of 1

Peak Hour for Each Approach Begins at:

	04:30 PM					04:30 PM					04:30 PM					04:30 PM				
+0 mins.	1	1	0	0	2	3	3	0	1	7	0	3	0	0	3	1	1	0	0	2
+15 mins.	1	3	0	0	4	2	5	0	0	7	1	3	1	0	5	1	4	1	0	6
+30 mins.	0	3	1	1	5	0	1	0	0	1	2	1	0	0	3	1	3	0	0	4
+45 mins.	0	2	0	0	2	0	1	0	1	2	0	3	0	0	3	0	2	1	0	3
Total Volume	2	9	1	1	13	5	10	0	2	17	3	10	1	0	14	3	10	2	0	15
% App. Total	15.4	69.2	7.7	7.7		29.4	58.8	0	11.8		21.4	71.4	7.1	0		20	66.7	13.3	0	
PHF	.500	.750	.250	.250	.650	.417	.500	.000	.500	.607	.375	.833	.250	.000	.700	.750	.625	.500	.000	.625

Counts Unlimited Inc.
25286 Jaclyn Avenue
Moreno Valley, CA 92557
951-485-7934

City of Rancho Cucamonga
N/S: Archibald Avenue
E/W: Foothill Boulevard
Weather: Sunny

File Name : RNCARFOPM
Site Code : 9150066
Start Date : 5/28/2009
Page No : 1

Groups Printed- 3 Axle Vehicles

	Archibald Avenue Southbound					Foothill Boulevard Westbound					Archibald Avenue Northbound					Foothill Boulevard Eastbound					
Start Time	Left	Thru	Right	RoR	App. Total	Left	Thru	Right	RoR	App. Total	Left	Thru	Right	RoR	App. Total	Left	Thru	Right	RoR	App. Total	Int. Total
04:00 PM	0	3	0	0	3	0	0	0	0	0	0	0	0	0	0	1	2	0	0	3	6
04:15 PM	0	3	0	0	3	0	0	0	0	0	0	1	0	0	1	0	0	1	0	1	5
04:30 PM	0	0	0	0	0	1	0	0	0	1	0	0	0	0	0	0	0	0	0	0	1
04:45 PM	0	0	0	0	0	0	0	1	0	1	0	0	0	0	0	0	0	0	0	0	1
Total	0	6	0	0	6	1	0	1	0	2	0	1	0	0	1	1	2	1	0	4	13
05:00 PM	0	0	0	0	0	0	0	0	0	0	0	0	0	0	0	0	0	0	0	0	0
05:15 PM	0	0	0	0	0	0	0	0	0	0	0	0	0	0	0	0	0	0	0	0	0
05:30 PM	0	3	0	0	3	0	0	1	0	1	0	0	0	0	0	0	0	0	0	0	4
05:45 PM	0	3	0	0	3	0	0	0	0	0	0	1	0	0	1	0	1	0	0	1	5
Total	0	6	0	0	6	0	0	1	0	1	0	1	0	0	1	0	1	0	0	1	9
Grand Total	0	12	0	0	12	1	0	2	0	3	0	2	0	0	2	1	3	1	0	5	22
Apprch %	0	100	0	0		33.3	0	66.7	0		0	100	0	0		20	60	20	0		
Total %	0	54.5	0	0	54.5	4.5	0	9.1	0	13.6	0	9.1	0	0	9.1	4.5	13.6	4.5	0	22.7	

	Archibald Avenue Southbound					Foothill Boulevard Westbound					Archibald Avenue Northbound					Foothill Boulevard Eastbound					
Start Time	Left	Thru	Right	RoR	App. Total		Thru	Right	RoR	App. Total		Thru	Right	RoR	App. Total		Thru	Right	RoR	App. Total	Int. Total
Peak Hour Analysis From 04:30 PM to 05:15 PM - Peak 1 of 1																					
Peak Hour for Entire Intersection Begins at 04:30 PM																					
04:30 PM	0	0	0	0	0	1	0	0	0	1	0	0	0	0	0	0	0	0	0	0	1
04:45 PM	0	0	0	0	0	0	0	1	0	1	0	0	0	0	0	0	0	0	0	0	1
05:00 PM	0	0	0	0	0	0	0	0	0	0	0	0	0	0	0	0	0	0	0	0	0
05:15 PM	0	0	0	0	0	0	0	0	0	0	0	0	0	0	0	0	0	0	0	0	0
Total Volume	0	0	0	0	0	1	0	1	0	2	0	0	0	0	0	0	0	0	0	0	2
% App. Total	0	0	0	0		50	0	50	0		0	0	0	0		0	0	0	0		
PHF	.000	.000	.000	.000	.000	.250	.000	.250	.000	.500	.000	.000	.000	.000	.000	.000	.000	.000	.000	.000	.500

Counts Unlimited Inc.
25286 Jaclyn Avenue
Moreno Valley, CA 92557
951-485-7934

City of Rancho Cucamonga
N/S: Archibald Avenue
E/W: Foothill Boulevard
Weather: Sunny

File Name : RNCARFOPM
Site Code : 9150066
Start Date : 5/28/2009
Page No : 2

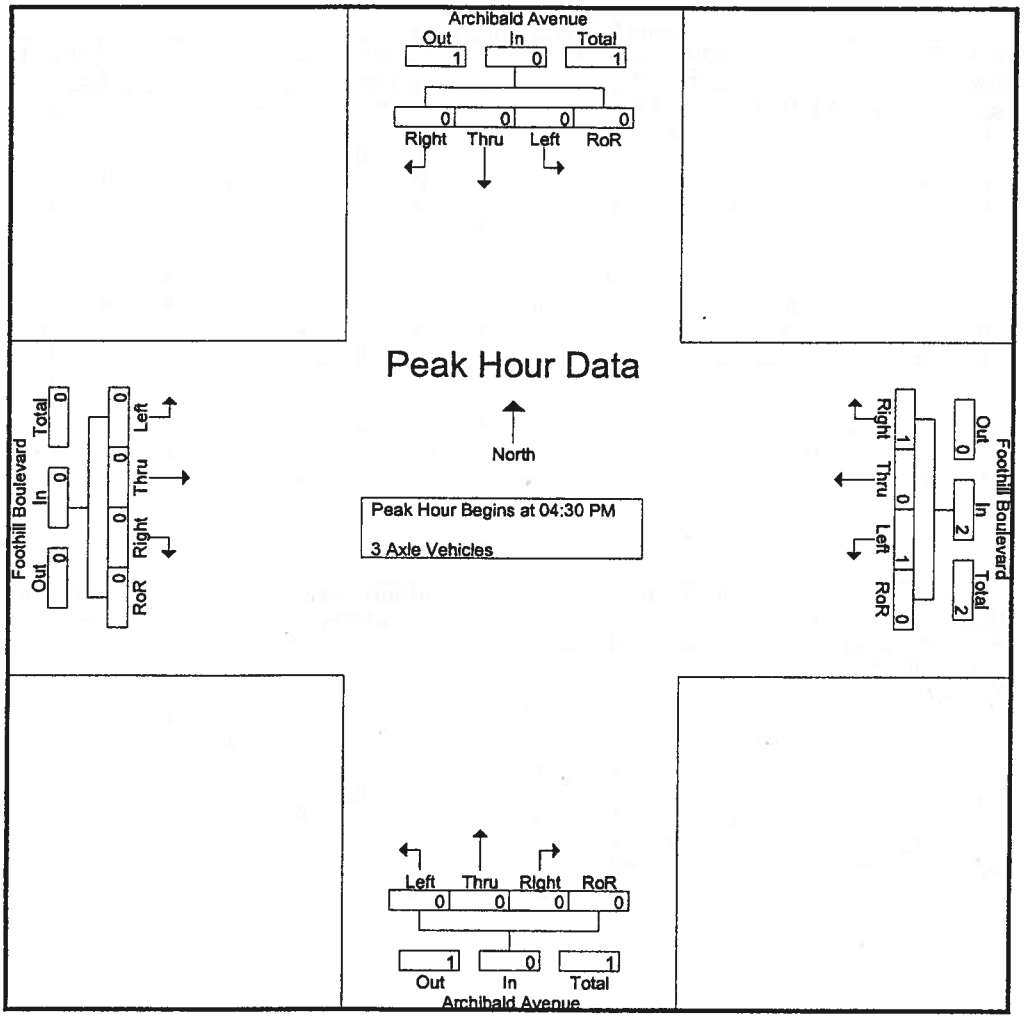

Peak Hour Analysis From 04:30 PM to 05:15 PM - Peak 1 of 1

Peak Hour for Each Approach Begins at:

	04:30 PM					04:30 PM					04:30 PM					04:30 PM				
+0 mins.	0	0	0	0	0	1	0	0	0	1	0	0	0	0	0	0	0	0	0	0
+15 mins.	0	0	0	0	0	0	0	1	0	1	0	0	0	0	0	0	0	0	0	0
+30 mins.	0	0	0	0	0	0	0	0	0	0	0	0	0	0	0	0	0	0	0	0
+45 mins.	0	0	0	0	0	0	0	0	0	0	0	0	0	0	0	0	0	0	0	0
Total Volume	0	0	0	0	0	1	0	1	0	2	0	0	0	0	0	0	0	0	0	0
% App. Total	0	0	0	0		50	0	50	0		0	0	0	0		0	0	0	0	
PHF	.000	.000	.000	.000	.000	.250	.000	.250	.000	.500	.000	.000	.000	.000	.000	.000	.000	.000	.000	.000

Counts Unlimited Inc.
25286 Jaclyn Avenue
Moreno Valley, CA 92557
951-485-7934

City of Rancho Cucamonga
N/S: Archibald Avenue
E/W: Foothill Boulevard
Weather: Sunny

File Name : RNCARFOPM
Site Code : 9150066
Start Date : 5/28/2009
Page No : 1

Groups Printed- 4+ Axle Trucks

	Archibald Avenue Southbound					Foothill Boulevard Westbound					Archibald Avenue Northbound					Foothill Boulevard Eastbound					
Start Time	Left	Thru	Right	RoR	App. Total	Left	Thru	Right	RoR	App. Total	Left	Thru	Right	RoR	App. Total	Left	Thru	Right	RoR	App. Total	Int. Total
04:00 PM	0	0	0	0	0	0	1	0	0	1	0	0	0	0	0	1	0	0	0	1	2
04:15 PM	0	1	0	0	1	0	0	0	0	0	0	0	0	0	0	0	0	0	0	0	1
04:30 PM	0	0	0	0	0	0	0	0	0	0	0	0	0	0	0	0	0	0	0	0	0
04:45 PM	0	0	0	0	0	0	0	0	0	0	0	0	0	0	0	0	1	0	0	1	1
Total	0	1	0	0	1	0	1	0	0	1	0	0	0	0	0	1	1	0	0	2	4
05:00 PM	0	0	1	0	1	0	0	0	0	0	0	2	0	0	2	0	0	0	0	0	3
05:15 PM	0	0	0	0	0	1	2	0	0	3	0	1	0	0	1	0	0	0	0	0	4
05:30 PM	0	0	0	0	0	0	0	0	0	0	0	1	0	0	1	1	0	0	0	1	2
05:45 PM	0	2	0	0	2	0	0	0	0	0	0	0	0	0	0	0	0	0	0	0	2
Total	0	2	1	0	3	1	2	0	0	3	0	4	0	0	4	1	0	0	0	1	11
Grand Total	0	3	1	0	4	1	3	0	0	4	0	4	0	0	4	2	1	0	0	3	15
Apprch %	0	75	25	0		25	75	0	0		0	100	0	0		66.7	33.3	0	0		
Total %	0	20	6.7	0	26.7	6.7	20	0	0	26.7	0	26.7	0	0	26.7	13.3	6.7	0	0	20	

	Archibald Avenue Southbound					Foothill Boulevard Westbound					Archibald Avenue Northbound					Foothill Boulevard Eastbound					
Start Time	Left	Thru	Right	RoR	App. Total		Thru	Right	RoR	App. Total		Thru	Right	RoR	App. Total		Thru	Right	RoR	App. Total	Int. Total
Peak Hour Analysis From 04:30 PM to 05:15 PM - Peak 1 of 1																					
Peak Hour for Entire Intersection Begins at 04:30 PM																					
04:30 PM	0	0	0	0	0	0	0	0	0	0	0	0	0	0	0	0	0	0	0	0	0
04:45 PM	0	0	0	0	0	0	0	0	0	0	0	0	0	0	0	0	1	0	0	1	1
05:00 PM	0	0	1	0	1	0	0	0	0	0	0	2	0	0	2	0	0	0	0	0	3
05:15 PM	0	0	0	0	0	1	2	0	0	3	0	1	0	0	1	0	0	0	0	0	4
Total Volume	0	0	1	0	1	1	2	0	0	3	0	3	0	0	3	0	1	0	0	1	8
% App. Total	0	0	100	0		33.3	66.7	0	0		0	100	0	0		0	100	0	0		
PHF	.000	.000	.250	.000	.250	.250	.250	.000	.000	.250	.000	.375	.000	.000	.375	.000	.250	.000	.000	.250	.500

Counts Unlimited Inc.
25286 Jaclyn Avenue
Moreno Valley, CA 92557
951-485-7934

City of Rancho Cucamonga
N/S: Archibald Avenue
E/W: Foothill Boulevard
Weather: Sunny

File Name : RNCARFOPM
Site Code : 9150066
Start Date : 5/28/2009
Page No : 2

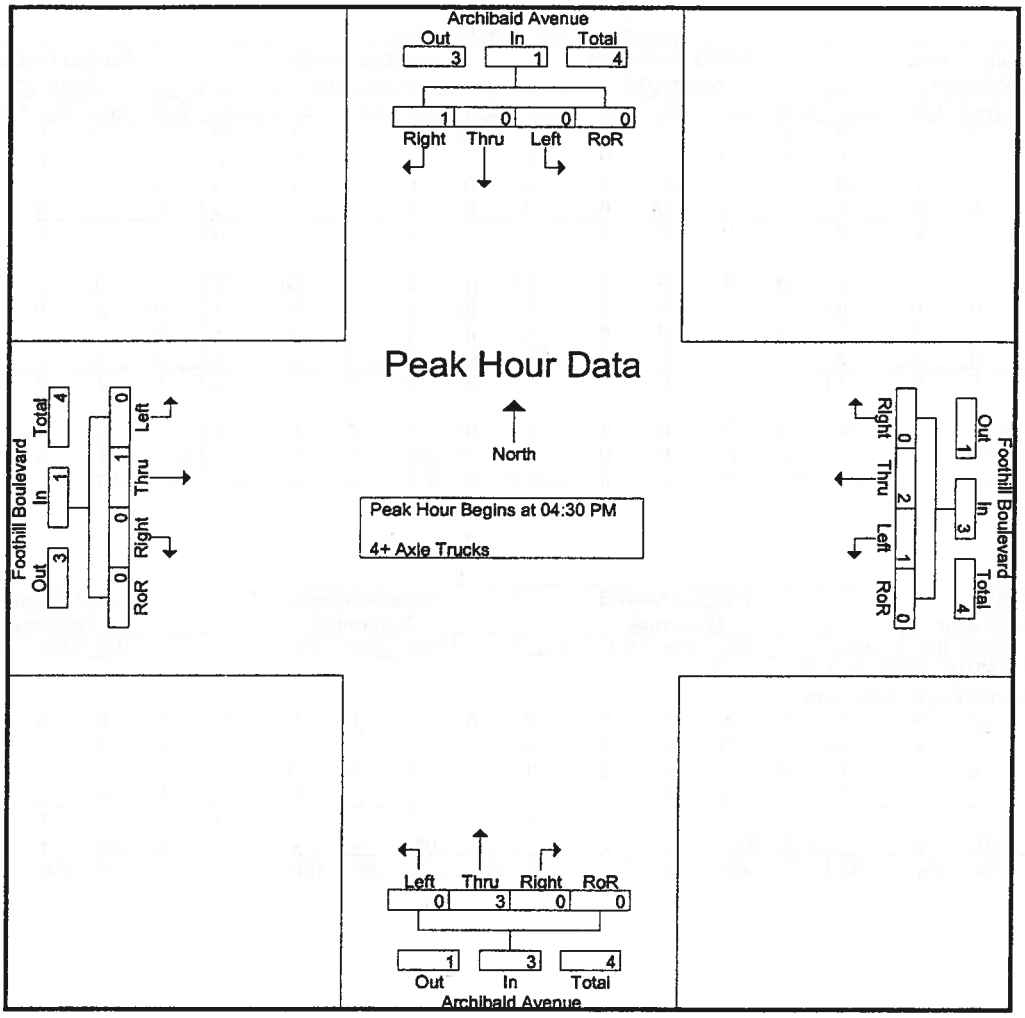

Peak Hour Analysis From 04:30 PM to 05:15 PM - Peak 1 of 1

Peak Hour for Each Approach Begins at:

	04:30 PM					04:30 PM					04:30 PM					04:30 PM				
+0 mins.	0	0	0	0	0	0	0	0	0	0	0	0	0	0	0	0	0	0	0	0
+15 mins.	0	0	0	0	0	0	0	0	0	0	0	0	0	0	0	0	1	0	0	1
+30 mins.	0	0	1	0	1	0	0	0	0	0	0	2	0	0	2	0	0	0	0	0
+45 mins.	0	0	0	0	0	1	2	0	0	3	0	1	0	0	1	0	0	0	0	0
Total Volume	0	0	1	0	1	1	2	0	0	3	0	3	0	0	3	0	1	0	0	1
% App. Total	0	0	100	0		33.3	66.7	0	0		0	100	0	0		0	100	0	0	
PHF	.000	.000	.250	.000	.250	.250	.250	.000	.000	.250	.000	.375	.000	.000	.375	.000	.250	.000	.000	.250

PASSENGER CAR EQUIVALENCY PEAK HOUR COUNT SUMMARY

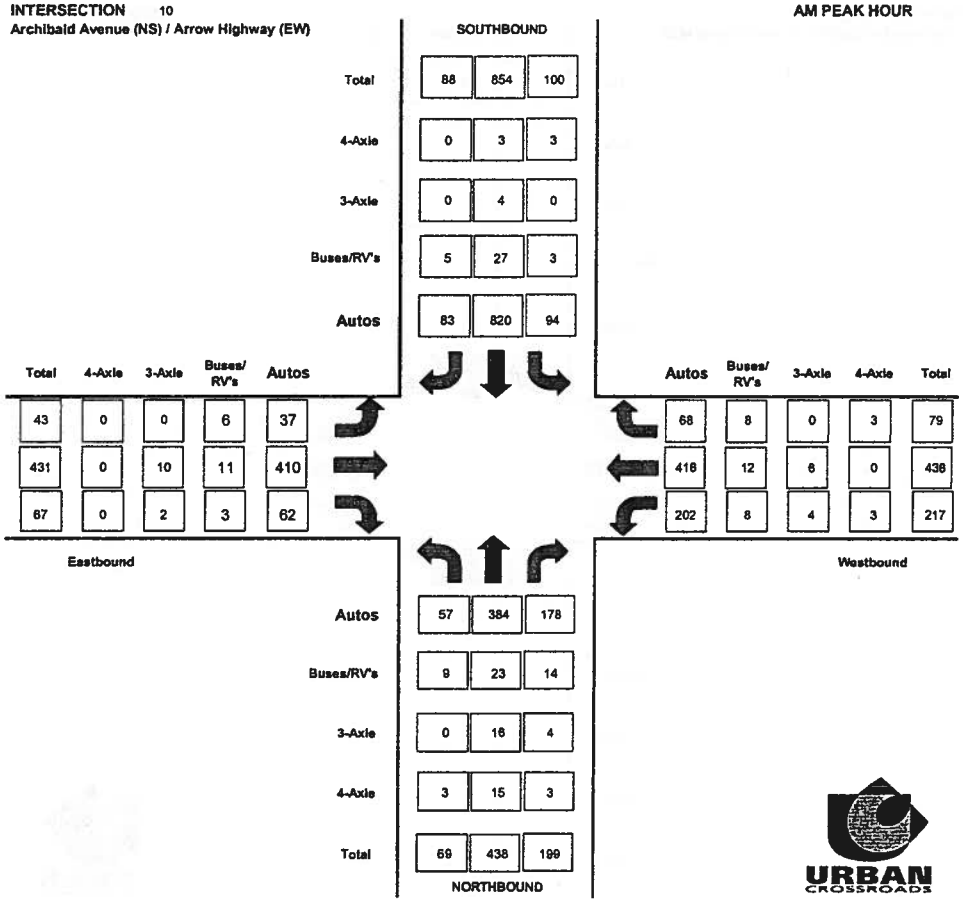

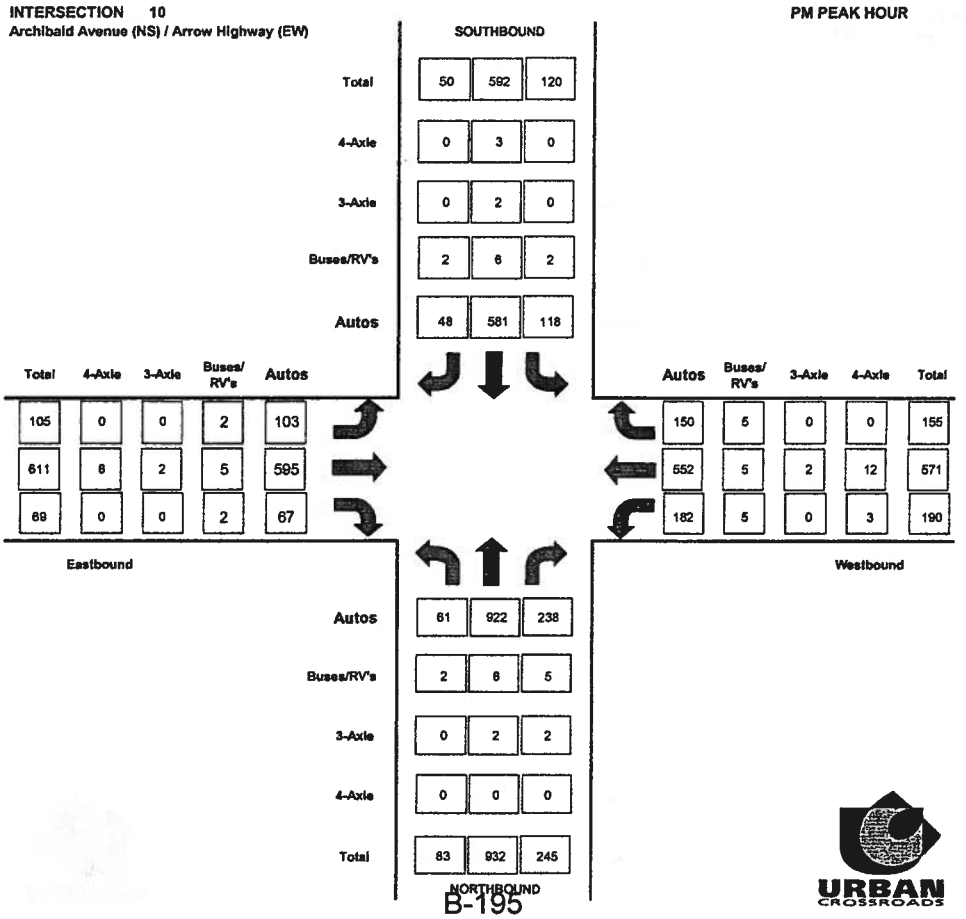

U:\Jobs_09800-07000\09700\09795\Excel\Existing Vols\3 Graphics Summary

RAW PEAK HOUR COUNT SUMMARY

INTERSECTION 10
Archibald Avenue (NS) / Arrow Highway (EW)

AM PEAK HOUR

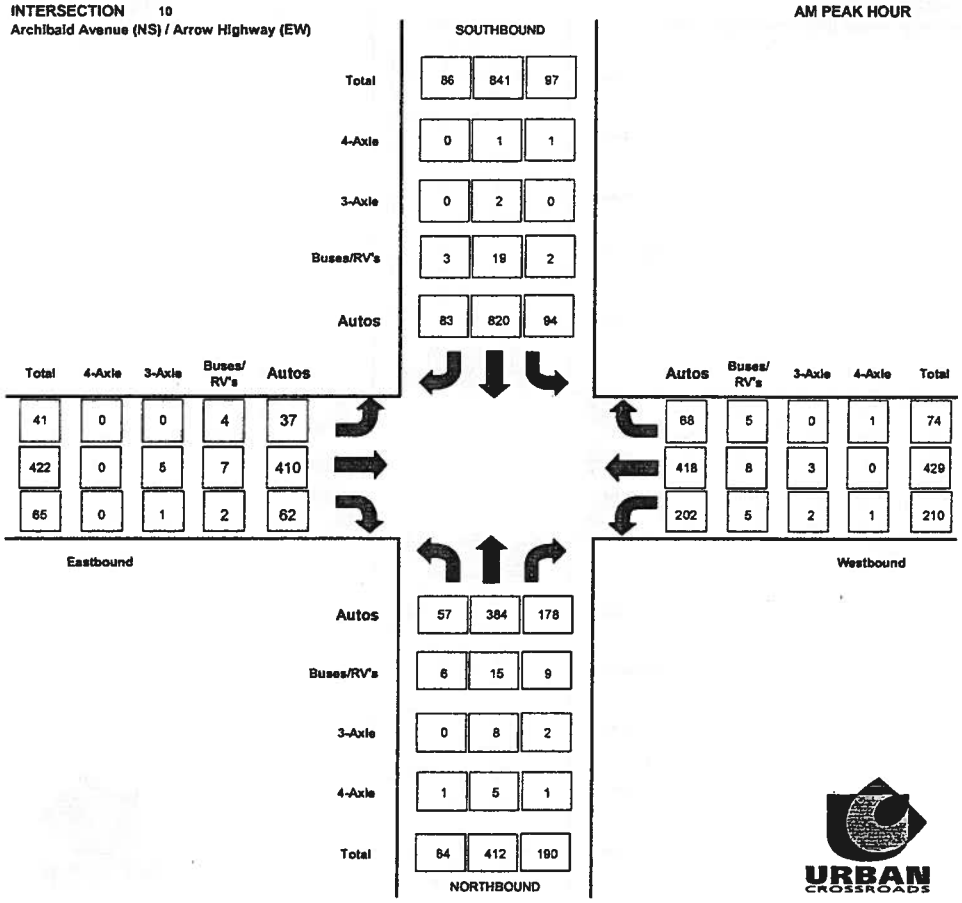

INTERSECTION 10
Archibald Avenue (NS) / Arrow Highway (EW)

PM PEAK HOUR

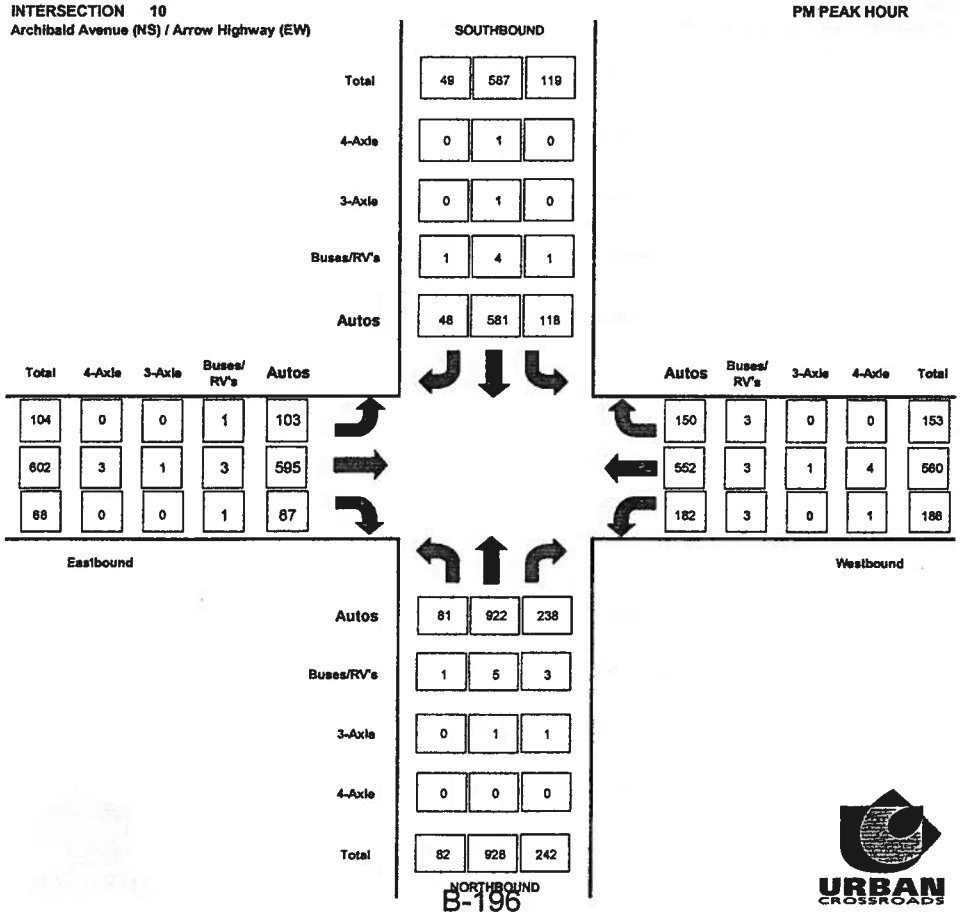

Counts Unlimited Inc.
25286 Jaclyn Avenue
Moreno Valley, CA 92557
951-485-7934

City of Rancho Cucamonga
N/S: Archibald Avenue
E/W: Arrow Highway
Weather: Sunny

File Name : RNCARARAM1
Site Code : 9150024
Start Date : 6/4/2009
Page No : 1

Groups Printed- Passenger Vehicles - Large 2 Axle Vehicles - 3 Axle Vehicles - 4+ Axle Trucks

	Archibald Avenue Southbound					Arrow Highway Westbound					Archibald Avenue Northbound					Arrow Highway Eastbound					
Start Time	Left	Thru	Right	RoR	App. Total	Left	Thru	Right	RoR	App. Total	Left	Thru	Right	RoR	App. Total	Left	Thru	Right	RoR	App. Total	Int. Total
07:00 AM	15	205	7	1	228	22	72	6	11	111	8	67	13	15	103	10	52	5	13	80	522
07:15 AM	18	216	14	2	250	34	100	18	12	164	16	99	23	11	149	14	85	12	5	116	679
07:30 AM	23	209	23	2	257	66	107	14	8	195	12	104	37	21	174	13	100	14	6	133	759
07:45 AM	27	255	26	2	310	56	112	5	10	183	16	90	27	23	156	9	128	19	3	159	808
Total	83	885	70	7	1045	178	391	43	41	653	52	360	100	70	582	46	365	50	27	488	2768
08:00 AM	21	187	20	0	228	38	104	8	7	157	18	118	15	15	166	9	97	7	4	117	668
08:15 AM	26	190	10	3	229	50	106	15	7	178	18	100	33	19	170	10	97	9	3	119	696
08:30 AM	18	182	12	2	214	40	92	14	10	156	30	102	52	25	209	8	115	13	3	139	718
08:45 AM	24	158	11	3	196	41	78	9	7	135	17	98	22	17	154	9	96	11	1	117	602
Total	89	717	53	8	867	169	380	46	31	626	83	418	122	76	699	36	405	40	11	492	2684
Grand Total	172	1602	123	15	1912	347	771	89	72	1279	135	778	222	146	1281	82	770	90	38	980	5452
Apprch %	9	83.8	6.4	0.8		27.1	60.3	7	5.6		10.5	60.7	17.3	11.4		8.4	78.6	9.2	3.9		
Total %	3.2	29.4	2.3	0.3	35.1	6.4	14.1	1.6	1.3	23.5	2.5	14.3	4.1	2.7	23.5	1.5	14.1	1.7	0.7	18	
Passenger Vehicles		1571																			
% Passenger Vehicles	97.7	98.1	95.1	100	97.9	95.7	95.7	92.1	98.6	95.6	89.6	93.3	90.1	98.6	93	89	95.5	94.4	100	95	95.7
Large 2 Axle Vehicles																					
% Large 2 Axle Vehicles	1.7	1.7	4.9	0	1.9	2.6	3.1	6.7	1.4	3.1	8.9	3.9	6.3	0.7	4.4	8.5	2.9	4.4	0	3.4	3.1
3 Axle Vehicles	0	2	0	0	2	3	7	0	0	10	1	17	6	1	25	2	13	1	0	16	53
% 3 Axle Vehicles	0	0.1	0	0	0.1	0.9	0.9	0	0	0.8	0.7	2.2	2.7	0.7	2	2.4	1.7	1.1	0	1.6	1
4+ Axle Trucks	1	1	0	0	2	3	2	1	0	6	1	5	2	0	8	0	0	0	0	0	16
% 4+ Axle Trucks																					

	Archibald Avenue Southbound					Arrow Highway Westbound					Archibald Avenue Northbound					Arrow Highway Eastbound					
Start Time	Left	Thru	Right	RoR	App. Total	Left	Thru	Right	RoR	App. Total	Left	Thru	Right	RoR	App. Total	Left	Thru	Right	RoR	App. Total	Int. Total
Peak Hour Analysis From 07:00 AM to 08:45 AM - Peak 1 of 1																					
Peak Hour for Entire Intersection Begins at 07:30 AM																					
07:30 AM	23	209	23	2	257	**66**	107	14	8	**195**	12	104	37	21	174	**13**	100	14	**6**	133	759
07:45 AM	**27**	**255**	**26**	2	**310**	56	**112**	5	**10**	183	16	90	27	**23**	156	9	**128**	**19**	3	**159**	**808**
08:00 AM	21	187	20	0	228	38	104	8	7	157	**18**	**118**	15	15	166	9	97	7	4	117	668
08:15 AM	26	190	10	3	229	50	106	**15**	7	178	18	100	33	19	170	10	97	9	3	119	696
Total Volume	97	841	79	7	1024	210	429	42	32	713	64	412	112	78	666	41	422	49	16	528	2931
% App. Total	9.5	82.1	7.7	0.7		29.5	60.2	5.9	4.5		9.6	61.9	16.8	11.7		7.8	79.9	9.3	3		
PHF	.898	.825	.760	.583	.826	.795	.958	.700	.800	.914	.889	.873	.757	.848	.957	.788	.824	.645	.667	.830	.907

Counts Unlimited Inc.
25286 Jaclyn Avenue
Moreno Valley, CA 92557
951-485-7934

City of Rancho Cucamonga
N/S: Archibald Avenue
E/W: Arrow Highway
Weather: Sunny

File Name : RNCARARAM1
Site Code : 9150024
Start Date : 6/4/2009
Page No : 2

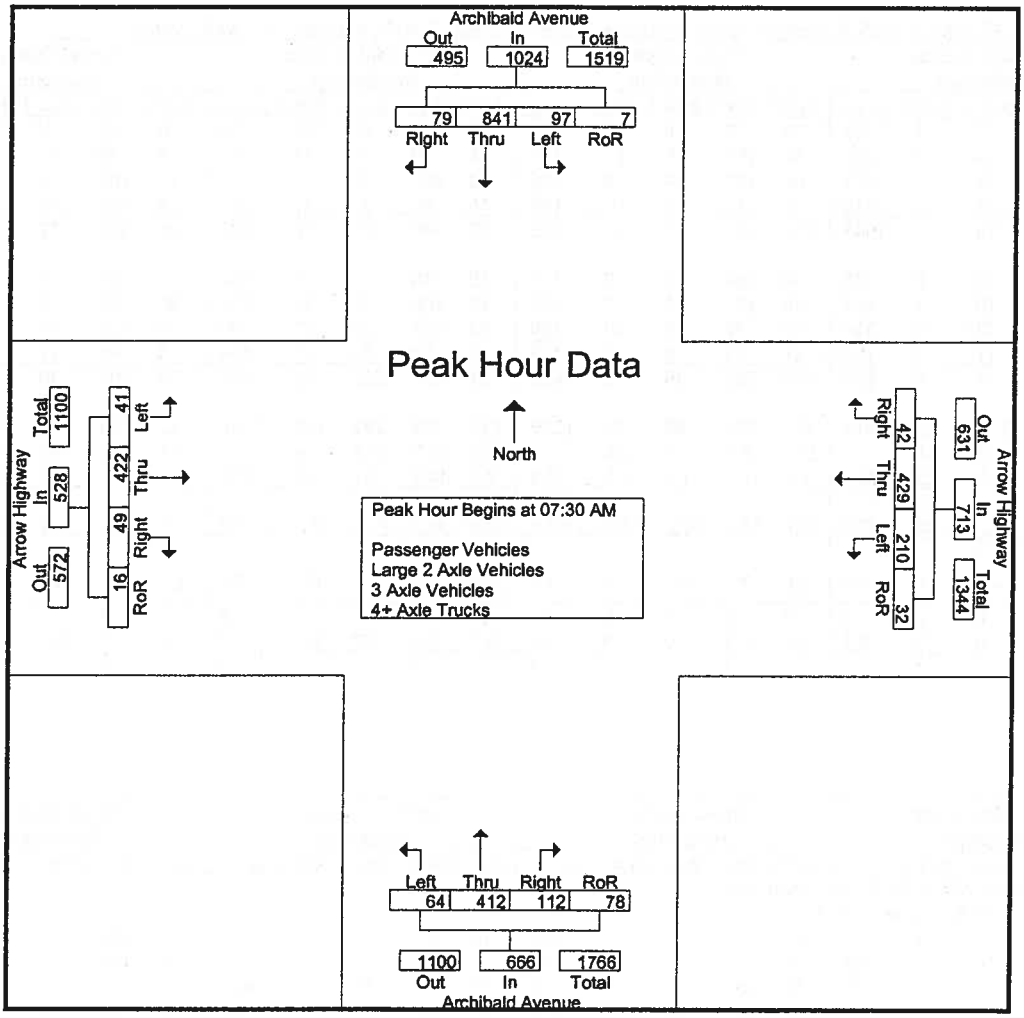

Peak Hour Analysis From 07:00 AM to 08:45 AM - Peak 1 of 1

Peak Hour for Each Approach Begins at:

	07:00 AM					07:30 AM					07:45 AM					07:45 AM				
+0 mins.	15	205	7	1	228	**66**	107	14	8	**195**	16	90	27	23	156	9	**128**	**19**	3	**159**
+15 mins.	18	216	14	**2**	250	56	**112**	5	**10**	183	18	**118**	15	15	166	9	97	7	**4**	117
+30 mins.	23	209	23	2	257	38	104	8	7	157	18	100	33	19	170	**10**	97	9	3	119
+45 mins.	**27**	**255**	**26**	2	**310**	50	106	**15**	7	178	**30**	102	**52**	**25**	**209**	8	115	13	3	139
Total Volume	83	885	70	7	1045	210	429	42	32	713	82	410	127	82	701	36	437	48	13	534
% App. Total	7.9	84.7	6.7	0.7		29.5	60.2	5.9	4.5		11.7	58.5	18.1	11.7		6.7	81.8	9	2.4	
PHF	.769	.868	.673	.875	.843	.795	.958	.700	.800	.914	.683	.869	.611	.820	.839	.900	.854	.632	.813	.840

Counts Unlimited Inc.
25286 Jaclyn Avenue
Moreno Valley, CA 92557
951-485-7934

City of Rancho Cucamonga
N/S: Archibald Avenue
E/W: Arrow Highway
Weather: Sunny

File Name : RNCARARAM1
Site Code : 9150024
Start Date : 6/4/2009
Page No : 1

Groups Printed- Passenger Vehicles

	Archibald Avenue Southbound					Arrow Highway Westbound					Archibald Avenue Northbound					Arrow Highway Eastbound					
Start Time	Left	Thru	Right	RoR	App. Total	Left	Thru	Right	RoR	App. Total	Left	Thru	Right	RoR	App. Total	Left	Thru	Right	RoR	App. Total	Int. Total
07:00 AM	15	200	6	1	222	20	67	6	11	104	7	62	11	14	94	8	46	4	13	71	491
07:15 AM	18	214	14	2	248	33	91	17	12	153	16	92	20	11	139	12	75	12	5	104	644
07:30 AM	22	207	21	2	252	64	105	14	8	191	12	93	34	20	159	12	98	13	6	129	731
07:45 AM	27	248	26	2	303	55	109	4	9	177	13	85	24	23	145	8	125	19	3	155	780
Total	82	869	67	7	1025	172	372	41	40	625	48	332	89	68	537	40	344	48	27	459	2646
08:00 AM	20	181	20	0	221	36	102	8	7	153	18	112	13	15	158	9	95	6	4	114	646
08:15 AM	25	184	9	3	221	47	102	11	7	167	14	94	30	19	157	8	92	8	3	111	656
08:30 AM	18	179	10	2	209	37	87	14	10	148	24	94	46	25	189	8	113	12	3	136	682
08:45 AM	23	158	11	3	195	40	75	8	7	130	17	94	22	17	150	8	91	11	1	111	586
Total	86	702	50	8	846	160	366	41	31	598	73	394	111	76	654	33	391	37	11	472	2570
Grand Total	168	1571	117	15	1871	332	738	82	71	1223	121	726	200	144	1191	73	735	85	38	931	5216
Apprch %	9	84	6.3	0.8		27.1	60.3	6.7	5.8		10.2	61	16.8	12.1		7.8	78.9	9.1	4.1		
Total %	3.2	30.1	2.2	0.3	35.9	6.4	14.1	1.6	1.4	23.4	2.3	13.9	3.8	2.8	22.8	1.4	14.1	1.6	0.7	17.8	

	Archibald Avenue Southbound					Arrow Highway Westbound					Archibald Avenue Northbound					Arrow Highway Eastbound					
Start Time	Left	Thru	Right	RoR	App. Total		Thru	Right	RoR	App. Total		Thru	Right	RoR	App. Total		Thru	Right	RoR	App. Total	Int. Total
Peak Hour Analysis From 07:30 AM to 08:15 AM - Peak 1 of 1																					
Peak Hour for Entire Intersection Begins at 07:30 AM																					
07:30 AM	22	207	21	2	252	**64**	105	**14**	8	**191**	12	93	**34**	20	**159**	**12**	98	13	**6**	129	731
07:45 AM	**27**	**248**	**26**	2	**303**	55	**109**	4	**9**	177	13	85	24	**23**	145	8	**125**	**19**	3	**155**	**780**
08:00 AM	20	181	20	0	221	36	102	8	7	153	**18**	**112**	13	15	158	9	95	6	4	114	646
08:15 AM	25	184	9	3	221	47	102	11	7	167	14	94	30	19	157	8	92	8	3	111	656
Total Volume	94	820	76	7	997	202	418	37	31	688	57	384	101	77	619	37	410	46	16	509	2813
% App. Total	9.4	82.2	7.6	0.7		29.4	60.8	5.4	4.5		9.2	62	16.3	12.4		7.3	80.6	9	3.1		
PHF	.870	.827	.731	.583	.823	.789	.959	.661	.861	.901	.792	.857	.743	.837	.973	.771	.820	.605	.667	.821	.902

Counts Unlimited Inc.
25286 Jaclyn Avenue
Moreno Valley, CA 92557
951-485-7934

City of Rancho Cucamonga
N/S: Archibald Avenue
E/W: Arrow Highway
Weather: Sunny

File Name : RNCARARAM1
Site Code : 9150024
Start Date : 6/4/2009
Page No : 2

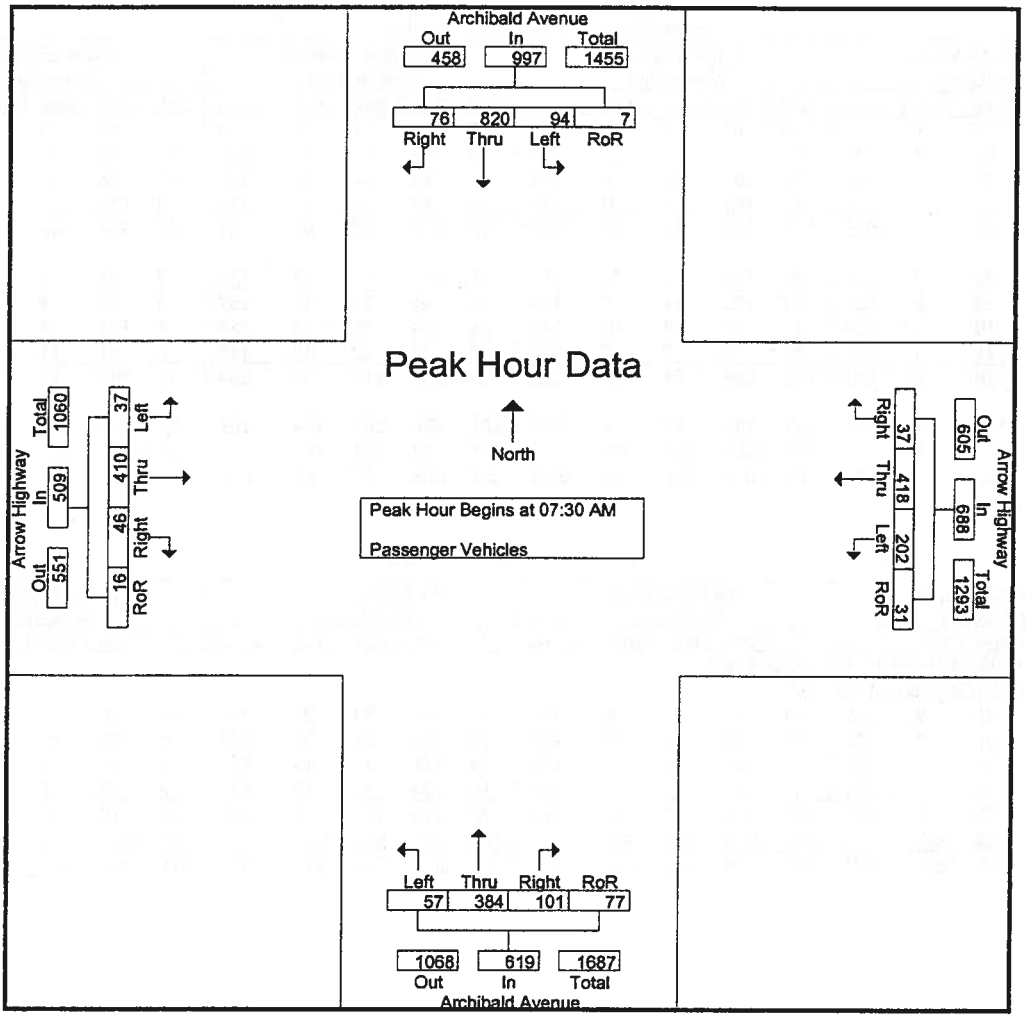

Peak Hour Analysis From 07:30 AM to 08:15 AM - Peak 1 of 1

Peak Hour for Each Approach Begins at:

	07:30 AM					07:30 AM					07:30 AM					07:30 AM				
+0 mins.	22	207	21	2	252	**64**	105	**14**	8	**191**	12	93	**34**	20	**159**	**12**	98	13	**6**	129
+15 mins.	**27**	**248**	**26**	2	**303**	55	**109**	4	**9**	177	13	85	24	**23**	145	8	**125**	**19**	3	**155**
+30 mins.	20	181	20	0	221	36	102	8	7	153	**18**	**112**	13	15	158	9	95	6	4	114
+45 mins.	25	184	9	**3**	221	47	102	11	7	167	14	94	30	19	157	8	92	8	3	111
Total Volume	94	820	76	7	997	202	418	37	31	688	57	384	101	77	619	37	410	46	16	509
% App. Total	9.4	82.2	7.6	0.7		29.4	60.8	5.4	4.5		9.2	62	16.3	12.4		7.3	80.6	9	3.1	
PHF	.870	.827	.731	.583	.823	.789	.959	.661	.861	.901	.792	.857	.743	.837	.973	.771	.820	.605	.667	.821

Counts Unlimited Inc.
25286 Jaclyn Avenue
Moreno Valley, CA 92557
951-485-7934

City of Rancho Cucamonga
N/S: Archibald Avenue
E/W: Arrow Highway
Weather: Sunny

File Name : RNCARARAM1
Site Code : 9150024
Start Date : 6/4/2009
Page No : 1

Groups Printed- Large 2 Axle Vehicles

	Archibald Avenue Southbound					Arrow Highway Westbound					Archibald Avenue Northbound					Arrow Highway Eastbound					
Start Time	Left	Thru	Right	RoR	App. Total	Left	Thru	Right	RoR	App. Total	Left	Thru	Right	RoR	App. Total	Left	Thru	Right	RoR	App. Total	Int. Total
07:00 AM	0	5	1	0	6	1	2	0	0	3	0	2	1	0	3	1	4	1	0	6	18
07:15 AM	0	2	0	0	2	0	7	1	0	8	0	4	2	0	6	2	6	0	0	8	24
07:30 AM	1	2	2	0	5	1	1	0	0	2	0	8	2	1	11	1	1	1	0	3	21
07:45 AM	0	6	0	0	6	0	2	1	1	4	3	3	2	0	8	1	0	0	0	1	19
Total	1	15	3	0	19	2	12	2	1	17	3	17	7	1	28	5	11	2	0	18	82
08:00 AM	0	4	0	0	4	2	2	0	0	4	0	3	2	0	5	0	1	1	0	2	15
08:15 AM	1	6	1	0	8	2	3	3	0	8	3	1	2	0	6	2	5	0	0	7	29
08:30 AM	0	3	2	0	5	2	4	0	0	6	6	5	3	0	14	0	2	1	0	3	28
08:45 AM	1	0	0	0	1	1	3	1	0	5	0	4	0	0	4	0	3	0	0	3	13
Total	2	13	3	0	18	7	12	4	0	23	9	13	7	0	29	2	11	2	0	15	85
Grand Total	3	28	6	0	37	9	24	6	1	40	12	30	14	1	57	7	22	4	0	33	167
Apprch %	8.1	75.7	16.2	0		22.5	60	15	2.5		21.1	52.6	24.6	1.8		21.2	66.7	12.1	0		
Total %	1.8	16.8	3.6	0	22.2	5.4	14.4	3.6	0.6	24	7.2	18	8.4	0.6	34.1	4.2	13.2	2.4	0	19.8	

	Archibald Avenue Southbound					Arrow Highway Westbound					Archibald Avenue Northbound					Arrow Highway Eastbound					
Start Time	Left	Thru	Right	RoR	App. Total		Thru	Right	RoR	App. Total		Thru	Right	RoR	App. Total		Thru	Right	RoR	App. Total	Int. Total
Peak Hour Analysis From 07:30 AM to 08:15 AM - Peak 1 of 1																					
Peak Hour for Entire Intersection Begins at 07:30 AM																					
07:30 AM	1	2	2	0	5	1	1	0	0	2	0	8	2	1	11	1	1	1	0	3	21
07:45 AM	0	6	0	0	6	0	2	1	1	4	3	3	2	0	8	1	0	0	0	1	19
08:00 AM	0	4	0	0	4	2	2	0	0	4	0	3	2	0	5	0	1	1	0	2	15
08:15 AM	1	6	1	0	8	2	3	3	0	8	3	1	2	0	6	2	5	0	0	7	29
Total Volume	2	18	3	0	23	5	8	4	1	18	6	15	8	1	30	4	7	2	0	13	84
% App. Total	8.7	78.3	13	0		27.8	44.4	22.2	5.6		20	50	26.7	3.3		30.8	53.8	15.4	0		
PHF	.500	.750	.375	.000	.719	.625	.667	.333	.250	.563	.500	.469	1.000	.250	.682	.500	.350	.500	.000	.464	.724

Counts Unlimited Inc.
25286 Jaclyn Avenue
Moreno Valley, CA 92557
951-485-7934

City of Rancho Cucamonga
N/S: Archibald Avenue
E/W: Arrow Highway
Weather: Sunny

File Name : RNCARARAM1
Site Code : 9150024
Start Date : 6/4/2009
Page No : 2

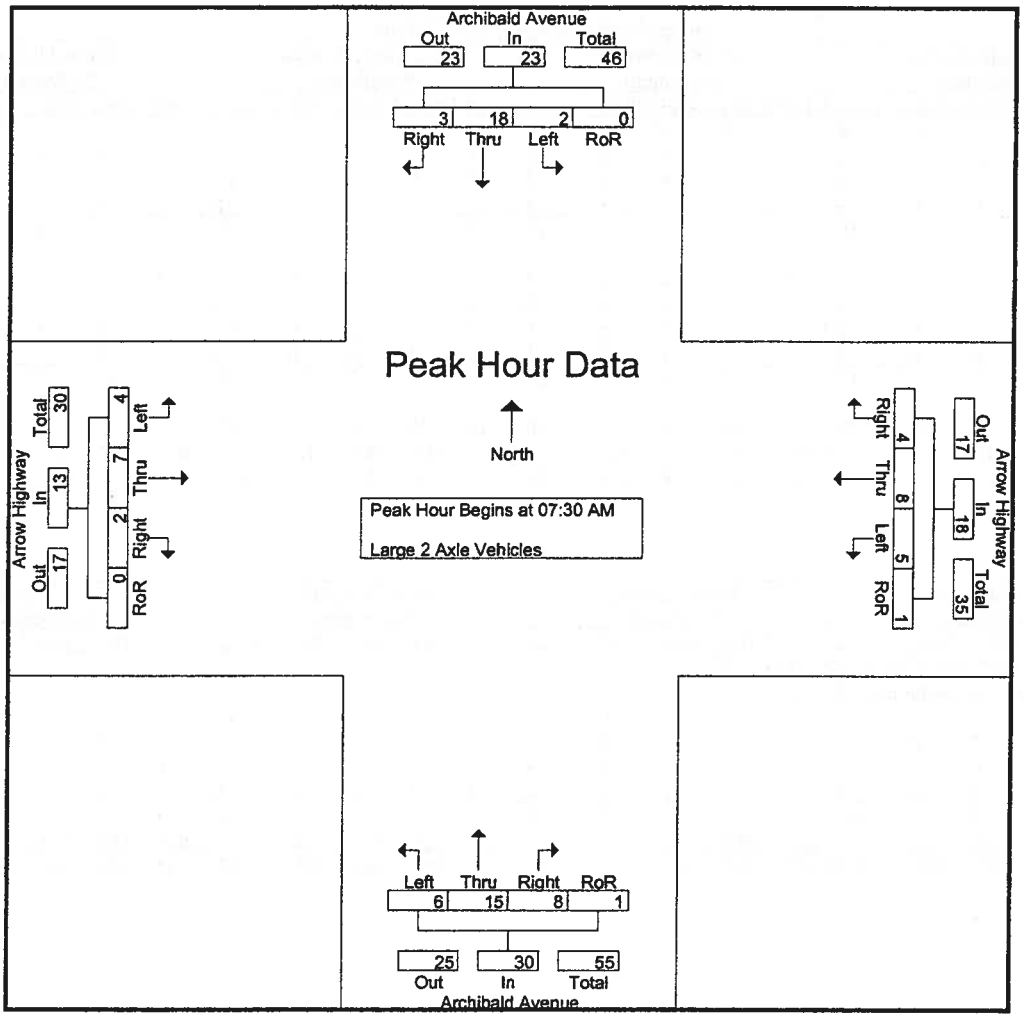

Peak Hour Analysis From 07:30 AM to 08:15 AM - Peak 1 of 1

Peak Hour for Each Approach Begins at:

	07:30 AM					07:30 AM					07:30 AM					07:30 AM				
+0 mins.	1	2	2	0	5	1	1	0	0	2	0	8	2	1	11	1	1	1	0	3
+15 mins.	0	6	0	0	6	0	2	1	1	4	3	3	2	0	8	1	0	0	0	1
+30 mins.	0	4	0	0	4	2	2	0	0	4	0	3	2	0	5	0	1	1	0	2
+45 mins.	1	6	1	0	8	2	3	3	0	8	3	1	2	0	6	2	5	0	0	7
Total Volume	2	18	3	0	23	5	8	4	1	18	6	15	8	1	30	4	7	2	0	13
% App. Total	8.7	78.3	13	0		27.8	44.4	22.2	5.6		20	50	26.7	3.3		30.8	53.8	15.4	0	
PHF	.500	.750	.375	.000	.719	.625	.667	.333	.250	.563	.500	.469	1.000	.250	.682	.500	.350	.500	.000	.464

Counts Unlimited Inc.
25286 Jaclyn Avenue
Moreno Valley, CA 92557
951-485-7934

City of Rancho Cucamonga
N/S: Archibald Avenue
E/W: Arrow Highway
Weather: Sunny

File Name : RNCARARAM1
Site Code : 9150024
Start Date : 6/4/2009
Page No : 1

Groups Printed- 3 Axle Vehicles

	Archibald Avenue Southbound					Arrow Highway Westbound					Archibald Avenue Northbound					Arrow Highway Eastbound					
Start Time	Left	Thru	Right	RoR	App. Total	Left	Thru	Right	RoR	App. Total	Left	Thru	Right	RoR	App. Total	Left	Thru	Right	RoR	App. Total	Int. Total
07:00 AM	0	0	0	0	0	1	2	0	0	3	1	3	1	1	6	1	2	0	0	3	12
07:15 AM	0	0	0	0	0	0	1	0	0	1	0	3	0	0	3	0	4	0	0	4	8
07:30 AM	0	0	0	0	0	1	1	0	0	2	0	3	1	0	4	0	1	0	0	1	7
07:45 AM	0	1	0	0	1	0	1	0	0	1	0	1	1	0	2	0	3	0	0	3	7
Total	0	1	0	0	1	2	5	0	0	7	1	10	3	1	15	1	10	0	0	11	34
08:00 AM	0	1	0	0	1	0	0	0	0	0	0	1	0	0	1	0	1	0	0	1	3
08:15 AM	0	0	0	0	0	1	1	0	0	2	0	3	0	0	3	0	0	1	0	1	6
08:30 AM	0	0	0	0	0	0	1	0	0	1	0	3	3	0	6	0	0	0	0	0	7
08:45 AM	0	0	0	0	0	0	0	0	0	0	0	0	0	0	0	1	2	0	0	3	3
Total	0	1	0	0	1	1	2	0	0	3	0	7	3	0	10	1	3	1	0	5	19
Grand Total	0	2	0	0	2	3	7	0	0	10	1	17	6	1	25	2	13	1	0	16	53
Apprch %	0	100	0	0		30	70	0	0		4	68	24	4		12.5	81.2	6.2	0		
Total %	0	3.8	0	0	3.8	5.7	13.2	0	0	18.9	1.9	32.1	11.3	1.9	47.2	3.8	24.5	1.9	0	30.2	

	Archibald Avenue Southbound					Arrow Highway Westbound					Archibald Avenue Northbound					Arrow Highway Eastbound					
Start Time	Left	Thru	Right	RoR	App. Total		Thru	Right	RoR	App. Total		Thru	Right	RoR	App. Total		Thru	Right	RoR	App. Total	Int. Total
Peak Hour Analysis From 07:30 AM to 08:15 AM - Peak 1 of 1																					
Peak Hour for Entire Intersection Begins at 07:30 AM																					
07:30 AM	0	0	0	0	0	1	1	0	0	2	0	3	1	0	4	0	1	0	0	1	7
07:45 AM	0	1	0	0	1	0	1	0	0	1	0	1	1	0	2	0	3	0	0	3	7
08:00 AM	0	1	0	0	1	0	0	0	0	0	0	1	0	0	1	0	1	0	0	1	3
08:15 AM	0	0	0	0	0	1	1	0	0	2	0	3	0	0	3	0	0	1	0	1	6
Total Volume	0	2	0	0	2	2	3	0	0	5	0	8	2	0	10	0	5	1	0	6	23
% App. Total	0	100	0	0		40	60	0	0		0	80	20	0		0	83.3	16.7	0		
PHF	.000	.500	.000	.000	.500	.500	.750	.000	.000	.625	.000	.667	.500	.000	.625	.000	.417	.250	.000	.500	.821

Counts Unlimited Inc.
25286 Jaclyn Avenue
Moreno Valley, CA 92557
951-485-7934

City of Rancho Cucamonga
N/S: Archibald Avenue
E/W: Arrow Highway
Weather: Sunny

File Name : RNCARARAM1
Site Code : 9150024
Start Date : 6/4/2009
Page No : 2

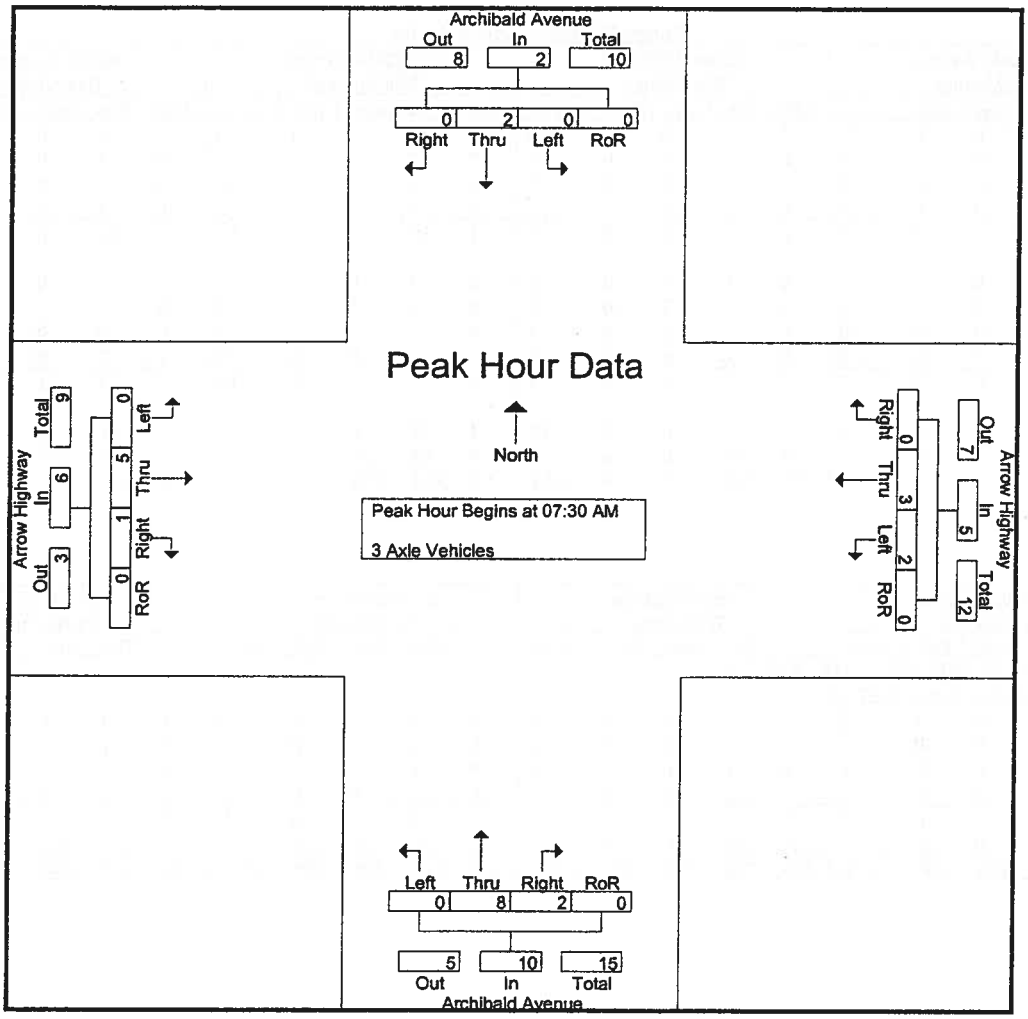

Peak Hour Analysis From 07:30 AM to 08:15 AM - Peak 1 of 1

Peak Hour for Each Approach Begins at:

	07:30 AM					07:30 AM					07:30 AM					07:30 AM				
+0 mins.	0	0	0	0	0	1	1	0	0	2	0	3	1	0	4	0	1	0	0	1
+15 mins.	0	1	0	0	1	0	1	0	0	1	0	1	1	0	2	0	3	0	0	3
+30 mins.	0	1	0	0	1	0	0	0	0	0	0	1	0	0	1	0	1	0	0	1
+45 mins.	0	0	0	0	0	1	1	0	0	2	0	3	0	0	3	0	0	1	0	1
Total Volume	0	2	0	0	2	2	3	0	0	5	0	8	2	0	10	0	5	1	0	6
% App. Total	0	100	0	0		40	60	0	0		0	80	20	0		0	83.3	16.7	0	
PHF	.000	.500	.000	.000	.500	.500	.750	.000	.000	.625	.000	.667	.500	.000	.625	.000	.417	.250	.000	.500

Counts Unlimited Inc.
25286 Jaclyn Avenue
Moreno Valley, CA 92557
951-485-7934

City of Rancho Cucamonga
N/S: Archibald Avenue
E/W: Arrow Highway
Weather: Sunny

File Name : RNCARARAM1
Site Code : 9150024
Start Date : 6/4/2009
Page No : 1

Groups Printed- 4+ Axle Trucks

	Archibald Avenue Southbound					Arrow Highway Westbound					Archibald Avenue Northbound					Arrow Highway Eastbound					
Start Time	Left	Thru	Right	RoR	App. Total	Left	Thru	Right	RoR	App. Total	Left	Thru	Right	RoR	App. Total	Left	Thru	Right	RoR	App. Total	Int. Total
07:00 AM	0	0	0	0	0	0	1	0	0	1	0	0	0	0	0	0	0	0	0	0	1
07:15 AM	0	0	0	0	0	1	1	0	0	2	0	0	1	0	1	0	0	0	0	0	3
07:30 AM	0	0	0	0	0	0	0	0	0	0	0	0	0	0	0	0	0	0	0	0	0
07:45 AM	0	0	0	0	0	1	0	0	0	1	0	1	0	0	1	0	0	0	0	0	2
Total	0	0	0	0	0	2	2	0	0	4	0	1	1	0	2	0	0	0	0	0	6
08:00 AM	1	1	0	0	2	0	0	0	0	0	0	2	0	0	2	0	0	0	0	0	4
08:15 AM	0	0	0	0	0	0	0	1	0	1	1	2	1	0	4	0	0	0	0	0	5
08:30 AM	0	0	0	0	0	1	0	0	0	1	0	0	0	0	0	0	0	0	0	0	1
08:45 AM	0	0	0	0	0	0	0	0	0	0	0	0	0	0	0	0	0	0	0	0	0
Total	1	1	0	0	2	1	0	1	0	2	1	4	1	0	6	0	0	0	0	0	10
Grand Total	1	1	0	0	2	3	2	1	0	6	1	5	2	0	8	0	0	0	0	0	16
Apprch %	50	50	0	0		50	33.3	16.7	0		12.5	62.5	25	0		0	0	0	0		
Total %	6.2	6.2	0	0	12.5	18.8	12.5	6.2	0	37.5	6.2	31.2	12.5	0	50	0	0	0	0	0	

	Archibald Avenue Southbound					Arrow Highway Westbound					Archibald Avenue Northbound					Arrow Highway Eastbound					
Start Time	Left	Thru	Right	RoR	App. Total		Thru	Right	RoR	App. Total		Thru	Right	RoR	App. Total		Thru	Right	RoR	App. Total	Int. Total
Peak Hour Analysis From 07:30 AM to 08:15 AM - Peak 1 of 1																					
Peak Hour for Entire Intersection Begins at 07:30 AM																					
07:30 AM	0	0	0	0	0	0	0	0	0	0	0	0	0	0	0	0	0	0	0	0	0
07:45 AM	0	0	0	0	0	1	0	0	0	1	0	1	0	0	1	0	0	0	0	0	2
08:00 AM	1	1	0	0	2	0	0	0	0	0	0	2	0	0	2	0	0	0	0	0	4
08:15 AM	0	0	0	0	0	0	0	1	0	1	1	2	1	0	4	0	0	0	0	0	5
Total Volume	1	1	0	0	2	1	0	1	0	2	1	5	1	0	7	0	0	0	0	0	11
% App. Total	50	50	0	0		50	0	50	0		14.3	71.4	14.3	0		0	0	0	0		
PHF	.250	.250	.000	.000	.250	.250	.000	.250	.000	.500	.250	.625	.250	.000	.438	.000	.000	.000	.000	.000	.550

Counts Unlimited Inc.
25286 Jaclyn Avenue
Moreno Valley, CA 92557
951-485-7934

City of Rancho Cucamonga
N/S: Archibald Avenue
E/W: Arrow Highway
Weather: Sunny

File Name : RNCARARAM1
Site Code : 9150024
Start Date : 6/4/2009
Page No : 2

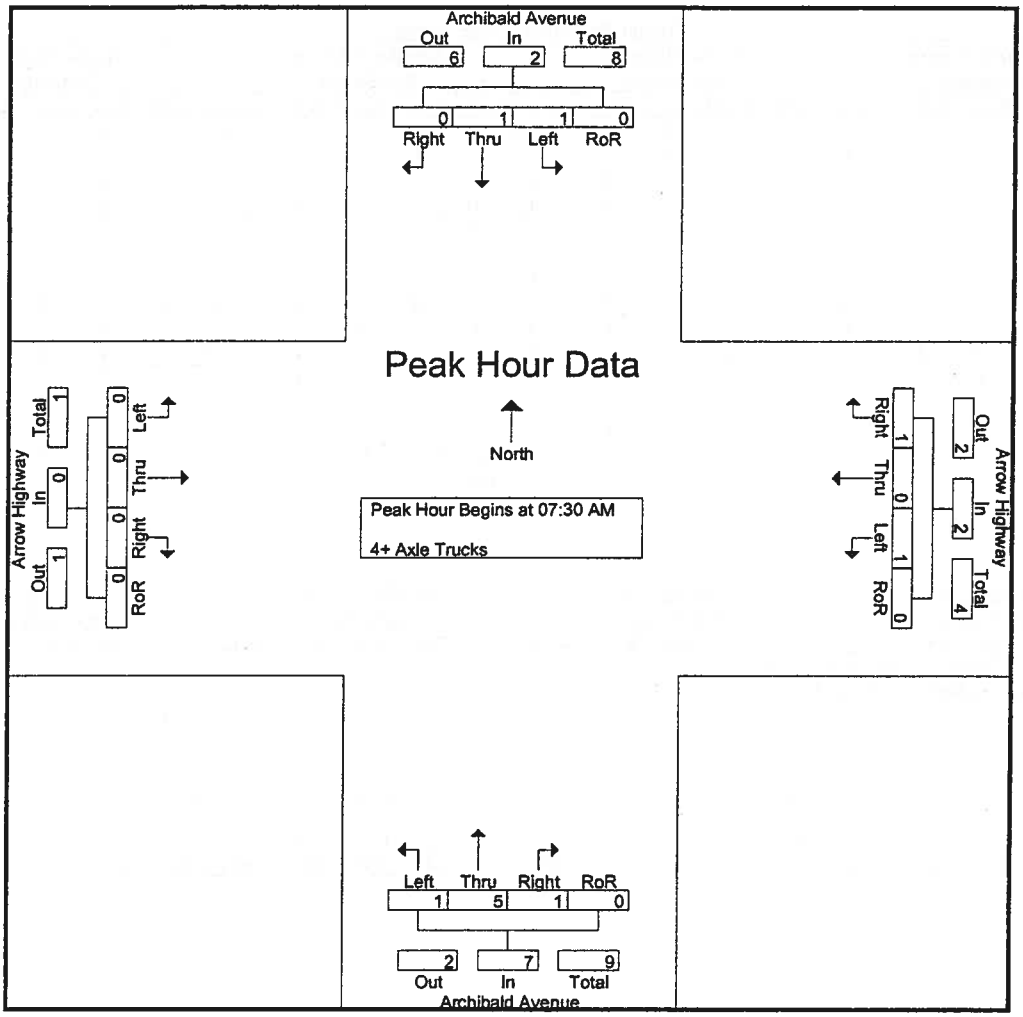

Peak Hour Analysis From 07:30 AM to 08:15 AM - Peak 1 of 1

Peak Hour for Each Approach Begins at:

	07:30 AM					07:30 AM					07:30 AM					07:30 AM				
+0 mins.	0	0	0	0	0	0	0	0	0	0	0	0	0	0	0	0	0	0	0	0
+15 mins.	0	0	0	0	0	1	0	0	0	1	0	1	0	0	1	0	0	0	0	0
+30 mins.	1	1	0	0	2	0	0	0	0	0	0	2	0	0	2	0	0	0	0	0
+45 mins.	0	0	0	0	0	0	0	1	0	1	1	2	1	0	4	0	0	0	0	0
Total Volume	1	1	0	0	2	1	0	1	0	2	1	5	1	0	7	0	0	0	0	0
% App. Total	50	50	0	0		50	0	50	0		14.3	71.4	14.3	0		0	0	0	0	
PHF	.250	.250	.000	.000	.250	.250	.000	.250	.000	.500	.250	.625	.250	.000	.438	.000	.000	.000	.000	.000

Counts Unlimited Inc.
25286 Jaclyn Avenue
Moreno Valley, CA 92557
951-485-7934

City of Rancho Cuamonga
N/S: Archibald Avenue
E/W: Arrow Highway
Weather: Sunny

File Name : RNCARARPM1
Site Code : 9150024
Start Date : 6/4/2009
Page No : 1

Groups Printed- Passenger Vehicles - Large 2 Axle Vehicles - 3 Axle Vehicles - 4+ Axle Trucks

	Archibald Avenue Southbound					Arrow Highway Westbound					Archibald Avenue Northbound					Arrow Highway Eastbound					
Start Time	Left	Thru	Right	RoR	App. Total	Left	Thru	Right	RoR	App. Total	Left	Thru	Right	RoR	App. Total	Left	Thru	Right	RoR	App. Total	Int. Total
04:00 PM	21	142	5	3	171	44	127	26	12	209	20	193	41	26	280	28	120	15	4	167	827
04:15 PM	34	130	9	7	180	40	135	20	14	209	17	214	36	30	297	19	129	3	5	156	842
04:30 PM	28	117	10	4	159	45	122	26	16	209	25	200	38	32	295	21	143	8	6	178	841
04:45 PM	29	134	12	1	176	30	143	22	12	207	19	227	27	36	309	22	133	9	7	171	863
Total	112	523	36	15	686	159	527	94	54	834	81	834	142	124	1181	90	525	35	22	672	3373
05:00 PM	33	165	11	0	209	60	169	29	21	279	13	244	39	20	316	27	148	6	5	186	990
05:15 PM	29	152	12	2	195	39	125	21	11	196	27	239	28	23	317	35	148	12	7	202	910
05:30 PM	28	136	10	1	175	57	123	19	18	217	23	218	37	32	310	20	173	18	4	215	917
05:45 PM	31	135	19	2	187	52	104	23	13	192	24	226	37	24	311	36	115	14	3	168	858
Total	121	588	52	5	766	208	521	92	63	884	87	927	141	99	1254	118	584	50	19	771	3675
Grand Total	233	1111	88	20	1452	367	1048	186	117	1718	168	1761	283	223	2435	208	1109	85	41	1443	7048
Apprch %	16	76.5	6.1	1.4		21.4	61	10.8	6.8		6.9	72.3	11.6	9.2		14.4	76.9	5.9	2.8		
Total %	3.3	15.8	1.2	0.3	20.6	5.2	14.9	2.6	1.7	24.4	2.4	25	4	3.2	34.5	3	15.7	1.2	0.6	20.5	
Passenger Vehicles		1090					1033					1744					1087				
% Passenger Vehicles	98.7	98.1	96.6	100	98.1	97.3	98.6	98.4	98.3	98.3	98.2	99	97.9	98.2	98.8	98.1	98	96.5	100	98	98.4
Large 2 Axle Vehicles																					
% Large 2 Axle Vehicles	1.3	1.5	3.4	0	1.6	1.9	0.8	1.1	1.7	1.1	1.8	0.8	1.8	1.3	1	1.9	0.5	3.5	0	0.9	1.1
3 Axle Vehicles	0	2	0	0	2	0	1	0	0	1	0	3	0	1	4	0	12	0	0	12	19
% 3 Axle Vehicles	0	0.2	0	0	0.1	0	0.1	0	0	0.1	0	0.2	0	0.4	0.2	0	1.1	0	0	0.8	0.3
4+ Axle Trucks	0	2	0	0	2	3	6	1	0	10	0	0	1	0	1	0	4	0	0	4	17
% 4+ Axle Trucks																					

	Archibald Avenue Southbound					Arrow Highway Westbound					Archibald Avenue Northbound					Arrow Highway Eastbound					
Start Time	Left	Thru	Right	RoR	App. Total	Left	Thru	Right	RoR	App. Total	Left	Thru	Right	RoR	App. Total	Left	Thru	Right	RoR	App. Total	Int. Total
Peak Hour Analysis From 04:00 PM to 05:45 PM - Peak 1 of 1																					
Peak Hour for Entire Intersection Begins at 04:45 PM																					
04:45 PM	29	134	**12**	1	176	30	143	22	12	207	19	227	27	**36**	309	22	133	9	7	171	863
05:00 PM	**33**	**165**	11	0	**209**	**60**	**169**	**29**	**21**	**279**	13	**244**	**39**	20	316	27	148	6	5	186	**990**
05:15 PM	29	152	12	**2**	195	39	125	21	11	196	**27**	239	28	23	**317**	**35**	148	12	7	202	910
05:30 PM	28	136	10	1	175	57	123	19	18	217	23	218	37	32	310	20	**173**	**18**	4	**215**	917
Total Volume	119	587	45	4	755	186	560	91	62	899	82	928	131	111	1252	104	602	45	23	774	3680
% App. Total	15.8	77.7	6	0.5		20.7	62.3	10.1	6.9		6.5	74.1	10.5	8.9		13.4	77.8	5.8	3		
PHF	.902	.889	.938	.500	.903	.775	.828	.784	.738	.806	.759	.951	.840	.771	.987	.743	.870	.625	.821	.900	.929

Counts Unlimited Inc.
25286 Jaclyn Avenue
Moreno Valley, CA 92557
951-485-7934

City of Rancho Cuamonga
N/S: Archibald Avenue
E/W: Arrow Highway
Weather: Sunny

File Name : RNCARARPM1
Site Code : 9150024
Start Date : 6/4/2009
Page No : 2

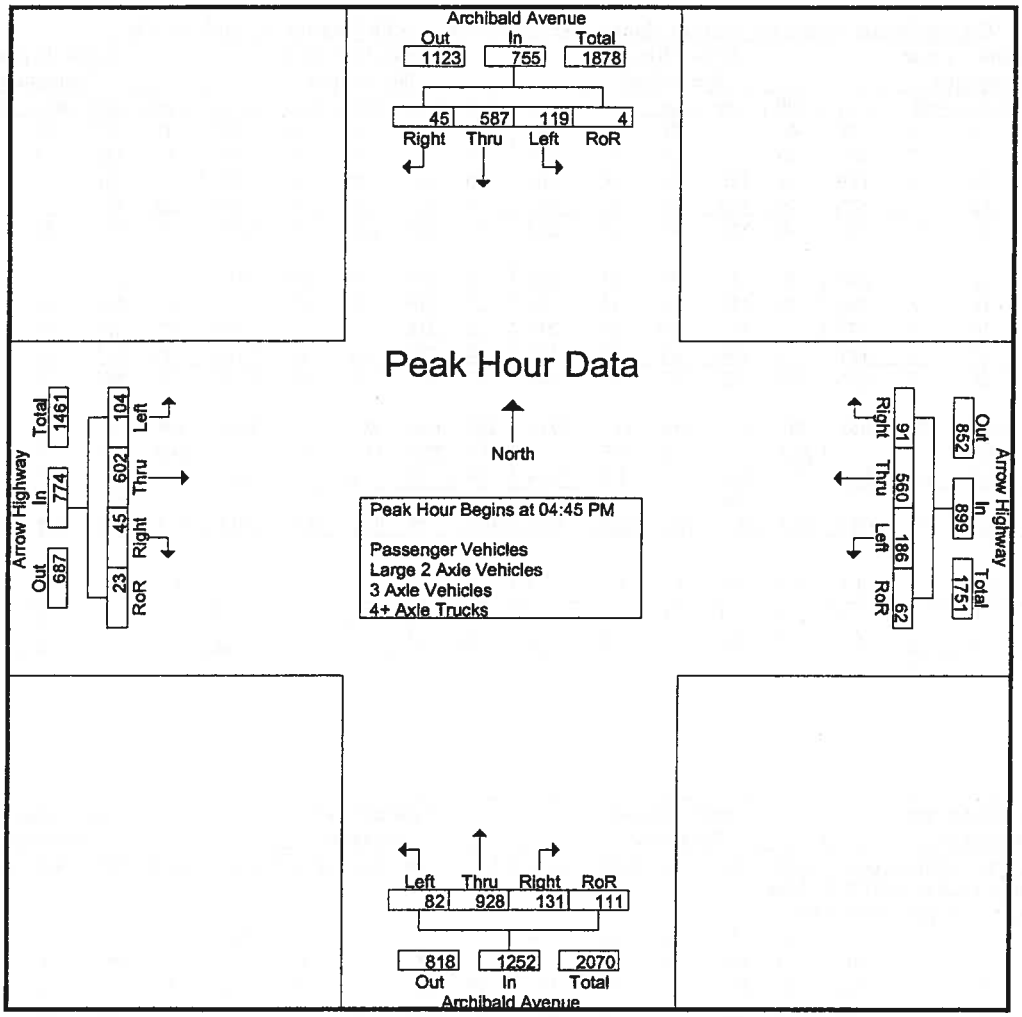

Peak Hour Analysis From 04:00 PM to 05:45 PM - Peak 1 of 1

Peak Hour for Each Approach Begins at:

	05:00 PM					04:15 PM					05:00 PM					04:45 PM				
+0 mins.	33	165	11	0	209	40	135	20	14	209	13	244	39	20	316	22	133	9	7	171
+15 mins.	29	152	12	2	195	45	122	26	16	209	27	239	28	23	317	27	148	6	5	186
+30 mins.	28	136	10	1	175	30	143	22	12	207	23	218	37	32	310	35	148	12	7	202
+45 mins.	31	135	19	2	187	60	169	29	21	279	24	226	37	24	311	20	173	18	4	215
Total Volume	121	588	52	5	766	175	569	97	63	904	87	927	141	99	1254	104	602	45	23	774
% App. Total	15.8	76.8	6.8	0.7		19.4	62.9	10.7	7		6.9	73.9	11.2	7.9		13.4	77.8	5.8	3	
PHF	.917	.891	.684	.625	.916	.729	.842	.836	.750	.810	.806	.950	.904	.773	.989	.743	.870	.625	.821	.900

Counts Unlimited Inc.
25286 Jaclyn Avenue
Moreno Valley, CA 92557
951-485-7934

City of Rancho Cuamonga
N/S: Archibald Avenue
E/W: Arrow Highway
Weather: Sunny

File Name : RNCARARPM1
Site Code : 9150024
Start Date : 6/4/2009
Page No : 1

Groups Printed- Passenger Vehicles

	Archibald Avenue Southbound					Arrow Highway Westbound					Archibald Avenue Northbound					Arrow Highway Eastbound					
Start Time	Left	Thru	Right	RoR	App. Total	Left	Thru	Right	RoR	App. Total	Left	Thru	Right	RoR	App. Total	Left	Thru	Right	RoR	App. Total	Int. Total
04:00 PM	20	138	5	3	166	43	127	26	12	208	20	190	39	25	274	27	115	14	4	160	808
04:15 PM	34	127	8	7	176	40	131	19	14	204	17	211	35	30	293	17	127	3	5	152	825
04:30 PM	28	114	10	4	156	41	120	26	16	203	23	196	37	31	287	21	136	7	6	170	816
04:45 PM	28	131	11	1	171	30	140	22	12	204	19	225	26	36	306	22	133	8	7	170	851
Total	110	510	34	15	669	154	518	93	54	819	79	822	137	122	1160	87	511	32	22	652	3300
05:00 PM	33	163	11	0	207	59	168	29	21	277	12	242	39	18	311	27	145	6	5	183	978
05:15 PM	29	151	12	2	194	38	122	20	10	190	27	239	28	23	317	35	147	12	7	201	902
05:30 PM	28	136	10	1	175	55	122	19	17	213	23	216	36	32	307	19	170	18	4	211	906
05:45 PM	30	130	18	2	180	51	103	22	13	189	24	225	37	24	310	36	114	14	3	167	846
Total	120	580	51	5	756	203	515	90	61	869	86	922	140	97	1245	117	576	50	19	762	3632
Grand Total	230	1090	85	20	1425	357	1033	183	115	1688	165	1744	277	219	2405	204	1087	82	41	1414	6932
Apprch %	16.1	76.5	6	1.4		21.1	61.2	10.8	6.8		6.9	72.5	11.5	9.1		14.4	76.9	5.8	2.9		
Total %	3.3	15.7	1.2	0.3	20.6	5.2	14.9	2.6	1.7	24.4	2.4	25.2	4	3.2	34.7	2.9	15.7	1.2	0.6	20.4	

	Archibald Avenue Southbound					Arrow Highway Westbound					Archibald Avenue Northbound					Arrow Highway Eastbound					
Start Time	Left	Thru	Right	RoR	App. Total		Thru	Right	RoR	App. Total		Thru	Right	RoR	App. Total		Thru	Right	RoR	App. Total	Int. Total
Peak Hour Analysis From 04:00 PM to 05:45 PM - Peak 1 of 1																					
Peak Hour for Entire Intersection Begins at 04:45 PM																					
04:45 PM	28	131	11	1	171	30	140	22	12	204	19	225	26	36	306	22	133	8	7	170	851
05:00 PM	33	163	11	0	207	59	168	29	21	277	12	242	39	18	311	27	145	6	5	183	978
05:15 PM	29	151	12	2	194	38	122	20	10	190	27	239	28	23	317	35	147	12	7	201	902
05:30 PM	28	136	10	1	175	55	122	19	17	213	23	216	36	32	307	19	170	18	4	211	906
Total Volume	118	581	44	4	747	182	552	90	60	884	81	922	129	109	1241	103	595	44	23	765	3637
% App. Total	15.8	77.8	5.9	0.5		20.6	62.4	10.2	6.8		6.5	74.3	10.4	8.8		13.5	77.8	5.8	3		
PHF	.894	.891	.917	.500	.902	.771	.821	.776	.714	.798	.750	.952	.827	.757	.979	.736	.875	.611	.821	.906	.930

Counts Unlimited Inc.
25286 Jaclyn Avenue
Moreno Valley, CA 92557
951-485-7934

City of Rancho Cuamonga
N/S: Archibald Avenue
E/W: Arrow Highway
Weather: Sunny

File Name : RNCARARPM1
Site Code : 9150024
Start Date : 6/4/2009
Page No : 2

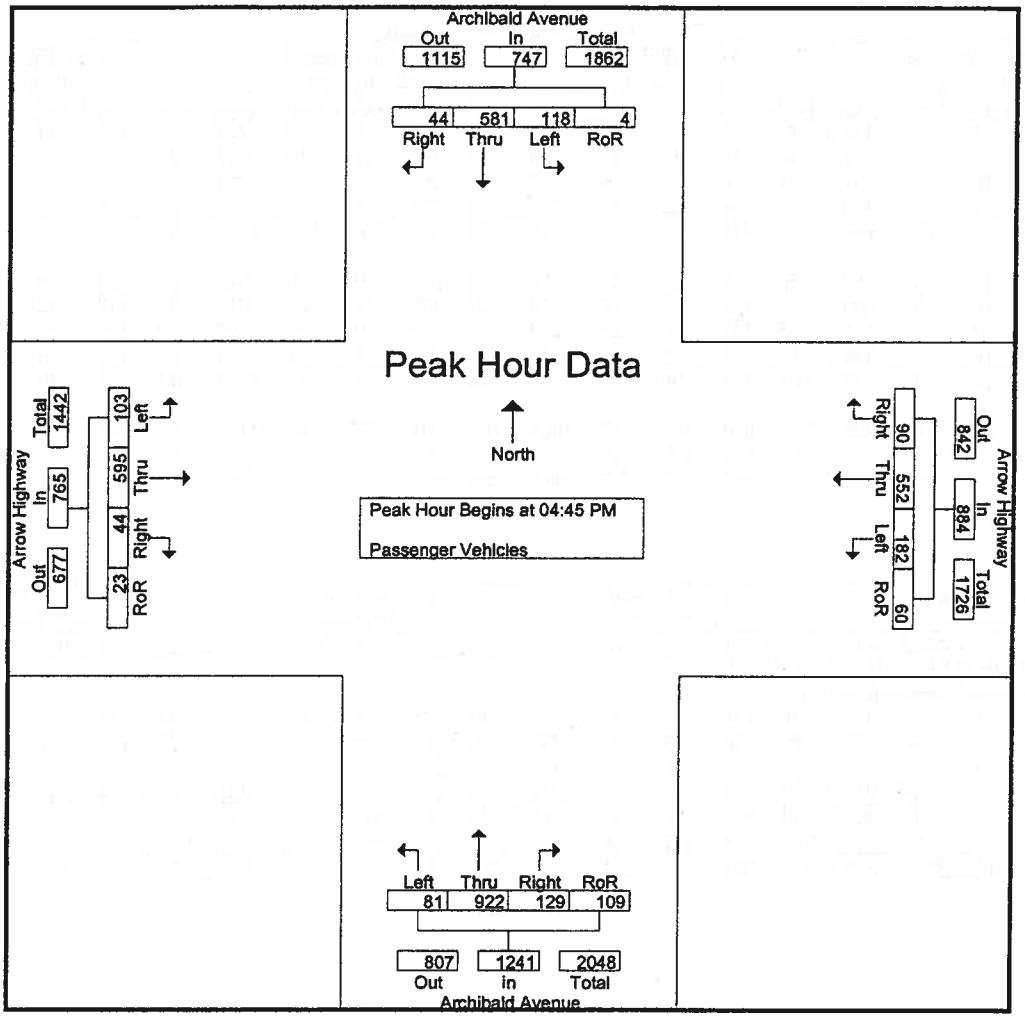

Peak Hour Analysis From 04:00 PM to 05:45 PM - Peak 1 of 1

Peak Hour for Each Approach Begins at:

	05:00 PM					04:15 PM					05:00 PM					04:45 PM				
+0 mins.	**33**	**163**	11	0	**207**	40	131	19	14	204	12	**242**	**39**	18	311	22	133	8	7	170
+15 mins.	29	151	12	**2**	194	41	120	26	16	203	**27**	239	28	23	**317**	27	145	6	5	183
+30 mins.	28	136	10	1	175	30	140	22	12	204	23	216	36	**32**	307	**35**	147	12	7	201
+45 mins.	30	130	**18**	2	180	**59**	**168**	**29**	**21**	**277**	24	225	37	24	310	19	**170**	**18**	4	**211**
Total Volume	120	580	51	5	756	170	559	96	63	888	86	922	140	97	1245	103	595	44	23	765
% App. Total	15.9	76.7	6.7	0.7		19.1	63	10.8	7.1		6.9	74.1	11.2	7.8		13.5	77.8	5.8	3	
PHF	.909	.890	.708	.625	.913	.720	.832	.828	.750	.801	.796	.952	.897	.758	.982	.736	.875	.611	.821	.906

Counts Unlimited Inc.
25286 Jaclyn Avenue
Moreno Valley, CA 92557
951-485-7934

City of Rancho Cuamonga
N/S: Archibald Avenue
E/W: Arrow Highway
Weather: Sunny

File Name : RNCARARPM1
Site Code : 9150024
Start Date : 6/4/2009
Page No : 1

Groups Printed- Large 2 Axle Vehicles

	Archibald Avenue Southbound					Arrow Highway Westbound					Archibald Avenue Northbound					Arrow Highway Eastbound					
Start Time	Left	Thru	Right	RoR	App. Total	Left	Thru	Right	RoR	App. Total	Left	Thru	Right	RoR	App. Total	Left	Thru	Right	RoR	App. Total	Int. Total
04:00 PM	1	4	0	0	5	1	0	0	0	1	0	3	2	1	6	1	1	1	0	3	15
04:15 PM	0	3	1	0	4	0	3	1	0	4	0	2	1	0	3	2	1	0	0	3	14
04:30 PM	0	2	0	0	2	2	1	0	0	3	2	3	0	1	6	0	1	1	0	2	13
04:45 PM	1	2	1	0	4	0	1	0	0	1	0	2	1	0	3	0	0	1	0	1	9
Total	2	11	2	0	15	3	5	1	0	9	2	10	4	2	18	3	3	3	0	9	51
05:00 PM	0	1	0	0	1	1	1	0	0	2	1	2	0	1	4	0	1	0	0	1	8
05:15 PM	0	1	0	0	1	0	0	1	1	2	0	0	0	0	0	0	1	0	0	1	4
05:30 PM	0	0	0	0	0	2	1	0	1	4	0	1	1	0	2	1	1	0	0	2	8
05:45 PM	1	4	1	0	6	1	1	0	0	2	0	1	0	0	1	0	0	0	0	0	9
Total	1	6	1	0	8	4	3	1	2	10	1	4	1	1	7	1	3	0	0	4	29
Grand Total	3	17	3	0	23	7	8	2	2	19	3	14	5	3	25	4	6	3	0	13	80
Apprch %	13	73.9	13	0		36.8	42.1	10.5	10.5		12	56	20	12		30.8	46.2	23.1	0		
Total %	3.8	21.2	3.8	0	28.8	8.8	10	2.5	2.5	23.8	3.8	17.5	6.2	3.8	31.2	5	7.5	3.8	0	16.2	

	Archibald Avenue Southbound					Arrow Highway Westbound					Archibald Avenue Northbound					Arrow Highway Eastbound					
Start Time	Left	Thru	Right	RoR	App. Total		Thru	Right	RoR	App. Total		Thru	Right	RoR	App. Total		Thru	Right	RoR	App. Total	Int. Total
Peak Hour Analysis From 04:45 PM to 05:30 PM - Peak 1 of 1																					
Peak Hour for Entire Intersection Begins at 04:45 PM																					
04:45 PM	1	2	1	0	4	0	1	0	0	1	0	2	1	0	3	0	0	1	0	1	9
05:00 PM	0	1	0	0	1	1	1	0	0	2	1	2	0	1	4	0	1	0	0	1	8
05:15 PM	0	1	0	0	1	0	0	1	1	2	0	0	0	0	0	0	1	0	0	1	4
05:30 PM	0	0	0	0	0	2	1	0	1	4	0	1	1	0	2	1	1	0	0	2	8
Total Volume	1	4	1	0	6	3	3	1	2	9	1	5	2	1	9	1	3	1	0	5	29
% App. Total	16.7	66.7	16.7	0		33.3	33.3	11.1	22.2		11.1	55.6	22.2	11.1		20	60	20	0		
PHF	.250	.500	.250	.000	.375	.375	.750	.250	.500	.563	.250	.625	.500	.250	.563	.250	.750	.250	.000	.625	.806

Counts Unlimited Inc.
25286 Jaclyn Avenue
Moreno Valley, CA 92557
951-485-7934

City of Rancho Cuamonga
N/S: Archibald Avenue
E/W: Arrow Highway
Weather: Sunny

File Name : RNCARARPM1
Site Code : 9150024
Start Date : 6/4/2009
Page No : 2

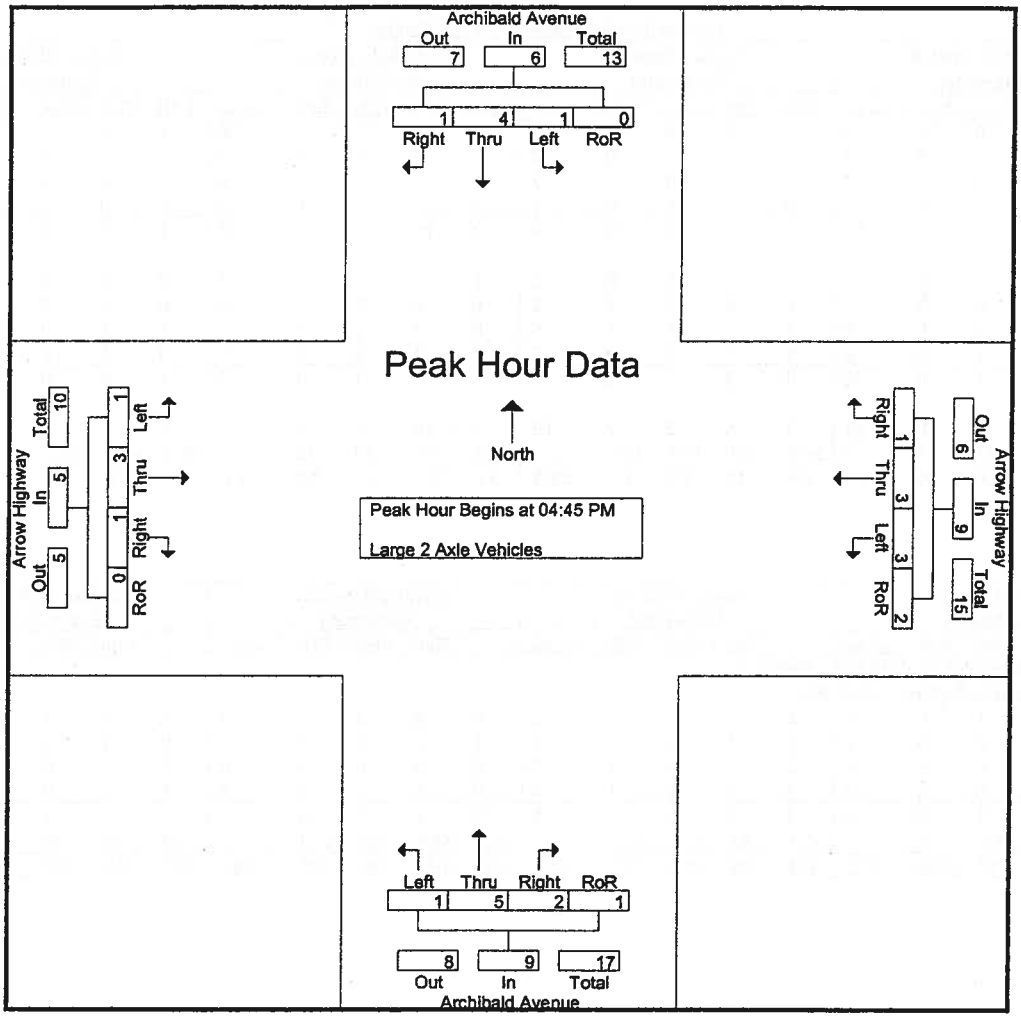

Peak Hour Analysis From 04:45 PM to 05:30 PM - Peak 1 of 1

Peak Hour for Each Approach Begins at:

	04:45 PM					04:45 PM					04:45 PM					04:45 PM				
+0 mins.	1	2	1	0	4	0	1	0	0	1	0	2	1	0	3	0	0	1	0	1
+15 mins.	0	1	0	0	1	1	1	0	0	2	1	2	0	1	4	0	1	0	0	1
+30 mins.	0	1	0	0	1	0	0	1	1	2	0	0	0	0	0	0	1	0	0	1
+45 mins.	0	0	0	0	0	2	1	0	1	4	0	1	1	0	2	1	1	0	0	2
Total Volume	1	4	1	0	6	3	3	1	2	9	1	5	2	1	9	1	3	1	0	5
% App. Total	16.7	66.7	16.7	0		33.3	33.3	11.1	22.2		11.1	55.6	22.2	11.1		20	60	20	0	
PHF	.250	.500	.250	.000	.375	.375	.750	.250	.500	.563	.250	.625	.500	.250	.563	.250	.750	.250	.000	.625

Counts Unlimited Inc.
25286 Jaclyn Avenue
Moreno Valley, CA 92557
951-485-7934

City of Rancho Cuamonga
N/S: Archibald Avenue
E/W: Arrow Highway
Weather: Sunny

File Name : RNCARARPM1
Site Code : 9150024
Start Date : 6/4/2009
Page No : 1

Groups Printed- 3 Axle Vehicles

	Archibald Avenue Southbound					Arrow Highway Westbound					Archibald Avenue Northbound					Arrow Highway Eastbound					
Start Time	Left	Thru	Right	RoR	App. Total	Left	Thru	Right	RoR	App. Total	Left	Thru	Right	RoR	App. Total	Left	Thru	Right	RoR	App. Total	Int. Total
04:00 PM	0	0	0	0	0	0	0	0	0	0	0	0	0	0	0	0	4	0	0	4	4
04:15 PM	0	0	0	0	0	0	0	0	0	0	0	1	0	0	1	0	1	0	0	1	2
04:30 PM	0	0	0	0	0	0	0	0	0	0	0	1	0	0	1	0	5	0	0	5	6
04:45 PM	0	1	0	0	1	0	0	0	0	0	0	0	0	0	0	0	0	0	0	0	1
Total	0	1	0	0	1	0	0	0	0	0	0	2	0	0	2	0	10	0	0	10	13
05:00 PM	0	0	0	0	0	0	0	0	0	0	0	0	0	1	1	0	1	0	0	1	2
05:15 PM	0	0	0	0	0	0	1	0	0	1	0	0	0	0	0	0	0	0	0	0	1
05:30 PM	0	0	0	0	0	0	0	0	0	0	0	1	0	0	1	0	0	0	0	0	1
05:45 PM	0	1	0	0	1	0	0	0	0	0	0	0	0	0	0	0	1	0	0	1	2
Total	0	1	0	0	1	0	1	0	0	1	0	1	0	1	2	0	2	0	0	2	6
Grand Total	0	2	0	0	2	0	1	0	0	1	0	3	0	1	4	0	12	0	0	12	19
Apprch %	0	100	0	0		0	100	0	0		0	75	0	25		0	100	0	0		
Total %	0	10.5	0	0	10.5	0	5.3	0	0	5.3	0	15.8	0	5.3	21.1	0	63.2	0	0	63.2	

	Archibald Avenue Southbound					Arrow Highway Westbound					Archibald Avenue Northbound					Arrow Highway Eastbound					
Start Time	Left	Thru	Right	RoR	App. Total		Thru	Right	RoR	App. Total		Thru	Right	RoR	App. Total		Thru	Right	RoR	App. Total	Int. Total
Peak Hour Analysis From 04:45 PM to 05:30 PM - Peak 1 of 1																					
Peak Hour for Entire Intersection Begins at 04:45 PM																					
04:45 PM	0	1	0	0	1	0	0	0	0	0	0	0	0	0	0	0	0	0	0	0	1
05:00 PM	0	0	0	0	0	0	0	0	0	0	0	0	0	1	1	0	1	0	0	1	2
05:15 PM	0	0	0	0	0	0	1	0	0	1	0	0	0	0	0	0	0	0	0	0	1
05:30 PM	0	0	0	0	0	0	0	0	0	0	0	1	0	0	1	0	0	0	0	0	1
Total Volume	0	1	0	0	1	0	1	0	0	1	0	1	0	1	2	0	1	0	0	1	5
% App. Total	0	100	0	0		0	100	0	0		0	50	0	50		0	100	0	0		
PHF	.000	.250	.000	.000	.250	.000	.250	.000	.000	.250	.000	.250	.000	.250	.500	.000	.250	.000	.000	.250	.625

Counts Unlimited Inc.
25286 Jaclyn Avenue
Moreno Valley, CA 92557
951-485-7934

City of Rancho Cuamonga
N/S: Archibald Avenue
E/W: Arrow Highway
Weather: Sunny

File Name : RNCARARPM1
Site Code : 9150024
Start Date : 6/4/2009
Page No : 2

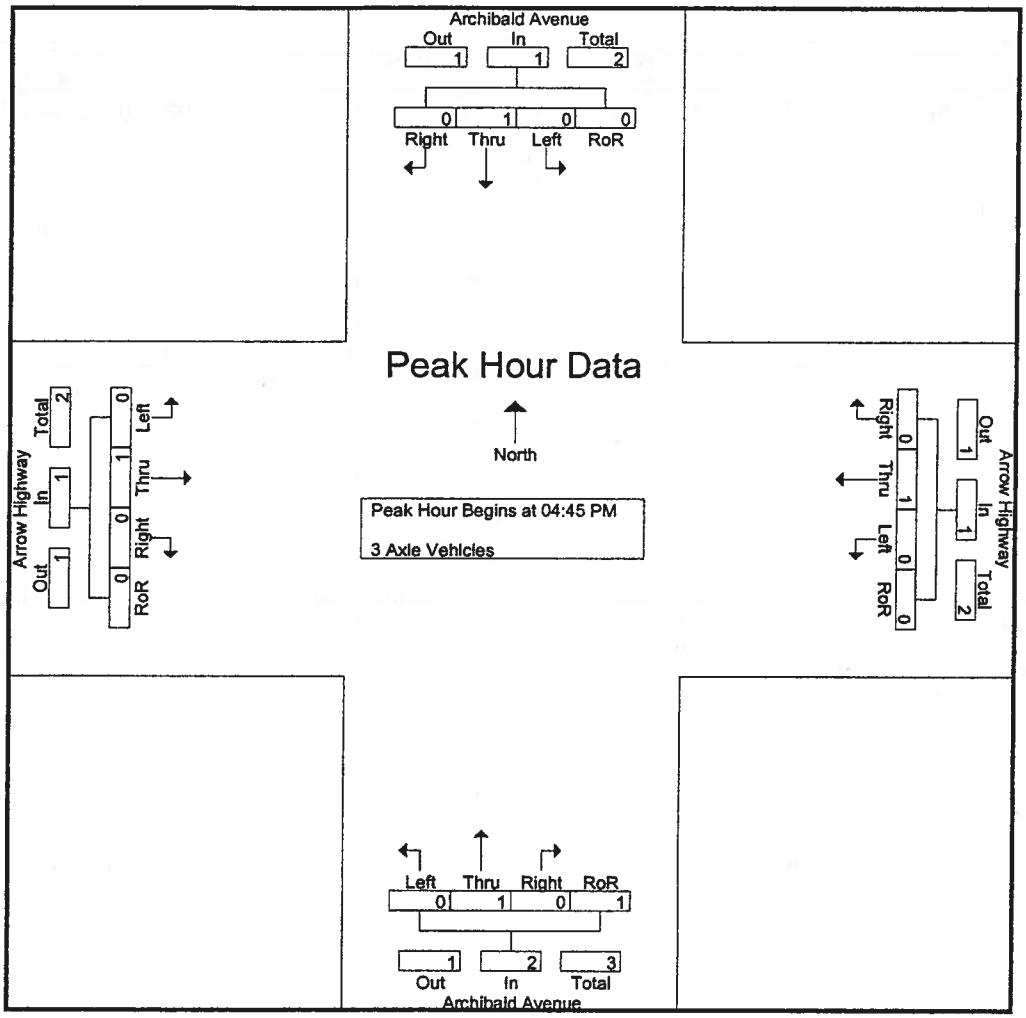

Peak Hour Analysis From 04:45 PM to 05:30 PM - Peak 1 of 1

Peak Hour for Each Approach Begins at:

	04:45 PM					04:45 PM					04:45 PM					04:45 PM				
+0 mins.	0	1	0	0	1	0	0	0	0	0	0	0	0	0	0	0	0	0	0	0
+15 mins.	0	0	0	0	0	0	0	0	0	0	0	0	0	1	1	0	1	0	0	1
+30 mins.	0	0	0	0	0	0	1	0	0	1	0	0	0	0	0	0	0	0	0	0
+45 mins.	0	0	0	0	0	0	0	0	0	0	0	1	0	0	1	0	0	0	0	0
Total Volume	0	1	0	0	1	0	1	0	0	1	0	1	0	1	2	0	1	0	0	1
% App. Total	0	100	0	0		0	100	0	0		0	50	0	50		0	100	0	0	
PHF	.000	.250	.000	.000	.250	.000	.250	.000	.000	.250	.000	.250	.000	.250	.500	.000	.250	.000	.000	.250

Counts Unlimited Inc.
25286 Jaclyn Avenue
Moreno Valley, CA 92557
951-485-7934

City of Rancho Cuamonga
N/S: Archibald Avenue
E/W: Arrow Highway
Weather: Sunny

File Name : RNCARARPM1
Site Code : 9150024
Start Date : 6/4/2009
Page No : 1

Groups Printed- 4+ Axle Trucks

	Archibald Avenue Southbound					Arrow Highway Westbound					Archibald Avenue Northbound					Arrow Highway Eastbound					
Start Time	Left	Thru	Right	RoR	App. Total	Left	Thru	Right	RoR	App. Total	Left	Thru	Right	RoR	App. Total	Left	Thru	Right	RoR	App. Total	Int. Total
04:00 PM	0	0	0	0	0	0	0	0	0	0	0	0	0	0	0	0	0	0	0	0	0
04:15 PM	0	0	0	0	0	0	1	0	0	1	0	0	0	0	0	0	0	0	0	0	1
04:30 PM	0	1	0	0	1	2	1	0	0	3	0	0	1	0	1	0	1	0	0	1	6
04:45 PM	0	0	0	0	0	0	2	0	0	2	0	0	0	0	0	0	0	0	0	0	2
Total	0	1	0	0	1	2	4	0	0	6	0	0	1	0	1	0	1	0	0	1	9
05:00 PM	0	1	0	0	1	0	0	0	0	0	0	0	0	0	0	0	1	0	0	1	2
05:15 PM	0	0	0	0	0	1	2	0	0	3	0	0	0	0	0	0	0	0	0	0	3
05:30 PM	0	0	0	0	0	0	0	0	0	0	0	0	0	0	0	0	2	0	0	2	2
05:45 PM	0	0	0	0	0	0	0	1	0	1	0	0	0	0	0	0	0	0	0	0	1
Total	0	1	0	0	1	1	2	1	0	4	0	0	0	0	0	0	3	0	0	3	8
Grand Total	0	2	0	0	2	3	6	1	0	10	0	0	1	0	1	0	4	0	0	4	17
Apprch %	0	100	0	0		30	60	10	0		0	0	100	0		0	100	0	0		
Total %	0	11.8	0	0	11.8	17.6	35.3	5.9	0	58.8	0	0	5.9	0	5.9	0	23.5	0	0	23.5	

	Archibald Avenue Southbound					Arrow Highway Westbound					Archibald Avenue Northbound					Arrow Highway Eastbound					
Start Time	Left	Thru	Right	RoR	App. Total		Thru	Right	RoR	App. Total		Thru	Right	RoR	App. Total		Thru	Right	RoR	App. Total	Int. Total
Peak Hour Analysis From 04:45 PM to 05:30 PM - Peak 1 of 1																					
Peak Hour for Entire Intersection Begins at 04:45 PM																					
04:45 PM	0	0	0	0	0	0	2	0	0	2	0	0	0	0	0	0	0	0	0	0	2
05:00 PM	0	1	0	0	1	0	0	0	0	0	0	0	0	0	0	0	1	0	0	1	2
05:15 PM	0	0	0	0	0	1	2	0	0	3	0	0	0	0	0	0	0	0	0	0	3
05:30 PM	0	0	0	0	0	0	0	0	0	0	0	0	0	0	0	0	2	0	0	2	2
Total Volume	0	1	0	0	1	1	4	0	0	5	0	0	0	0	0	0	3	0	0	3	9
% App. Total	0	100	0	0		20	80	0	0		0	0	0	0		0	100	0	0		
PHF	.000	.250	.000	.000	.250	.250	.500	.000	.000	.417	.000	.000	.000	.000	.000	.000	.375	.000	.000	.375	.750

Counts Unlimited Inc.
25286 Jaclyn Avenue
Moreno Valley, CA 92557
951-485-7934

City of Rancho Cuamonga
N/S: Archibald Avenue
E/W: Arrow Highway
Weather: Sunny

File Name : RNCARARPM1
Site Code : 9150024
Start Date : 6/4/2009
Page No : 2

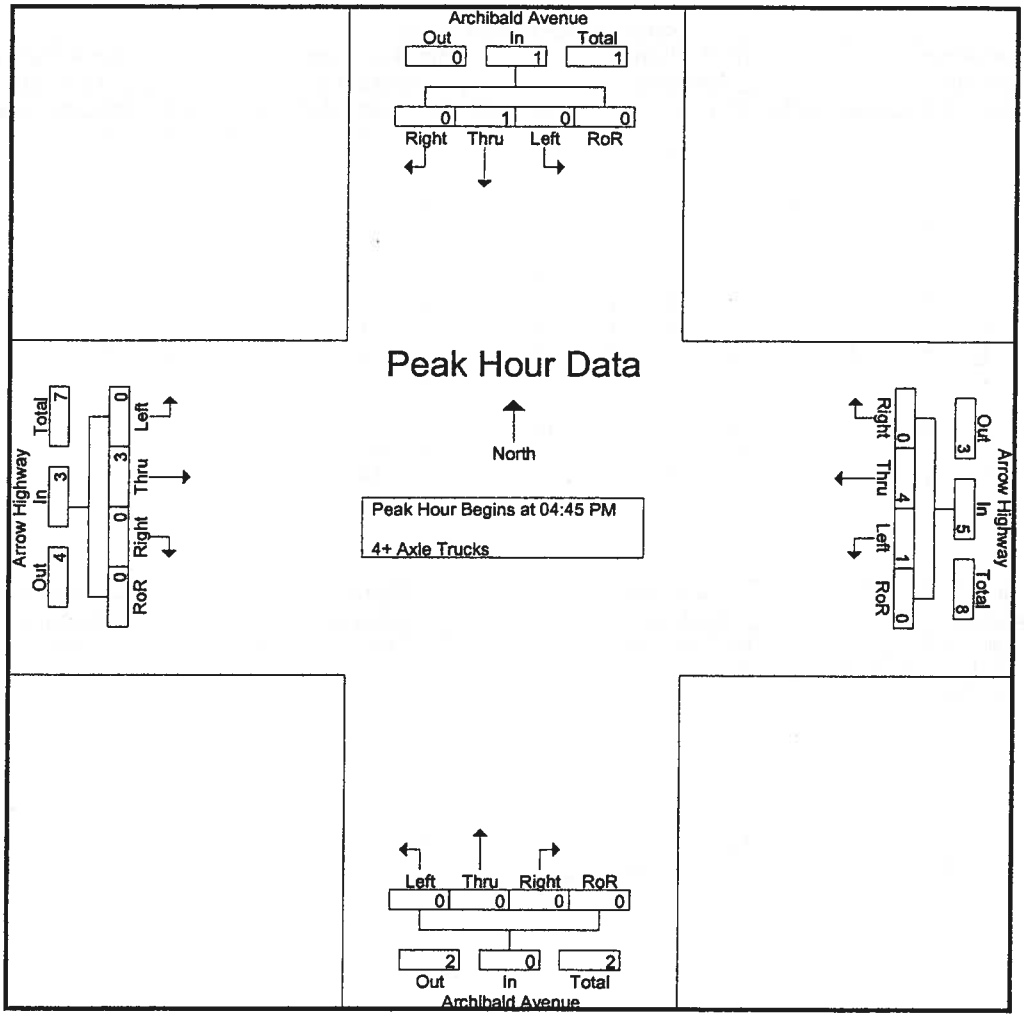

Peak Hour Analysis From 04:45 PM to 05:30 PM - Peak 1 of 1

Peak Hour for Each Approach Begins at:

	04:45 PM					04:45 PM					04:45 PM					04:45 PM				
+0 mins.	0	0	0	0	0	0	2	0	0	2	0	0	0	0	0	0	0	0	0	0
+15 mins.	0	1	0	0	1	0	0	0	0	0	0	0	0	0	0	0	1	0	0	1
+30 mins.	0	0	0	0	0	1	2	0	0	3	0	0	0	0	0	0	0	0	0	0
+45 mins.	0	0	0	0	0	0	0	0	0	0	0	0	0	0	0	0	2	0	0	2
Total Volume	0	1	0	0	1	1	4	0	0	5	0	0	0	0	0	0	3	0	0	3
% App. Total	0	100	0	0		20	80	0	0		0	0	0	0		0	100	0	0	
PHF	.000	.250	.000	.000	.250	.250	.500	.000	.000	.417	.000	.000	.000	.000	.000	.000	.375	.000	.000	.375

PASSENGER CAR EQUIVALENCY PEAK HOUR COUNT SUMMARY

INTERSECTION 11
Archibald Avenue (NS) / 4th Street (EW)

AM PEAK HOUR

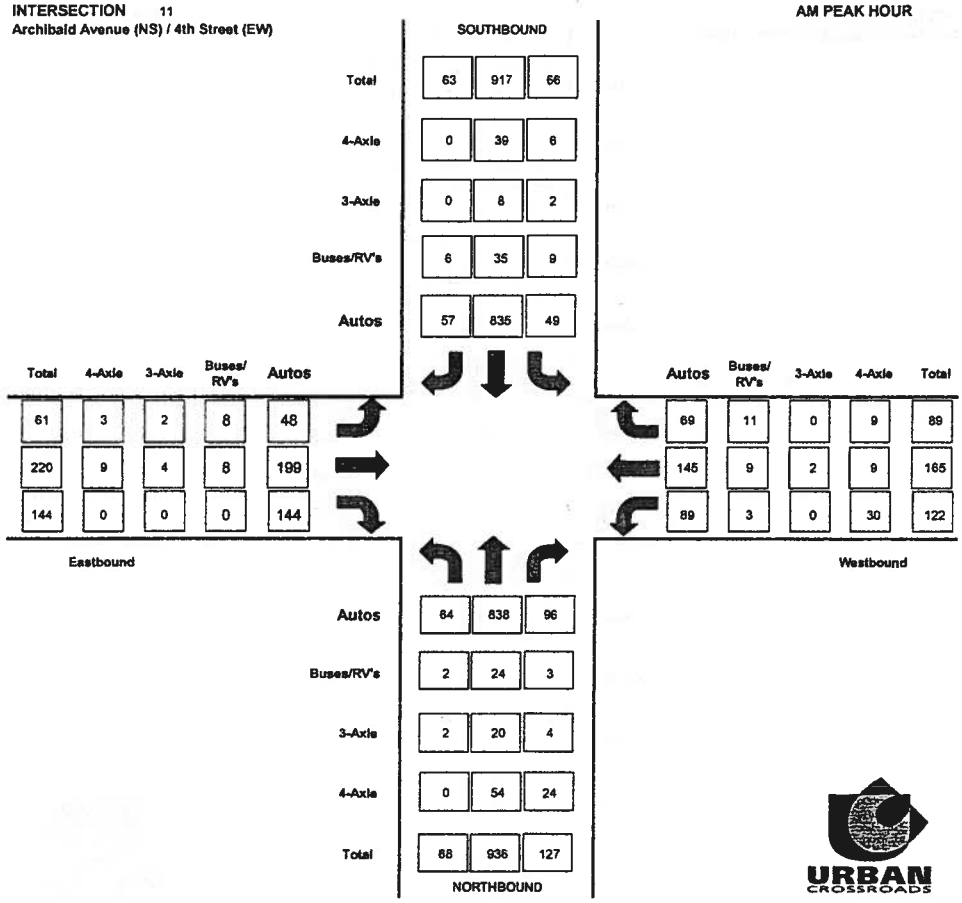

INTERSECTION 11
Archibald Avenue (NS) / 4th Street (EW)

PM PEAK HOUR

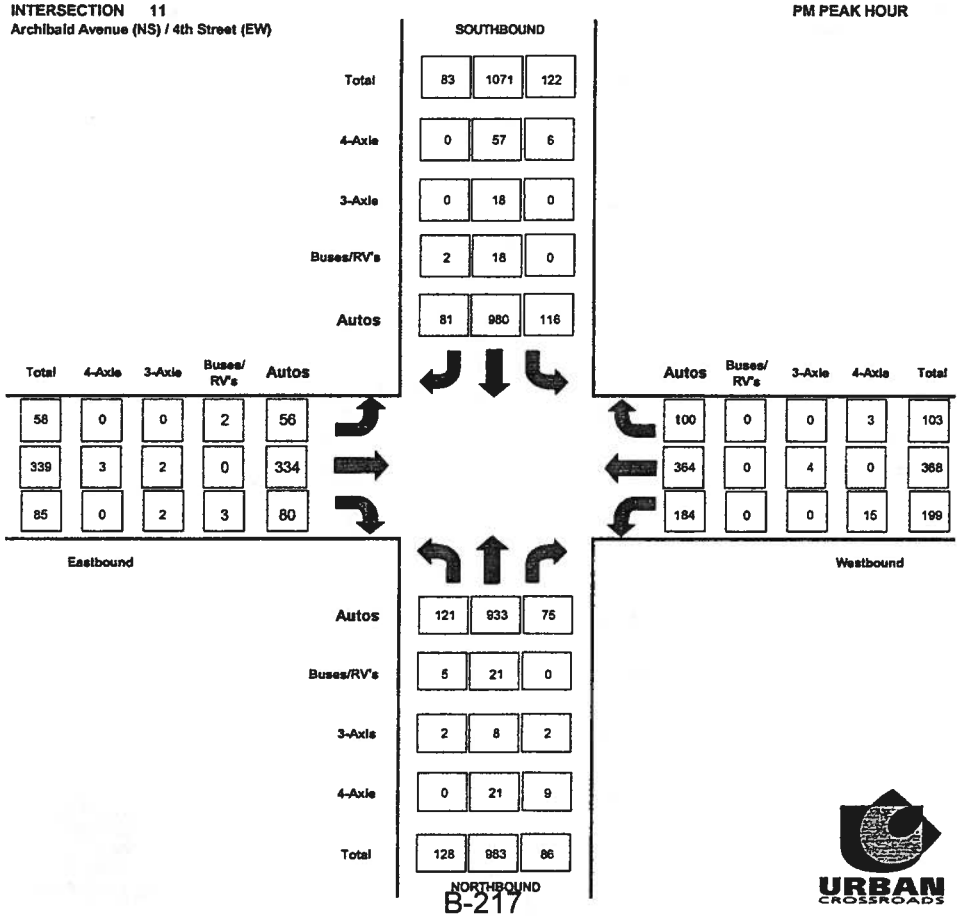

RAW PEAK HOUR COUNT SUMMARY

INTERSECTION 11
Archibald Avenue (NS) / 4th Street (EW)

AM PEAK HOUR

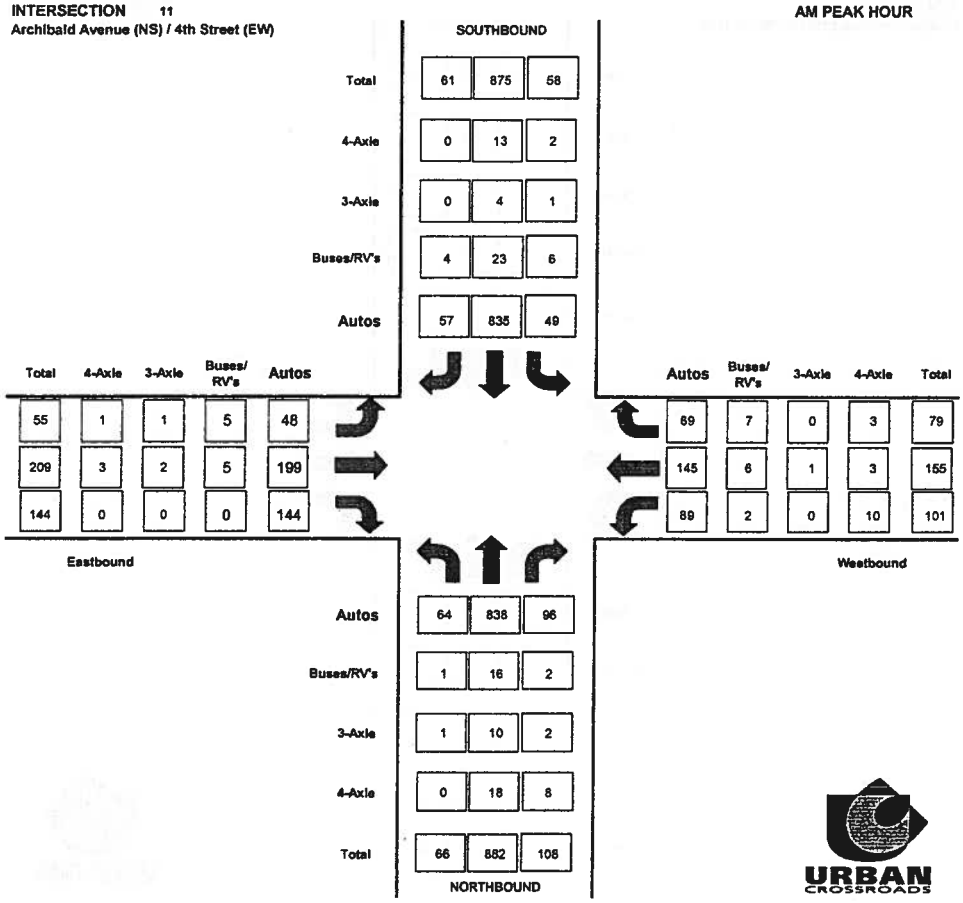

INTERSECTION 11
Archibald Avenue (NS) / 4th Street (EW)

PM PEAK HOUR

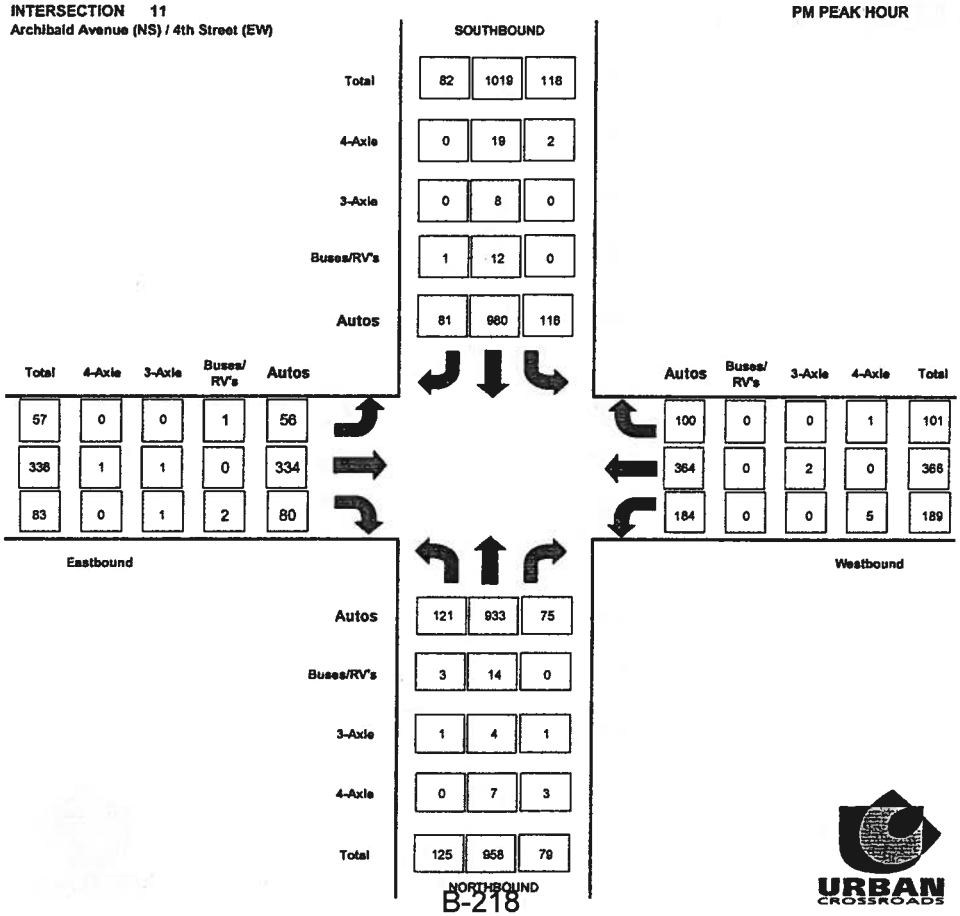

Counts Unlimited Inc.
25286 Jaclyn Avenue
Moreno Valley, CA 92557
951-485-7934

11

City of Rancho Cucamonga
N/S: Archibald Avenue
E/W: 4th Street
Weather: Sunny

File Name : RNCAR4AM
Site Code : 9150063
Start Date : 5/28/2009
Page No : 1

Groups Printed- Passenger Vehicles - Large 2 Axle Vehicles - 3 Axle Vehicles - 4+ Axle Trucks

	Archibald Avenue Southbound					4th Street Westbound					Archibald Avenue Northbound					4th Street Eastbound					
Start Time	Left	Thru	Right	RoR	App. Total	Left	Thru	Right	RoR	App. Total	Left	Thru	Right	RoR	App. Total	Left	Thru	Right	RoR	App. Total	Int. Total
07:00 AM	14	215	7	3	239	28	29	8	5	70	13	168	16	3	200	8	36	20	14	78	587
07:15 AM	14	217	8	4	243	27	22	5	13	67	12	184	13	5	214	19	57	34	12	122	646
07:30 AM	17	261	7	11	296	19	32	3	14	68	16	206	23	3	248	9	45	35	6	95	707
07:45 AM	16	220	10	7	253	34	48	10	12	104	17	249	20	10	296	15	68	30	8	121	774
Total	61	913	32	25	1031	108	131	26	44	309	58	807	72	21	958	51	206	119	40	416	2714
08:00 AM	11	177	10	4	202	21	53	14	8	96	21	243	26	8	298	12	39	13	6	70	666
08:15 AM	13	175	5	10	203	29	37	7	5	78	15	158	11	4	188	9	46	13	9	77	546
08:30 AM	28	173	9	7	217	16	58	9	6	89	19	187	15	6	227	10	80	15	3	108	641
08:45 AM	17	175	6	14	212	13	49	15	7	84	15	203	12	5	235	9	65	10	10	94	625
Total	69	700	30	35	834	79	197	45	26	347	70	791	64	23	948	40	230	51	28	349	2478
Grand Total	130	1613	62	60	1865	187	328	71	70	656	128	1598	136	44	1906	91	436	170	68	765	5192
Apprch %	7	86.5	3.3	3.2		28.5	50	10.8	10.7		6.7	83.8	7.1	2.3		11.9	57	22.2	8.9		
Total %	2.5	31.1	1.2	1.2	35.9	3.6	6.3	1.4	1.3	12.6	2.5	30.8	2.6	0.8	36.7	1.8	8.4	3.3	1.3	14.7	
Passenger Vehicles		1520										1506									
% Passenger Vehicles	90	94.2	88.7	98.3	93.9	90.4	92.7	81.7	88.6	90.4	95.3	94.2	87.5	100	94	89	94.7	99.4	100	95.6	93.7
Large 2 Axle Vehicles																					
% Large 2 Axle Vehicles	5.4	3.4	9.7	1.7	3.7	1.6	4.3	11.3	7.1	4.6	1.6	2.9	2.2	0	2.7	5.5	3.4	0	0	2.6	3.3
3 Axle Vehicles																					
% 3 Axle Vehicles	0.8	0.6	0	0	0.5	0	1.2	1.4	0	0.8	3.1	1	1.5	0	1.2	4.4	0.7	0	0	0.9	0.8
4+ Axle Trucks	5	29	1	0	35	15	6	4	3	28	0	30	12	0	42	1	5	1	0	7	112
% 4+ Axle Trucks																					

	Archibald Avenue Southbound					4th Street Westbound					Archibald Avenue Northbound					4th Street Eastbound					
Start Time	Left	Thru	Right	RoR	App. Total	Left	Thru	Right	RoR	App. Total	Left	Thru	Right	RoR	App. Total	Left	Thru	Right	RoR	App. Total	Int. Total
Peak Hour Analysis From 07:15 AM to 08:00 AM - Peak 1 of 1																					
Peak Hour for Entire Intersection Begins at 07:15 AM																					
07:15 AM	14	217	8	4	243	27	22	5	13	67	12	184	13	5	214	**19**	57	34	**12**	**122**	646
07:30 AM	**17**	**261**	7	**11**	**296**	19	32	3	**14**	68	16	206	23	3	248	9	45	**35**	6	95	707
07:45 AM	16	220	**10**	7	253	**34**	48	10	12	**104**	17	**249**	20	**10**	296	15	**68**	30	8	121	774
08:00 AM	11	177	10	4	202	21	**53**	**14**	8	96	**21**	243	**26**	8	**298**	12	39	13	6	70	666
Total Volume	58	875	35	26	994	101	155	32	47	335	66	882	82	26	1056	55	209	112	32	408	2793
% App. Total	5.8	88	3.5	2.6		30.1	46.3	9.6	14		6.2	83.5	7.8	2.5		13.5	51.2	27.5	7.8		
PHF	.853	.838	.875	.591	.840	.743	.731	.571	.839	.805	.786	.886	.788	.650	.886	.724	.768	.800	.667	.836	.902

Counts Unlimited Inc.
25286 Jaclyn Avenue
Moreno Valley, CA 92557
951-485-7934

City of Rancho Cucamonga
N/S: Archibald Avenue
E/W: 4th Street
Weather: Sunny

File Name : RNCAR4AM
Site Code : 9150063
Start Date : 5/28/2009
Page No : 2

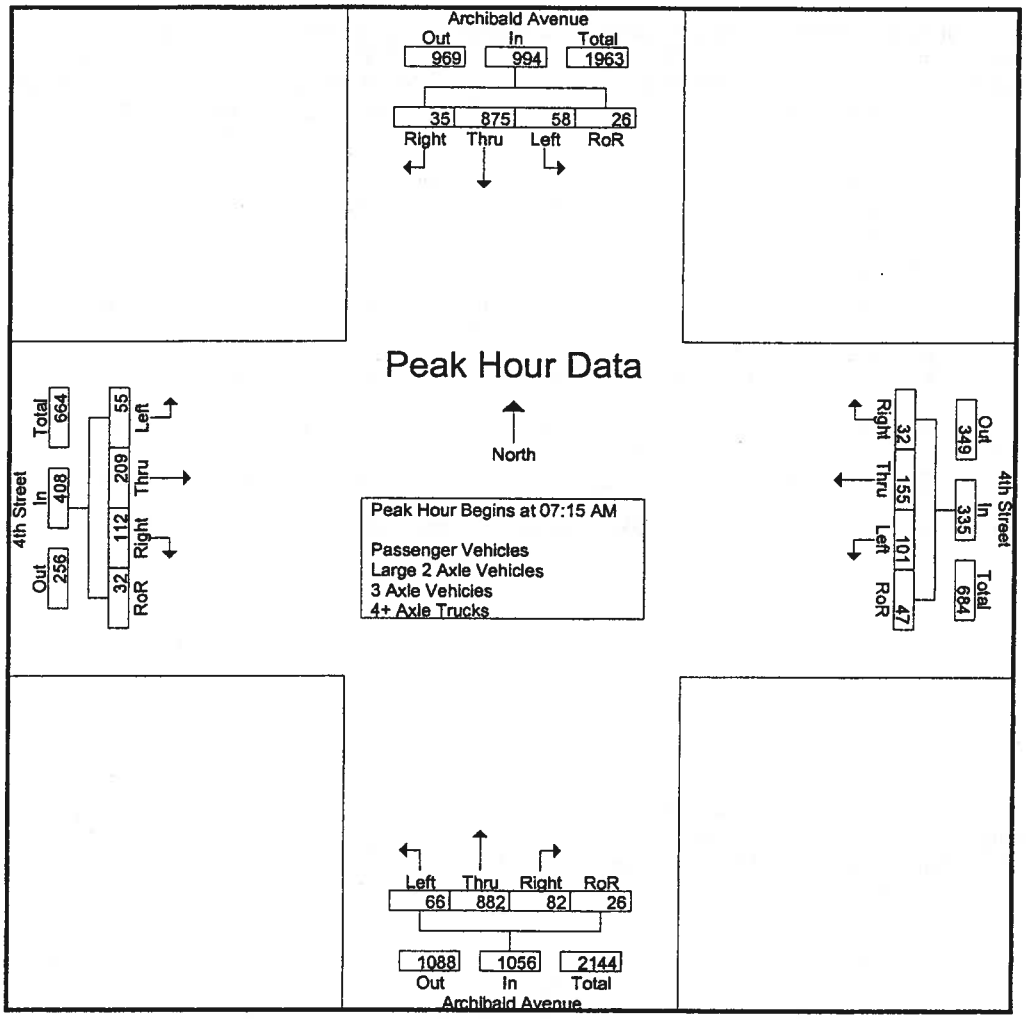

Peak Hour Analysis From 07:15 AM to 08:00 AM - Peak 1 of 1

Peak Hour for Each Approach Begins at:

	07:15 AM					07:15 AM					07:15 AM					07:15 AM				
+0 mins.	14	217	8	4	243	27	22	5	13	67	12	184	13	5	214	**19**	57	34	**12**	**122**
+15 mins.	**17**	**261**	7	**11**	**296**	19	32	3	**14**	68	16	206	23	3	248	9	45	**35**	6	95
+30 mins.	16	220	**10**	7	253	**34**	48	10	12	**104**	17	**249**	20	**10**	296	15	**68**	30	8	121
+45 mins.	11	177	10	4	202	21	**53**	**14**	8	96	**21**	243	**26**	8	**298**	12	39	13	6	70
Total Volume	58	875	35	26	994	101	155	32	47	335	66	882	82	26	1056	55	209	112	32	408
% App. Total	5.8	88	3.5	2.6		30.1	46.3	9.6	14		6.2	83.5	7.8	2.5		13.5	51.2	27.5	7.8	
PHF	.853	.838	.875	.591	.840	.743	.731	.571	.839	.805	.786	.886	.788	.650	.886	.724	.768	.800	.667	.836

Counts Unlimited Inc.
25286 Jaclyn Avenue
Moreno Valley, CA 92557
951-485-7934

City of Rancho Cucamonga
N/S: Archibald Avenue
E/W: 4th Street
Weather: Sunny

File Name : RNCAR4AM
Site Code : 9150063
Start Date : 5/28/2009
Page No : 1

Groups Printed- Passenger Vehicles

	Archibald Avenue Southbound					4th Street Westbound					Archibald Avenue Northbound					4th Street Eastbound					
Start Time	Left	Thru	Right	RoR	App. Total	Left	Thru	Right	RoR	App. Total	Left	Thru	Right	RoR	App. Total	Left	Thru	Right	RoR	App. Total	Int. Total
07:00 AM	13	200	7	3	223	24	26	8	5	63	12	158	14	3	187	7	34	19	14	74	547
07:15 AM	12	209	8	4	233	24	21	2	13	60	12	177	8	5	202	16	53	34	12	115	610
07:30 AM	14	247	7	11	279	18	31	3	14	66	16	189	19	3	227	8	43	35	6	92	664
07:45 AM	14	209	7	7	237	27	45	10	10	92	17	243	18	10	288	13	64	30	8	115	732
Total	53	865	29	25	972	93	123	23	42	281	57	767	59	21	904	44	194	118	40	396	2553
08:00 AM	9	170	9	4	192	20	48	10	7	85	19	229	25	8	281	11	39	13	6	69	627
08:15 AM	13	164	4	10	191	27	33	6	4	70	14	151	11	4	180	9	43	13	9	74	515
08:30 AM	27	161	7	6	201	16	53	6	3	78	18	169	12	6	205	9	75	15	3	102	586
08:45 AM	15	160	6	14	195	13	47	13	6	79	14	190	12	5	221	8	62	10	10	90	585
Total	64	655	26	34	779	76	181	35	20	312	65	739	60	23	887	37	219	51	28	335	2313
Grand Total	117	1520	55	59	1751	169	304	58	62	593	122	1506	119	44	1791	81	413	169	68	731	4866
Apprch %	6.7	86.8	3.1	3.4		28.5	51.3	9.8	10.5		6.8	84.1	6.6	2.5		11.1	56.5	23.1	9.3		
Total %	2.4	31.2	1.1	1.2	36	3.5	6.2	1.2	1.3	12.2	2.5	30.9	2.4	0.9	36.8	1.7	8.5	3.5	1.4	15	

	Archibald Avenue Southbound					4th Street Westbound					Archibald Avenue Northbound					4th Street Eastbound					
Start Time	Left	Thru	Right	RoR	App. Total		Thru	Right	RoR	App. Total		Thru	Right	RoR	App. Total		Thru	Right	RoR	App. Total	Int. Total
Peak Hour Analysis From 07:15 AM to 08:00 AM - Peak 1 of 1																					
Peak Hour for Entire Intersection Begins at 07:15 AM																					
07:15 AM	12	209	8	4	233	24	21	2	13	60	12	177	8	5	202	**16**	53	34	**12**	**115**	610
07:30 AM	**14**	**247**	7	**11**	**279**	18	31	3	**14**	66	16	189	19	3	227	8	43	**35**	6	92	664
07:45 AM	14	209	7	7	237	27	45	**10**	10	**92**	17	**243**	18	**10**	**288**	13	**64**	30	8	115	**732**
08:00 AM	9	170	**9**	4	192	20	**48**	10	7	85	**19**	229	**25**	8	281	11	39	13	6	69	627
Total Volume	49	835	31	26	941	89	145	25	44	303	64	838	70	26	998	48	199	112	32	391	2633
% App. Total	5.2	88.7	3.3	2.8		29.4	47.9	8.3	14.5		6.4	84	7	2.6		12.3	50.9	28.6	8.2		
PHF	.875	.845	.861	.591	.843	.824	.755	.625	.786	.823	.842	.862	.700	.650	.866	.750	.777	.800	.667	.850	.899

Counts Unlimited Inc.
25286 Jaclyn Avenue
Moreno Valley, CA 92557
951-485-7934

City of Rancho Cucamonga
N/S: Archibald Avenue
E/W: 4th Street
Weather: Sunny

File Name : RNCAR4AM
Site Code : 9150063
Start Date : 5/28/2009
Page No : 2

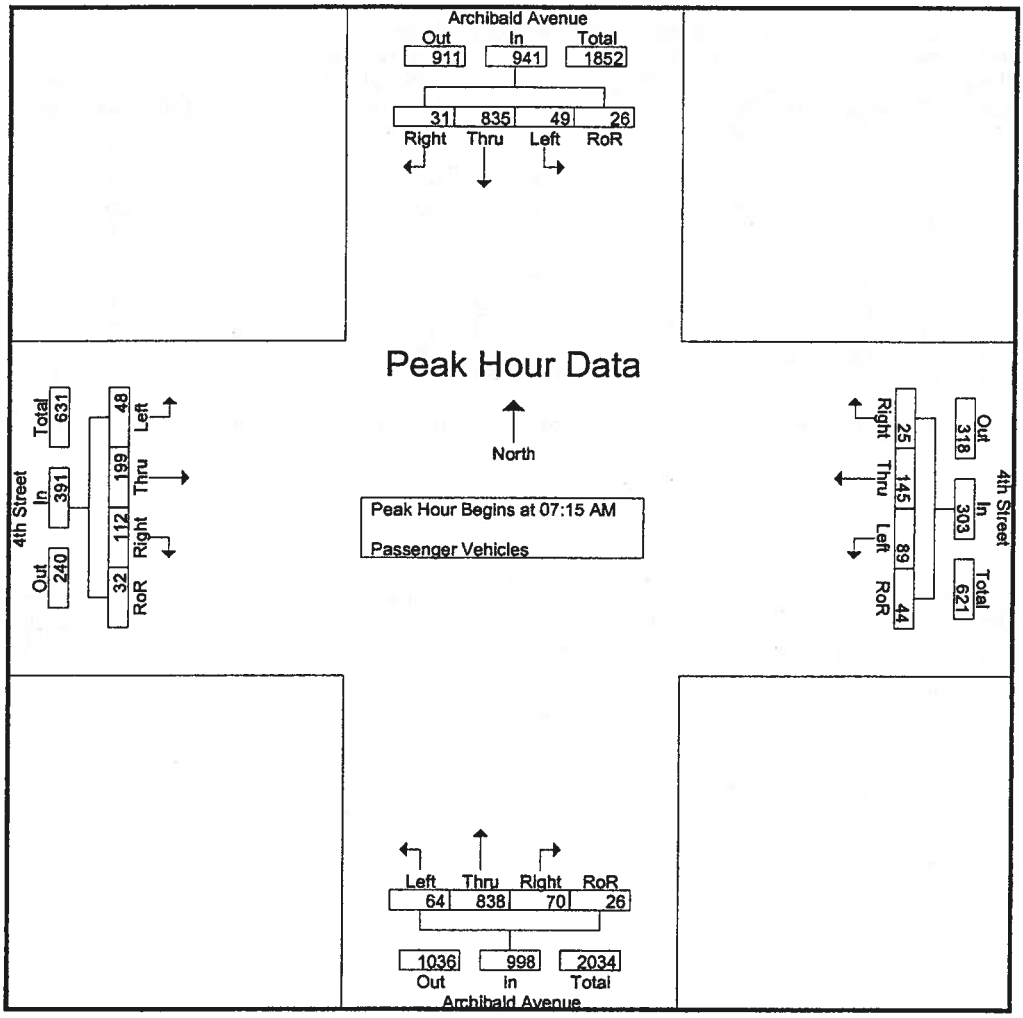

Peak Hour Analysis From 07:15 AM to 08:00 AM - Peak 1 of 1

Peak Hour for Each Approach Begins at:

	07:15 AM					07:15 AM					07:15 AM					07:15 AM				
+0 mins.	12	209	8	4	233	24	21	2	13	60	12	177	8	5	202	16	53	34	12	115
+15 mins.	14	247	7	11	279	18	31	3	14	66	16	189	19	3	227	8	43	35	6	92
+30 mins.	14	209	7	7	237	27	45	10	10	92	17	243	18	10	288	13	64	30	8	115
+45 mins.	9	170	9	4	192	20	48	10	7	85	19	229	25	8	281	11	39	13	6	69
Total Volume	49	835	31	26	941	89	145	25	44	303	64	838	70	26	998	48	199	112	32	391
% App. Total	5.2	88.7	3.3	2.8		29.4	47.9	8.3	14.5		6.4	84	7	2.6		12.3	50.9	28.6	8.2	
PHF	.875	.845	.861	.591	.843	.824	.755	.625	.786	.823	.842	.862	.700	.650	.866	.750	.777	.800	.667	.850

Counts Unlimited Inc.
25286 Jaclyn Avenue
Moreno Valley, CA 92557
951-485-7934

City of Rancho Cucamonga
N/S: Archibald Avenue
E/W: 4th Street
Weather: Sunny

File Name : RNCAR4AM
Site Code : 9150063
Start Date : 5/28/2009
Page No : 1

Groups Printed- 3 Axle Vehicles

	Archibald Avenue Southbound					4th Street Westbound					Archibald Avenue Northbound					4th Street Eastbound					
Start Time	Left	Thru	Right	RoR	App. Total	Left	Thru	Right	RoR	App. Total	Left	Thru	Right	RoR	App. Total	Left	Thru	Right	RoR	App. Total	Int. Total
07:00 AM	0	1	0	0	1	0	1	0	0	1	1	2	0	0	3	1	0	0	0	1	6
07:15 AM	1	0	0	0	1	0	0	0	0	0	0	0	1	0	1	0	2	0	0	2	4
07:30 AM	0	0	0	0	0	0	0	0	0	0	0	6	0	0	6	1	0	0	0	1	7
07:45 AM	0	3	0	0	3	0	0	0	0	0	0	0	1	0	1	0	0	0	0	0	4
Total	1	4	0	0	5	0	1	0	0	1	1	8	2	0	11	2	2	0	0	4	21
08:00 AM	0	1	0	0	1	0	1	0	0	1	1	4	0	0	5	0	0	0	0	0	7
08:15 AM	0	1	0	0	1	0	1	0	0	1	1	1	0	0	2	0	0	0	0	0	4
08:30 AM	0	1	0	0	1	0	0	0	0	0	0	1	0	0	1	1	0	0	0	1	3
08:45 AM	0	2	0	0	2	0	1	1	0	2	1	2	0	0	3	1	1	0	0	2	9
Total	0	5	0	0	5	0	3	1	0	4	3	8	0	0	11	2	1	0	0	3	23
Grand Total	1	9	0	0	10	0	4	1	0	5	4	16	2	0	22	4	3	0	0	7	44
Apprch %	10	90	0	0		0	80	20	0		18.2	72.7	9.1	0		57.1	42.9	0	0		
Total %	2.3	20.5	0	0	22.7	0	9.1	2.3	0	11.4	9.1	36.4	4.5	0	50	9.1	6.8	0	0	15.9	

	Archibald Avenue Southbound					4th Street Westbound					Archibald Avenue Northbound					4th Street Eastbound					
Start Time	Left	Thru	Right	RoR	App. Total		Thru	Right	RoR	App. Total		Thru	Right	RoR	App. Total		Thru	Right	RoR	App. Total	Int. Total
Peak Hour Analysis From 07:15 AM to 08:00 AM - Peak 1 of 1																					
Peak Hour for Entire Intersection Begins at 07:15 AM																					
07:15 AM	1	0	0	0	1	0	0	0	0	0	0	0	1	0	1	0	2	0	0	2	4
07:30 AM	0	0	0	0	0	0	0	0	0	0	0	6	0	0	6	1	0	0	0	1	7
07:45 AM	0	3	0	0	3	0	0	0	0	0	0	0	1	0	1	0	0	0	0	0	4
08:00 AM	0	1	0	0	1	0	1	0	0	1	1	4	0	0	5	0	0	0	0	0	7
Total Volume	1	4	0	0	5	0	1	0	0	1	1	10	2	0	13	1	2	0	0	3	22
% App. Total	20	80	0	0		0	100	0	0		7.7	76.9	15.4	0		33.3	66.7	0	0		
PHF	.250	.333	.000	.000	.417	.000	.250	.000	.000	.250	.250	.417	.500	.000	.542	.250	.250	.000	.000	.375	.786

Counts Unlimited Inc.
25286 Jaclyn Avenue
Moreno Valley, CA 92557
951-485-7934

City of Rancho Cucamonga
N/S: Archibald Avenue
E/W: 4th Street
Weather: Sunny

File Name : RNCAR4AM
Site Code : 9150063
Start Date : 5/28/2009

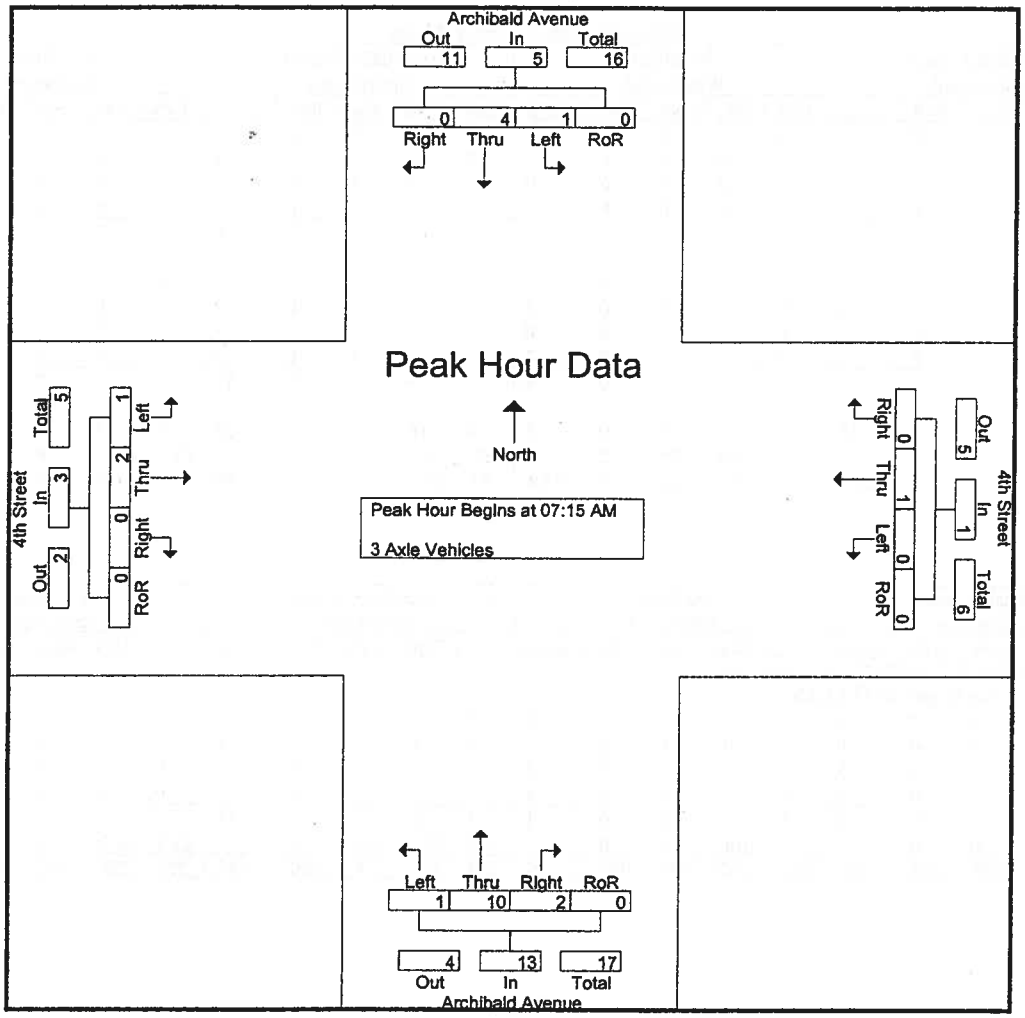

Peak Hour Analysis From 07:15 AM to 08:00 AM - Peak 1 of 1

Peak Hour for Each Approach Begins at:

	07:15 AM					07:15 AM					07:15 AM					07:15 AM				
+0 mins.	1	0	0	0	1	0	0	0	0	0	0	0	1	0	1	0	2	0	0	2
+15 mins.	0	0	0	0	0	0	0	0	0	0	0	6	0	0	6	1	0	0	0	1
+30 mins.	0	3	0	0	3	0	0	0	0	0	0	0	1	0	1	0	0	0	0	0
+45 mins.	0	1	0	0	1	0	1	0	0	1	1	4	0	0	5	0	0	0	0	0
Total Volume	1	4	0	0	5	0	1	0	0	1	1	10	2	0	13	1	2	0	0	3
% App. Total	20	80	0	0		0	100	0	0		7.7	76.9	15.4	0		33.3	66.7	0	0	
PHF	.250	.333	.000	.000	.417	.000	.250	.000	.000	.250	.250	.417	.500	.000	.542	.250	.250	.000	.000	.375

Counts Unlimited Inc.
25286 Jaclyn Avenue
Moreno Valley, CA 92557
951-485-7934

City of Rancho Cucamonga
N/S: Archibald Avenue
E/W: 4th Street
Weather: Sunny

File Name : RNCAR4AM
Site Code : 9150063
Start Date : 5/28/2009
Page No : 1

Groups Printed- Large 2 Axle Vehicles

	Archibald Avenue Southbound					4th Street Westbound					Archibald Avenue Northbound					4th Street Eastbound					
Start Time	Left	Thru	Right	RoR	App. Total	Left	Thru	Right	RoR	App. Total	Left	Thru	Right	RoR	App. Total	Left	Thru	Right	RoR	App. Total	Int. Total
07:00 AM	1	10	0	0	11	0	1	0	0	1	0	4	0	0	4	0	1	0	0	1	17
07:15 AM	0	8	0	0	8	1	1	3	0	5	0	2	2	0	4	3	2	0	0	5	22
07:30 AM	3	6	0	0	9	1	0	0	0	1	0	7	0	0	7	0	1	0	0	1	18
07:45 AM	1	6	3	0	10	0	3	0	2	5	0	4	0	0	4	1	2	0	0	3	22
Total	5	30	3	0	38	2	5	3	2	12	0	17	2	0	19	4	6	0	0	10	79
08:00 AM	2	3	1	0	6	0	2	2	0	4	1	3	0	0	4	1	0	0	0	1	15
08:15 AM	0	7	1	0	8	1	3	0	1	5	0	5	0	0	5	0	3	0	0	3	21
08:30 AM	0	6	1	1	8	0	3	3	2	8	1	12	1	0	14	0	4	0	0	4	34
08:45 AM	0	9	0	0	9	0	1	0	0	1	0	9	0	0	9	0	2	0	0	2	21
Total	2	25	3	1	31	1	9	5	3	18	2	29	1	0	32	1	9	0	0	10	91
Grand Total	7	55	6	1	69	3	14	8	5	30	2	46	3	0	51	5	15	0	0	20	170
Apprch %	10.1	79.7	8.7	1.4		10	46.7	26.7	16.7		3.9	90.2	5.9	0		25	75	0	0		
Total %	4.1	32.4	3.5	0.6	40.6	1.8	8.2	4.7	2.9	17.6	1.2	27.1	1.8	0	30	2.9	8.8	0	0	11.8	

	Archibald Avenue Southbound					4th Street Westbound					Archibald Avenue Northbound					4th Street Eastbound					
Start Time	Left	Thru	Right	RoR	App. Total		Thru	Right	RoR	App. Total		Thru	Right	RoR	App. Total		Thru	Right	RoR	App. Total	Int. Total
Peak Hour Analysis From 07:15 AM to 08:00 AM - Peak 1 of 1																					
Peak Hour for Entire Intersection Begins at 07:15 AM																					
07:15 AM	0	8	0	0	8	1	1	3	0	5	0	2	2	0	4	3	2	0	0	5	22
07:30 AM	3	6	0	0	9	1	0	0	0	1	0	7	0	0	7	0	1	0	0	1	18
07:45 AM	1	6	3	0	10	0	3	0	2	5	0	4	0	0	4	1	2	0	0	3	22
08:00 AM	2	3	1	0	6	0	2	2	0	4	1	3	0	0	4	1	0	0	0	1	15
Total Volume	6	23	4	0	33	2	6	5	2	15	1	16	2	0	19	5	5	0	0	10	77
% App. Total	18.2	69.7	12.1	0		13.3	40	33.3	13.3		5.3	84.2	10.5	0		50	50	0	0		
PHF	.500	.719	.333	.000	.825	.500	.500	.417	.250	.750	.250	.571	.250	.000	.679	.417	.625	.000	.000	.500	.875

Counts Unlimited Inc.
25286 Jaclyn Avenue
Moreno Valley, CA 92557
951-485-7934

City of Rancho Cucamonga
N/S: Archibald Avenue
E/W: 4th Street
Weather: Sunny

File Name : RNCAR4AM
Site Code : 9150063
Start Date : 5/28/2009
Page No : 2

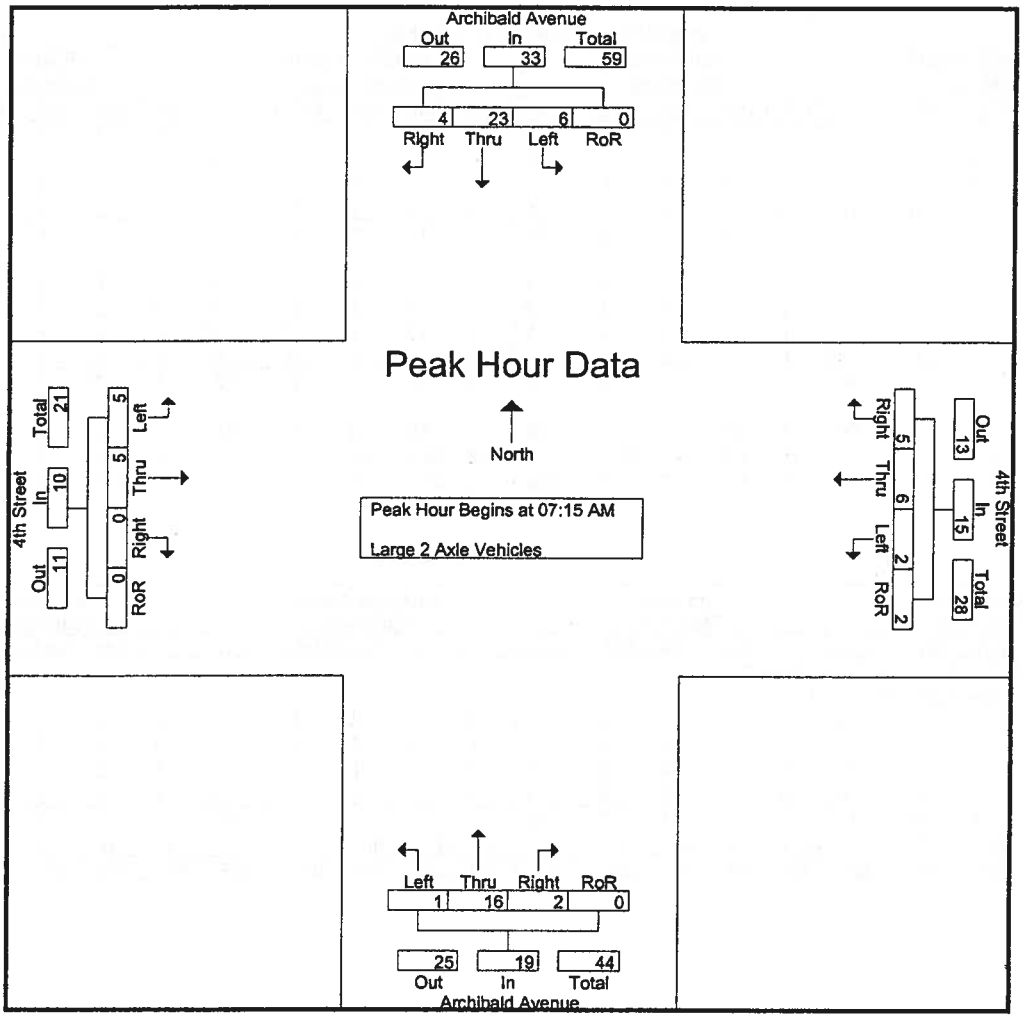

Peak Hour Analysis From 07:15 AM to 08:00 AM - Peak 1 of 1

Peak Hour for Each Approach Begins at:

	07:15 AM					07:15 AM					07:15 AM					07:15 AM				
+0 mins.	0	8	0	0	8	1	1	3	0	5	0	2	2	0	4	3	2	0	0	5
+15 mins.	3	6	0	0	9	1	0	0	0	1	0	7	0	0	7	0	1	0	0	1
+30 mins.	1	6	3	0	10	0	3	0	2	5	0	4	0	0	4	1	2	0	0	3
+45 mins.	2	3	1	0	6	0	2	2	0	4	1	3	0	0	4	1	0	0	0	1
Total Volume	6	23	4	0	33	2	6	5	2	15	1	16	2	0	19	5	5	0	0	10
% App. Total	18.2	69.7	12.1	0		13.3	40	33.3	13.3		5.3	84.2	10.5	0		50	50	0	0	
PHF	.500	.719	.333	.000	.825	.500	.500	.417	.250	.750	.250	.571	.250	.000	.679	.417	.625	.000	.000	.500

Counts Unlimited Inc.
25286 Jaclyn Avenue
Moreno Valley, CA 92557
951-485-7934

City of Rancho Cucamonga
N/S: Archibald Avenue
E/W: 4th Street
Weather: Sunny

File Name : RNCAR4AM
Site Code : 9150063
Start Date : 5/28/2009
Page No : 1

Groups Printed- 4+ Axle Trucks

	Archibald Avenue Southbound					4th Street Westbound					Archibald Avenue Northbound					4th Street Eastbound					
Start Time	Left	Thru	Right	RoR	App. Total	Left	Thru	Right	RoR	App. Total	Left	Thru	Right	RoR	App. Total	Left	Thru	Right	RoR	App. Total	Int. Total
07:00 AM	0	4	0	0	4	4	1	0	0	5	0	4	2	0	6	0	1	1	0	2	17
07:15 AM	1	0	0	0	1	2	0	0	0	2	0	5	2	0	7	0	0	0	0	0	10
07:30 AM	0	8	0	0	8	0	1	0	0	1	0	4	4	0	8	0	1	0	0	1	18
07:45 AM	1	2	0	0	3	7	0	0	0	7	0	2	1	0	3	1	2	0	0	3	16
Total	2	14	0	0	16	13	2	0	0	15	0	15	9	0	24	1	4	1	0	6	61
08:00 AM	0	3	0	0	3	1	2	2	1	6	0	7	1	0	8	0	0	0	0	0	17
08:15 AM	0	3	0	0	3	1	0	1	0	2	0	1	0	0	1	0	0	0	0	0	6
08:30 AM	1	5	1	0	7	0	2	0	1	3	0	5	2	0	7	0	1	0	0	1	18
08:45 AM	2	4	0	0	6	0	0	1	1	2	0	2	0	0	2	0	0	0	0	0	10
Total	3	15	1	0	19	2	4	4	3	13	0	15	3	0	18	0	1	0	0	1	51
Grand Total	5	29	1	0	35	15	6	4	3	28	0	30	12	0	42	1	5	1	0	7	112
Apprch %	14.3	82.9	2.9	0		53.6	21.4	14.3	10.7		0	71.4	28.6	0		14.3	71.4	14.3	0		
Total %	4.5	25.9	0.9	0	31.2	13.4	5.4	3.6	2.7	25	0	26.8	10.7	0	37.5	0.9	4.5	0.9	0	6.2	

	Archibald Avenue Southbound					4th Street Westbound					Archibald Avenue Northbound					4th Street Eastbound					
Start Time	Left	Thru	Right	RoR	App. Total		Thru	Right	RoR	App. Total		Thru	Right	RoR	App. Total		Thru	Right	RoR	App. Total	Int. Total
Peak Hour Analysis From 07:15 AM to 08:00 AM - Peak 1 of 1																					
Peak Hour for Entire Intersection Begins at 07:15 AM																					
07:15 AM	1	0	0	0	1	2	0	0	0	2	0	5	2	0	7	0	0	0	0	0	10
07:30 AM	0	8	0	0	8	0	1	0	0	1	0	4	4	0	8	0	1	0	0	1	18
07:45 AM	1	2	0	0	3	7	0	0	0	7	0	2	1	0	3	1	2	0	0	3	16
08:00 AM	0	3	0	0	3	1	2	2	1	6	0	7	1	0	8	0	0	0	0	0	17
Total Volume	2	13	0	0	15	10	3	2	1	16	0	18	8	0	26	1	3	0	0	4	61
% App. Total	13.3	86.7	0	0		62.5	18.8	12.5	6.2		0	69.2	30.8	0		25	75	0	0		
PHF	.500	.406	.000	.000	.469	.357	.375	.250	.250	.571	.000	.643	.500	.000	.813	.250	.375	.000	.000	.333	.847

Counts Unlimited Inc.
25286 Jaclyn Avenue
Moreno Valley, CA 92557
951-485-7934

City of Rancho Cucamonga
N/S: Archibald Avenue
E/W: 4th Street
Weather: Sunny

File Name : RNCAR4AM
Site Code : 9150063
Start Date : 5/28/2009
Page No : 2

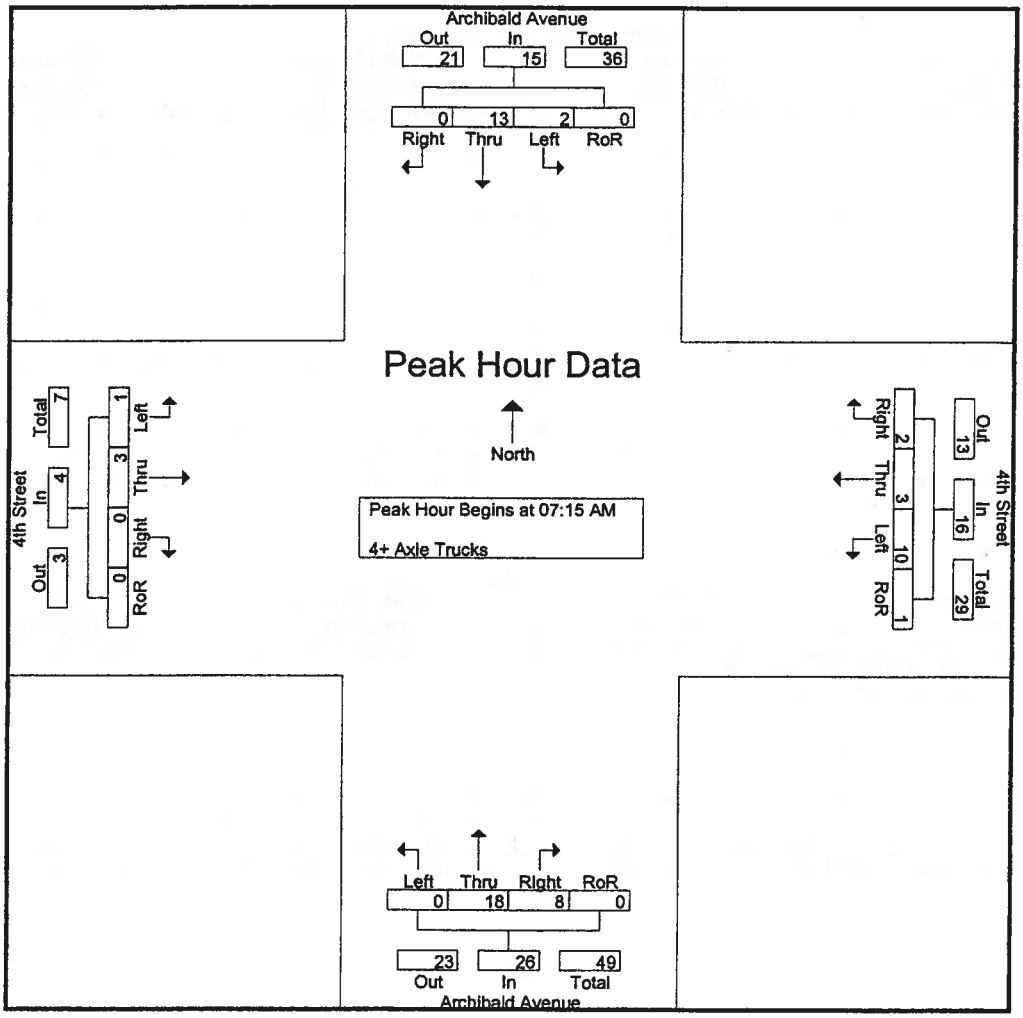

Peak Hour Analysis From 07:15 AM to 08:00 AM - Peak 1 of 1

Peak Hour for Each Approach Begins at:

	07:15 AM					07:15 AM					07:15 AM					07:15 AM				
+0 mins.	1	0	0	0	1	2	0	0	0	2	0	5	2	0	7	0	0	0	0	0
+15 mins.	0	8	0	0	8	0	1	0	0	1	0	4	4	0	8	0	1	0	0	1
+30 mins.	1	2	0	0	3	7	0	0	0	7	0	2	1	0	3	1	2	0	0	3
+45 mins.	0	3	0	0	3	1	2	2	1	6	0	7	1	0	8	0	0	0	0	0
Total Volume	2	13	0	0	15	10	3	2	1	16	0	18	8	0	26	1	3	0	0	4
% App. Total	13.3	86.7	0	0		62.5	18.8	12.5	6.2		0	69.2	30.8	0		25	75	0	0	
PHF	.500	.406	.000	.000	.469	.357	.375	.250	.250	.571	.000	.643	.500	.000	.813	.250	.375	.000	.000	.333

Counts Unlimited Inc.
25286 Jaclyn Avenue
Moreno Valley, CA 92557
951-485-7934

City of Rancho Cucamonga
N/S: Archibald Avenue
E/W: 4th Street
Weather: Sunny

File Name : RNCAR4PM
Site Code : 9150063
Start Date : 5/28/2009
Page No : 1

Groups Printed- Passenger Vehicles - Large 2 Axle Vehicles - 3 Axle Vehicles - 4+ Axle Trucks

	Archibald Avenue Southbound					4th Street Westbound					Archibald Avenue Northbound					4th Street Eastbound					
Start Time	Left	Thru	Right	RoR	App. Total	Left	Thru	Right	RoR	App. Total	Left	Thru	Right	RoR	App. Total	Left	Thru	Right	RoR	App. Total	Int. Total
04:00 PM	28	212	7	15	262	46	84	15	15	160	30	257	13	1	301	13	66	20	4	103	826
04:15 PM	17	200	11	6	234	27	86	9	13	135	33	233	18	1	285	22	84	14	6	126	780
04:30 PM	26	281	11	10	328	52	80	6	27	165	28	231	13	8	280	14	72	22	0	108	881
04:45 PM	27	252	12	9	300	31	76	15	16	138	23	260	19	3	305	10	94	15	0	119	862
Total	98	945	41	40	1124	156	326	45	71	598	114	981	63	13	1171	59	316	71	10	456	3349
05:00 PM	34	244	7	8	293	78	118	4	15	215	30	222	15	1	268	17	88	18	4	127	903
05:15 PM	31	242	12	13	298	28	92	6	12	138	44	245	18	2	309	16	82	16	8	122	867
05:30 PM	23	175	12	10	220	33	110	18	8	169	26	223	8	2	259	14	75	9	2	100	748
05:45 PM	35	218	8	6	267	16	82	13	13	124	21	211	17	2	251	8	76	13	2	99	741
Total	123	879	39	37	1078	155	402	41	48	646	121	901	58	7	1087	55	321	56	16	448	3259
Grand Total	221	1824	80	77	2202	311	728	86	119	1244	235	1882	121	20	2258	114	637	127	26	904	6608
Apprch %	10	82.8	3.6	3.5		25	58.5	6.9	9.6		10.4	83.3	5.4	0.9		12.6	70.5	14	2.9		
Total %	3.3	27.6	1.2	1.2	33.3	4.7	11	1.3	1.8	18.8	3.6	28.5	1.8	0.3	34.2	1.7	9.6	1.9	0.4	13.7	
Passenger Vehicles		1761										1812									
% Passenger Vehicles	97.7	96.5	98.8	96.1	96.7	95.5	98.8	96.5	100	97.9	97.4	96.3	85.1	100	95.8	97.4	99.4	96.1	96.2	98.6	96.9
Large 2 Axle Vehicles																					
% Large 2 Axle Vehicles	0.9	1.2	0	2.6	1.2	0.3	0.4	2.3	0	0.5	1.7	2.1	5.8	0	2.2	0.9	0	2.4	3.8	0.6	1.3
3 Axle Vehicles	0	12	1	0	13	1	2	0	0	3	2	11	1	0	14	0	2	1	0	3	33
% 3 Axle Vehicles	0	0.7	1.2	0	0.6	0.3	0.3	0	0	0.2	0.9	0.6	0.8	0	0.6	0	0.3	0.8	0	0.3	0.5
4+ Axle Trucks	3	29	0	1	33	12	4	1	0	17	0	20	10	0	30	2	2	1	0	5	85
% 4+ Axle Trucks																					

	Archibald Avenue Southbound					4th Street Westbound					Archibald Avenue Northbound					4th Street Eastbound					
Start Time	Left	Thru	Right	RoR	App. Total	Left	Thru	Right	RoR	App. Total	Left	Thru	Right	RoR	App. Total	Left	Thru	Right	RoR	App. Total	Int. Total
Peak Hour Analysis From 04:30 PM to 05:15 PM - Peak 1 of 1																					
Peak Hour for Entire Intersection Begins at 04:30 PM																					
04:30 PM	26	**281**	11	10	**328**	52	80	6	**27**	165	28	231	13	**8**	280	14	72	**22**	0	108	881
04:45 PM	27	252	**12**	9	300	31	76	**15**	16	138	23	**260**	**19**	3	305	10	**94**	15	0	119	862
05:00 PM	**34**	244	7	8	293	**78**	**118**	4	15	**215**	30	222	15	1	268	**17**	88	18	4	**127**	**903**
05:15 PM	31	242	12	**13**	298	28	92	6	12	138	**44**	245	18	2	**309**	16	82	16	**8**	122	867
Total Volume	118	1019	42	40	1219	189	366	31	70	656	125	958	65	14	1162	57	336	71	12	476	3513
% App. Total	9.7	83.6	3.4	3.3		28.8	55.8	4.7	10.7		10.8	82.4	5.6	1.2		12	70.6	14.9	2.5		
PHF	.868	.907	.875	.769	.929	.606	.775	.517	.648	.763	.710	.921	.855	.438	.940	.838	.894	.807	.375	.937	.973

Counts Unlimited Inc.
25286 Jaclyn Avenue
Moreno Valley, CA 92557
951-485-7934

City of Rancho Cucamonga
N/S: Archibald Avenue
E/W: 4th Street
Weather: Sunny

File Name : RNCAR4PM
Site Code : 9150063
Start Date : 5/28/2009
Page No : 2

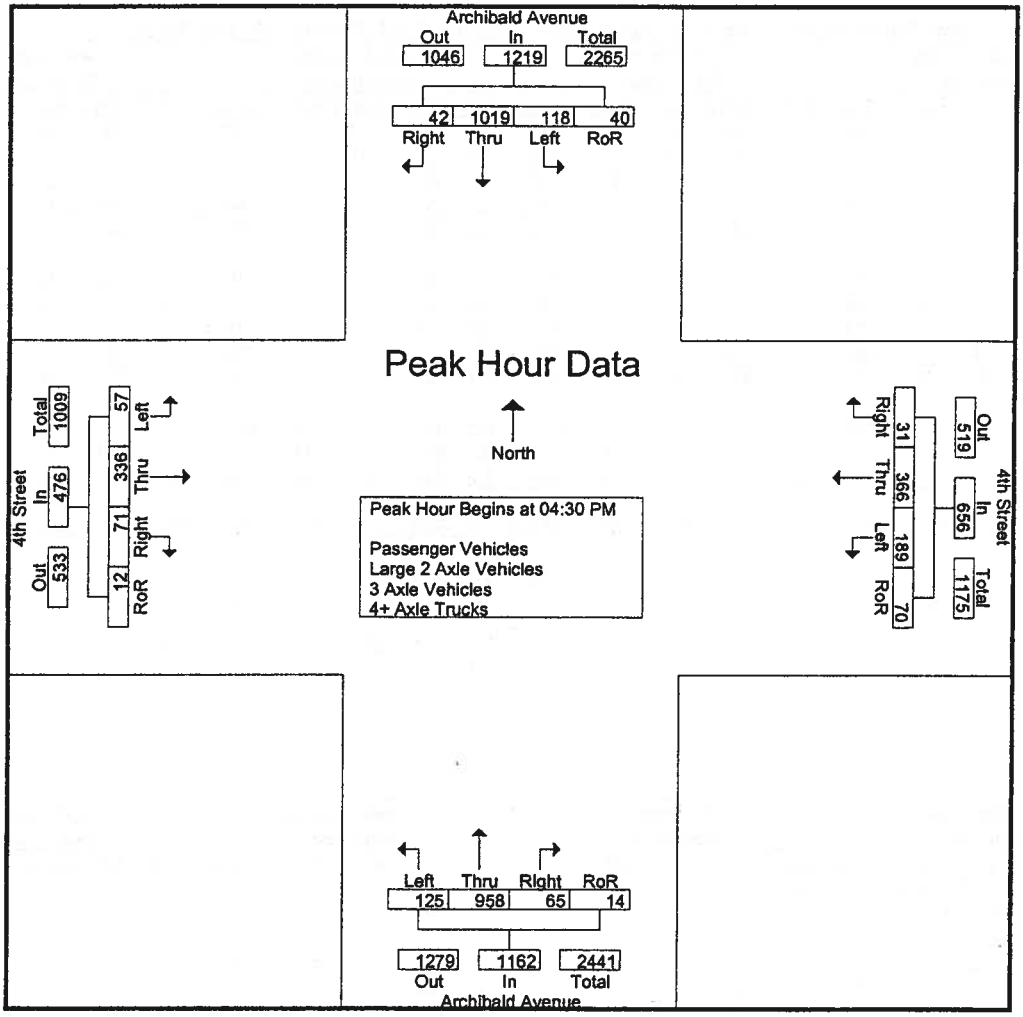

Peak Hour Analysis From 04:30 PM to 05:15 PM - Peak 1 of 1

Peak Hour for Each Approach Begins at:

	04:30 PM					04:30 PM					04:30 PM					04:30 PM				
+0 mins.	26	**281**	11	10	**328**	52	80	6	**27**	165	28	231	13	**8**	280	14	72	**22**	0	108
+15 mins.	27	252	**12**	9	300	31	76	**15**	16	138	23	**260**	**19**	3	305	10	**94**	15	0	119
+30 mins.	**34**	244	7	8	293	**78**	**118**	4	15	**215**	30	222	15	1	268	**17**	88	18	**4**	**127**
+45 mins.	31	242	12	**13**	298	28	92	6	12	138	**44**	245	18	2	**309**	16	82	16	**8**	122
Total Volume	118	1019	42	40	1219	189	366	31	70	656	125	958	65	14	1162	57	336	71	12	476
% App. Total	9.7	83.6	3.4	3.3		28.8	55.8	4.7	10.7		10.8	82.4	5.6	1.2		12	70.6	14.9	2.5	
PHF	.868	.907	.875	.769	.929	.606	.775	.517	.648	.763	.710	.921	.855	.438	.940	.838	.894	.807	.375	.937

Counts Unlimited Inc.
25286 Jaclyn Avenue
Moreno Valley, CA 92557
951-485-7934

City of Rancho Cucamonga
N/S: Archibald Avenue
E/W: 4th Street
Weather: Sunny

File Name : RNCAR4PM
Site Code : 9150063
Start Date : 5/28/2009
Page No : 1

Groups Printed- Passenger Vehicles

	Archibald Avenue Southbound					4th Street Westbound					Archibald Avenue Northbound					4th Street Eastbound					
Start Time	Left	Thru	Right	RoR	App. Total	Left	Thru	Right	RoR	App. Total	Left	Thru	Right	RoR	App. Total	Left	Thru	Right	RoR	App. Total	Int. Total
04:00 PM	27	206	6	15	254	44	82	15	15	156	30	237	7	1	275	13	65	20	3	101	786
04:15 PM	17	186	11	6	220	24	85	7	13	129	32	221	15	1	269	20	83	14	6	123	741
04:30 PM	26	266	11	10	313	52	79	6	27	164	28	221	13	8	270	14	72	19	0	105	852
04:45 PM	25	242	12	8	287	27	76	15	16	134	22	251	17	3	293	10	94	15	0	119	833
Total	95	900	40	39	1074	147	322	43	71	583	112	930	52	13	1107	57	314	68	9	448	3212
05:00 PM	34	239	7	8	288	78	117	3	15	213	28	220	15	1	264	17	86	18	4	125	890
05:15 PM	31	233	12	13	289	27	92	6	12	137	43	241	16	2	302	15	82	16	8	121	849
05:30 PM	21	173	12	8	214	31	107	18	8	164	25	216	7	2	250	14	75	8	2	99	727
05:45 PM	35	216	8	6	265	14	81	13	13	121	21	205	13	2	241	8	76	12	2	98	725
Total	121	861	39	35	1056	150	397	40	48	635	117	882	51	7	1057	54	319	54	16	443	3191
Grand Total	216	1761	79	74	2130	297	719	83	119	1218	229	1812	103	20	2164	111	633	122	25	891	6403
Apprch %	10.1	82.7	3.7	3.5		24.4	59	6.8	9.8		10.6	83.7	4.8	0.9		12.5	71	13.7	2.8		
Total %	3.4	27.5	1.2	1.2	33.3	4.6	11.2	1.3	1.9	19	3.6	28.3	1.6	0.3	33.8	1.7	9.9	1.9	0.4	13.9	

	Archibald Avenue Southbound					4th Street Westbound					Archibald Avenue Northbound					4th Street Eastbound					
Start Time	Left	Thru	Right	RoR	App. Total		Thru	Right	RoR	App. Total		Thru	Right	RoR	App. Total		Thru	Right	RoR	App. Total	Int. Total
Peak Hour Analysis From 04:30 PM to 05:15 PM - Peak 1 of 1																					
Peak Hour for Entire Intersection Begins at 04:30 PM																					
04:30 PM	26	**266**	11	10	**313**	52	79	6	27	164	28	221	13	**8**	270	14	72	**19**	0	105	852
04:45 PM	25	242	**12**	8	287	27	76	**15**	16	134	22	**251**	17	3	293	10	94	15	0	119	833
05:00 PM	**34**	239	7	8	288	**78**	**117**	3	15	**213**	28	220	15	1	264	17	86	18	4	**125**	**890**
05:15 PM	31	233	12	**13**	289	27	92	6	12	137	**43**	241	16	2	**302**	15	82	16	**8**	121	849
Total Volume	116	980	42	39	1177	184	364	30	70	648	121	933	61	14	1129	56	334	68	12	470	3424
% App. Total	9.9	83.3	3.6	3.3		28.4	56.2	4.6	10.8		10.7	82.6	5.4	1.2		11.9	71.1	14.5	2.6		
PHF	.853	.921	.875	.750	.940	.590	.778	.500	.648	.761	.703	.929	.897	.438	.935	.824	.888	.895	.375	.940	.962

Counts Unlimited Inc.
25286 Jaclyn Avenue
Moreno Valley, CA 92557
951-485-7934

City of Rancho Cucamonga
N/S: Archibald Avenue
E/W: 4th Street
Weather: Sunny

File Name : RNCAR4PM
Site Code : 9150063
Start Date : 5/28/2009
Page No : 2

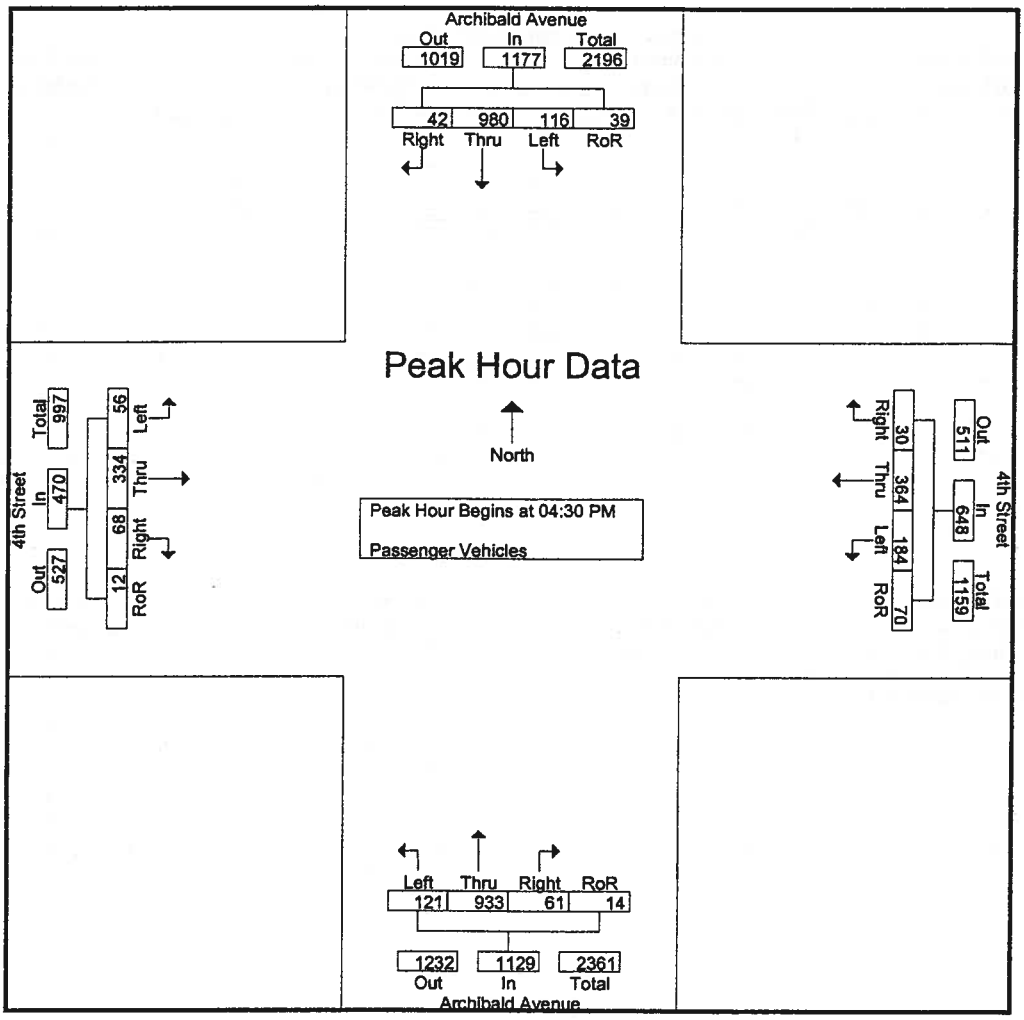

Peak Hour Analysis From 04:30 PM to 05:15 PM - Peak 1 of 1

Peak Hour for Each Approach Begins at:

	04:30 PM					04:30 PM					04:30 PM					04:30 PM				
+0 mins.	26	**266**	11	10	**313**	52	79	6	**27**	164	28	221	13	**8**	270	14	72	**19**	0	105
+15 mins.	25	242	**12**	8	287	27	76	**15**	16	134	22	**251**	**17**	3	293	10	**94**	15	0	119
+30 mins.	**34**	239	7	8	288	**78**	**117**	3	15	**213**	28	220	15	1	264	**17**	86	18	**4**	**125**
+45 mins.	31	233	12	**13**	289	27	92	6	12	137	**43**	241	16	2	302	15	82	16	**8**	121
Total Volume	116	980	42	39	1177	184	364	30	70	648	121	933	61	14	1129	56	334	68	12	470
% App. Total	9.9	83.3	3.6	3.3		28.4	56.2	4.6	10.8		10.7	82.6	5.4	1.2		11.9	71.1	14.5	2.6	
PHF	.853	.921	.875	.750	.940	.590	.778	.500	.648	.761	.703	.929	.897	.438	.935	.824	.888	.895	.375	.940

Counts Unlimited Inc.
25286 Jaclyn Avenue
Moreno Valley, CA 92557
951-485-7934

City of Rancho Cucamonga
N/S: Archibald Avenue
E/W: 4th Street
Weather: Sunny

File Name : RNCAR4PM
Site Code : 9150063
Start Date : 5/28/2009
Page No : 1

Groups Printed- Large 2 Axle Vehicles

	Archibald Avenue Southbound					4th Street Westbound					Archibald Avenue Northbound					4th Street Eastbound					
Start Time	Left	Thru	Right	RoR	App. Total	Left	Thru	Right	RoR	App. Total	Left	Thru	Right	RoR	App. Total	Left	Thru	Right	RoR	App. Total	Int. Total
04:00 PM	1	1	0	0	2	0	1	0	0	1	0	12	5	0	17	0	0	0	1	1	21
04:15 PM	0	6	0	0	6	0	0	2	0	2	1	8	2	0	11	0	0	0	0	0	19
04:30 PM	0	5	0	0	5	0	0	0	0	0	0	5	0	0	5	0	0	2	0	2	12
04:45 PM	0	3	0	1	4	0	0	0	0	0	0	7	0	0	7	0	0	0	0	0	11
Total	1	15	0	1	17	0	1	2	0	3	1	32	7	0	40	0	0	2	1	3	63
05:00 PM	0	2	0	0	2	0	0	0	0	0	2	1	0	0	3	0	0	0	0	0	5
05:15 PM	0	2	0	0	2	0	0	0	0	0	1	1	0	0	2	1	0	0	0	1	5
05:30 PM	1	1	0	1	3	0	1	0	0	1	0	3	0	0	3	0	0	1	0	1	8
05:45 PM	0	2	0	0	2	1	1	0	0	2	0	2	0	0	2	0	0	0	0	0	6
Total	1	7	0	1	9	1	2	0	0	3	3	7	0	0	10	1	0	1	0	2	24
Grand Total	2	22	0	2	26	1	3	2	0	6	4	39	7	0	50	1	0	3	1	5	87
Apprch %	7.7	84.6	0	7.7		16.7	50	33.3	0		8	78	14	0		20	0	60	20		
Total %	2.3	25.3	0	2.3	29.9	1.1	3.4	2.3	0	6.9	4.6	44.8	8	0	57.5	1.1	0	3.4	1.1	5.7	

	Archibald Avenue Southbound					4th Street Westbound					Archibald Avenue Northbound					4th Street Eastbound					
Start Time	Left	Thru	Right	RoR	App. Total		Thru	Right	RoR	App. Total		Thru	Right	RoR	App. Total		Thru	Right	RoR	App. Total	Int. Total
Peak Hour Analysis From 04:30 PM to 05:15 PM - Peak 1 of 1																					
Peak Hour for Entire Intersection Begins at 04:30 PM																					
04:30 PM	0	5	0	0	5	0	0	0	0	0	0	5	0	0	5	0	0	2	0	2	12
04:45 PM	0	3	0	1	4	0	0	0	0	0	0	7	0	0	7	0	0	0	0	0	11
05:00 PM	0	2	0	0	2	0	0	0	0	0	2	1	0	0	3	0	0	0	0	0	5
05:15 PM	0	2	0	0	2	0	0	0	0	0	1	1	0	0	2	1	0	0	0	1	5
Total Volume	0	12	0	1	13	0	0	0	0	0	3	14	0	0	17	1	0	2	0	3	33
% App. Total	0	92.3	0	7.7		0	0	0	0		17.6	82.4	0	0		33.3	0	66.7	0		
PHF	.000	.600	.000	.250	.650	.000	.000	.000	.000	.000	.375	.500	.000	.000	.607	.250	.000	.250	.000	.375	.688

Counts Unlimited Inc.
25286 Jaclyn Avenue
Moreno Valley, CA 92557
951-485-7934

City of Rancho Cucamonga
N/S: Archibald Avenue
E/W: 4th Street
Weather: Sunny

File Name : RNCAR4PM
Site Code : 9150063
Start Date : 5/28/2009
Page No : 2

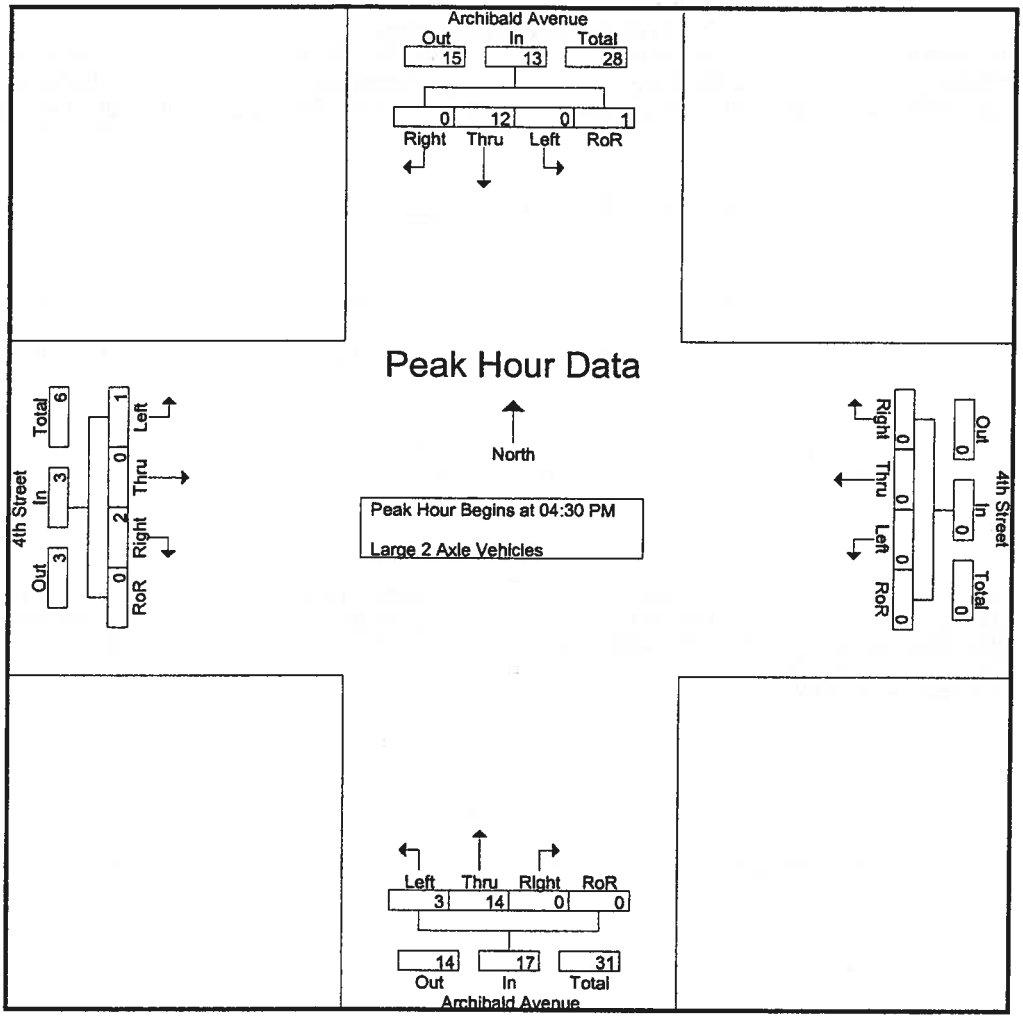

Peak Hour Analysis From 04:30 PM to 05:15 PM - Peak 1 of 1

Peak Hour for Each Approach Begins at:

	04:30 PM					04:30 PM					04:30 PM					04:30 PM				
+0 mins.	0	5	0	0	5	0	0	0	0	0	0	5	0	0	5	0	0	2	0	2
+15 mins.	0	3	0	1	4	0	0	0	0	0	0	7	0	0	7	0	0	0	0	0
+30 mins.	0	2	0	0	2	0	0	0	0	0	2	1	0	0	3	0	0	0	0	0
+45 mins.	0	2	0	0	2	0	0	0	0	0	1	1	0	0	2	1	0	0	0	1
Total Volume	0	12	0	1	13	0	0	0	0	0	3	14	0	0	17	1	0	2	0	3
% App. Total	0	92.3	0	7.7		0	0	0	0		17.6	82.4	0	0		33.3	0	66.7	0	
PHF	.000	.600	.000	.250	.650	.000	.000	.000	.000	.000	.375	.500	.000	.000	.607	.250	.000	.250	.000	.375

Counts Unlimited Inc.
25286 Jaclyn Avenue
Moreno Valley, CA 92557
951-485-7934

City of Rancho Cucamonga
N/S: Archibald Avenue
E/W: 4th Street
Weather: Sunny

File Name : RNCAR4PM
Site Code : 9150063
Start Date : 5/28/2009
Page No : 1

Groups Printed- 3 Axle Vehicles

	Archibald Avenue Southbound					4th Street Westbound					Archibald Avenue Northbound					4th Street Eastbound					
Start Time	Left	Thru	Right	RoR	App. Total	Left	Thru	Right	RoR	App. Total	Left	Thru	Right	RoR	App. Total	Left	Thru	Right	RoR	App. Total	Int. Total
04:00 PM	0	3	1	0	4	0	0	0	0	0	0	4	0	0	4	0	0	0	0	0	8
04:15 PM	0	1	0	0	1	1	0	0	0	1	0	1	0	0	1	0	1	0	0	1	4
04:30 PM	0	3	0	0	3	0	1	0	0	1	0	1	0	0	1	0	0	1	0	1	6
04:45 PM	0	2	0	0	2	0	0	0	0	0	1	1	0	0	2	0	0	0	0	0	4
Total	0	9	1	0	10	1	1	0	0	2	1	7	0	0	8	0	1	1	0	2	22
05:00 PM	0	1	0	0	1	0	1	0	0	1	0	0	0	0	0	0	1	0	0	1	3
05:15 PM	0	2	0	0	2	0	0	0	0	0	0	2	1	0	3	0	0	0	0	0	5
05:30 PM	0	0	0	0	0	0	0	0	0	0	1	1	0	0	2	0	0	0	0	0	2
05:45 PM	0	0	0	0	0	0	0	0	0	0	0	1	0	0	1	0	0	0	0	0	1
Total	0	3	0	0	3	0	1	0	0	1	1	4	1	0	6	0	1	0	0	1	11
Grand Total	0	12	1	0	13	1	2	0	0	3	2	11	1	0	14	0	2	1	0	3	33
Apprch %	0	92.3	7.7	0		33.3	66.7	0	0		14.3	78.6	7.1	0		0	66.7	33.3	0		
Total %	0	36.4	3	0	39.4	3	6.1	0	0	9.1	6.1	33.3	3	0	42.4	0	6.1	3	0	9.1	

	Archibald Avenue Southbound					4th Street Westbound					Archibald Avenue Northbound					4th Street Eastbound					
Start Time	Left	Thru	Right	RoR	App. Total		Thru	Right	RoR	App. Total		Thru	Right	RoR	App. Total		Thru	Right	RoR	App. Total	Int. Total
Peak Hour Analysis From 04:30 PM to 05:15 PM - Peak 1 of 1																					
Peak Hour for Entire Intersection Begins at 04:30 PM																					
04:30 PM	0	3	0	0	3	0	1	0	0	1	0	1	0	0	1	0	0	1	0	1	6
04:45 PM	0	2	0	0	2	0	0	0	0	0	1	1	0	0	2	0	0	0	0	0	4
05:00 PM	0	1	0	0	1	0	1	0	0	1	0	0	0	0	0	0	1	0	0	1	3
05:15 PM	0	2	0	0	2	0	0	0	0	0	0	2	1	0	3	0	0	0	0	0	5
Total Volume	0	8	0	0	8	0	2	0	0	2	1	4	1	0	6	0	1	1	0	2	18
% App. Total	0	100	0	0		0	100	0	0		16.7	66.7	16.7	0		0	50	50	0		
PHF	.000	.667	.000	.000	.667	.000	.500	.000	.000	.500	.250	.500	.250	.000	.500	.000	.250	.250	.000	.500	.750

Counts Unlimited Inc.
25286 Jaclyn Avenue
Moreno Valley, CA 92557
951-485-7934

City of Rancho Cucamonga
N/S: Archibald Avenue
E/W: 4th Street
Weather: Sunny

File Name : RNCAR4PM
Site Code : 9150063
Start Date : 5/28/2009
Page No : 2

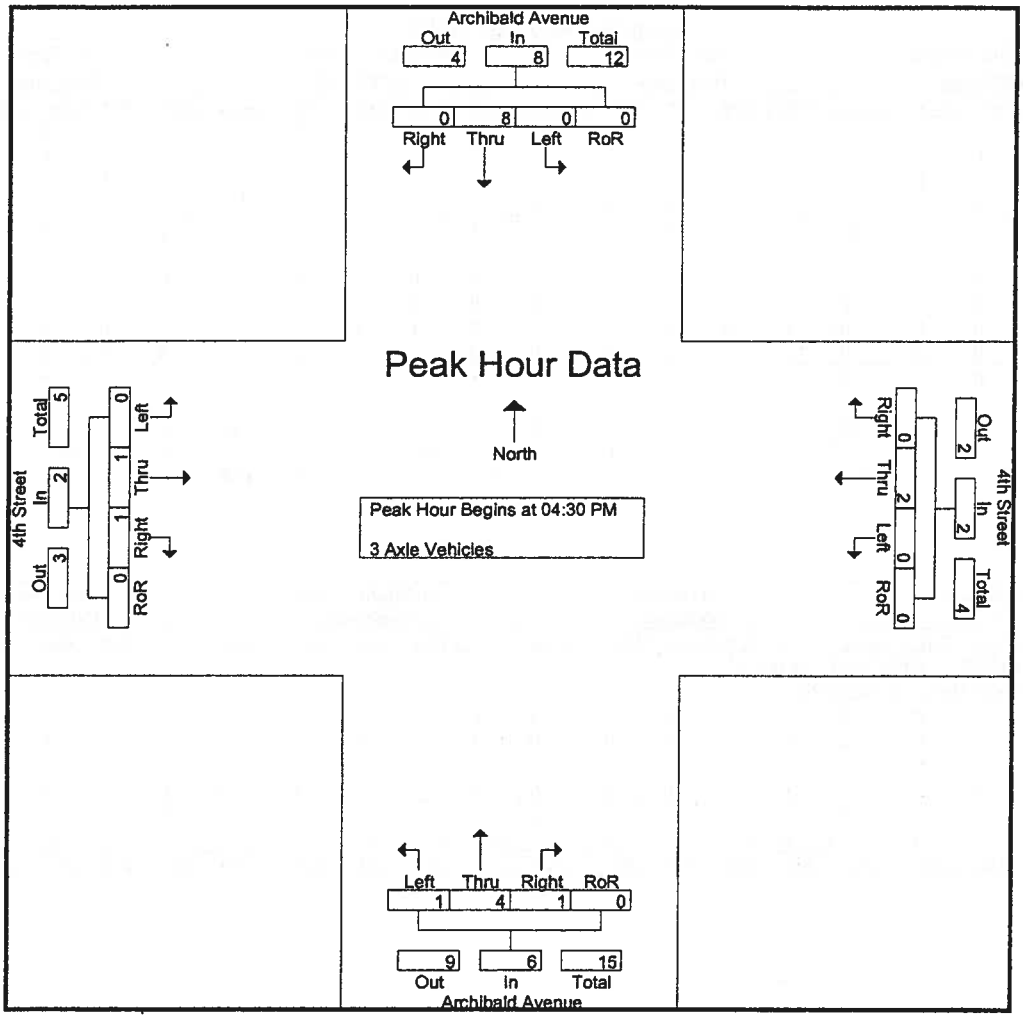

Peak Hour Analysis From 04:30 PM to 05:15 PM - Peak 1 of 1

Peak Hour for Each Approach Begins at:

	04:30 PM					04:30 PM					04:30 PM					04:30 PM				
+0 mins.	0	3	0	0	3	0	1	0	0	1	0	1	0	0	1	0	0	1	0	1
+15 mins.	0	2	0	0	2	0	0	0	0	0	1	1	0	0	2	0	0	0	0	0
+30 mins.	0	1	0	0	1	0	1	0	0	1	0	0	0	0	0	0	1	0	0	1
+45 mins.	0	2	0	0	2	0	0	0	0	0	0	2	1	0	3	0	0	0	0	0
Total Volume	0	8	0	0	8	0	2	0	0	2	1	4	1	0	6	0	1	1	0	2
% App. Total	0	100	0	0		0	100	0	0		16.7	66.7	16.7	0		0	50	50	0	
PHF	.000	.667	.000	.000	.667	.000	.500	.000	.000	.500	.250	.500	.250	.000	.500	.000	.250	.250	.000	.500

Counts Unlimited Inc.
25286 Jaclyn Avenue
Moreno Valley, CA 92557
951-485-7934

City of Rancho Cucamonga
N/S: Archibald Avenue
E/W: 4th Street
Weather: Sunny

File Name : RNCAR4PM
Site Code : 9150063
Start Date : 5/28/2009
Page No : 1

Groups Printed- 4+ Axle Trucks

	Archibald Avenue Southbound					4th Street Westbound					Archibald Avenue Northbound					4th Street Eastbound					
Start Time	Left	Thru	Right	RoR	App. Total	Left	Thru	Right	RoR	App. Total	Left	Thru	Right	RoR	App. Total	Left	Thru	Right	RoR	App. Total	Int. Total
04:00 PM	0	2	0	0	2	2	1	0	0	3	0	4	1	0	5	0	1	0	0	1	11
04:15 PM	0	7	0	0	7	2	1	0	0	3	0	3	1	0	4	2	0	0	0	2	16
04:30 PM	0	7	0	0	7	0	0	0	0	0	0	4	0	0	4	0	0	0	0	0	11
04:45 PM	2	5	0	0	7	4	0	0	0	4	0	1	2	0	3	0	0	0	0	0	14
Total	2	21	0	0	23	8	2	0	0	10	0	12	4	0	16	2	1	0	0	3	52
05:00 PM	0	2	0	0	2	0	0	1	0	1	0	1	0	0	1	0	1	0	0	1	5
05:15 PM	0	5	0	0	5	1	0	0	0	1	0	1	1	0	2	0	0	0	0	0	8
05:30 PM	1	1	0	1	3	2	2	0	0	4	0	3	1	0	4	0	0	0	0	0	11
05:45 PM	0	0	0	0	0	1	0	0	0	1	0	3	4	0	7	0	0	1	0	1	9
Total	1	8	0	1	10	4	2	1	0	7	0	8	6	0	14	0	1	1	0	2	33
Grand Total	3	29	0	1	33	12	4	1	0	17	0	20	10	0	30	2	2	1	0	5	85
Apprch %	9.1	87.9	0	3		70.6	23.5	5.9	0		0	66.7	33.3	0		40	40	20	0		
Total %	3.5	34.1	0	1.2	38.8	14.1	4.7	1.2	0	20	0	23.5	11.8	0	35.3	2.4	2.4	1.2	0	5.9	

	Archibald Avenue Southbound					4th Street Westbound					Archibald Avenue Northbound					4th Street Eastbound					
Start Time	Left	Thru	Right	RoR	App. Total		Thru	Right	RoR	App. Total		Thru	Right	RoR	App. Total		Thru	Right	RoR	App. Total	Int. Total
Peak Hour Analysis From 04:30 PM to 05:15 PM - Peak 1 of 1																					
Peak Hour for Entire Intersection Begins at 04:30 PM																					
04:30 PM	0	7	0	0	7	0	0	0	0	0	0	4	0	0	4	0	0	0	0	0	11
04:45 PM	2	5	0	0	7	4	0	0	0	4	0	1	2	0	3	0	0	0	0	0	14
05:00 PM	0	2	0	0	2	0	0	1	0	1	0	1	0	0	1	0	1	0	0	1	5
05:15 PM	0	5	0	0	5	1	0	0	0	1	0	1	1	0	2	0	0	0	0	0	8
Total Volume	2	19	0	0	21	5	0	1	0	6	0	7	3	0	10	0	1	0	0	1	38
% App. Total	9.5	90.5	0	0		83.3	0	16.7	0		0	70	30	0		0	100	0	0		
PHF	.250	.679	.000	.000	.750	.313	.000	.250	.000	.375	.000	.438	.375	.000	.625	.000	.250	.000	.000	.250	.679

Counts Unlimited Inc.
25286 Jaclyn Avenue
Moreno Valley, CA 92557
951-485-7934

City of Rancho Cucamonga
N/S: Archibald Avenue
E/W: 4th Street
Weather: Sunny

File Name : RNCAR4PM
Site Code : 9150063
Start Date : 5/28/2009
Page No : 2

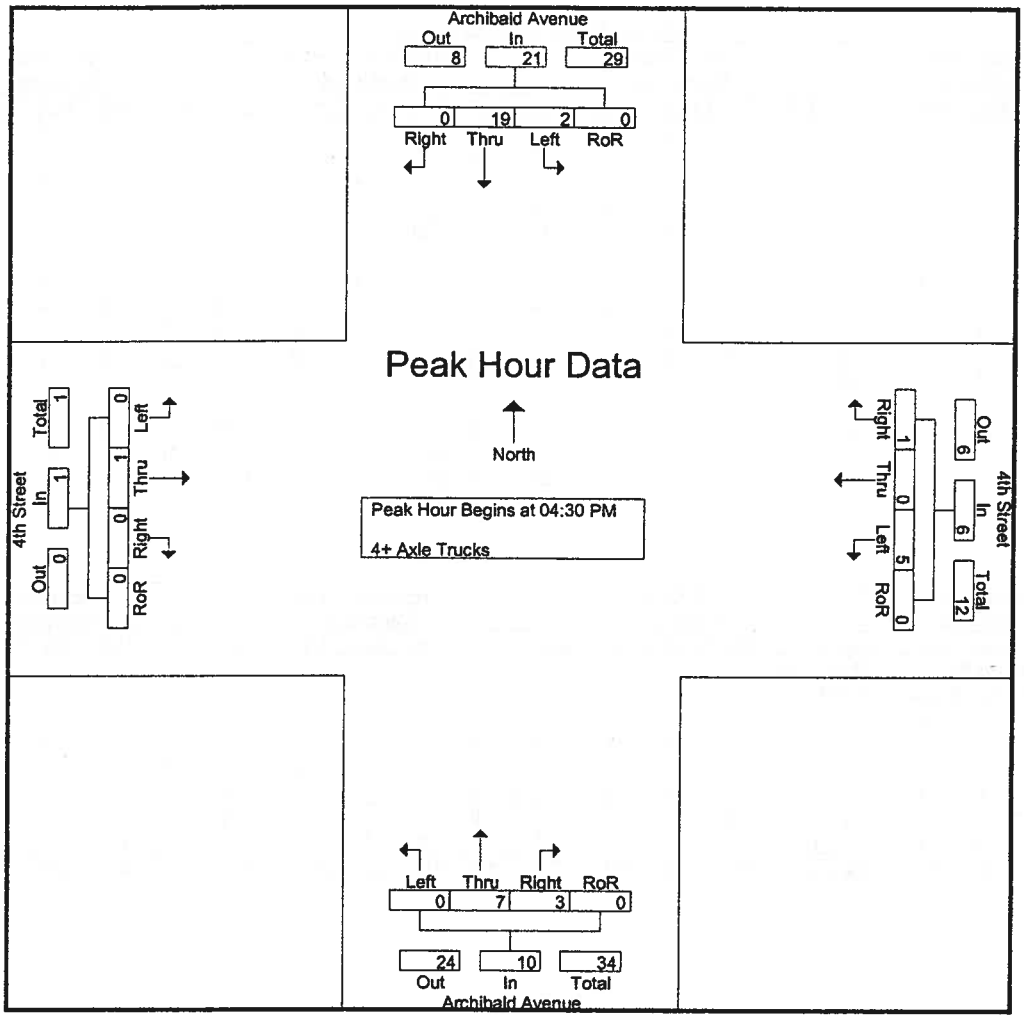

Peak Hour Analysis From 04:30 PM to 05:15 PM - Peak 1 of 1

Peak Hour for Each Approach Begins at:

	04:30 PM					04:30 PM					04:30 PM					04:30 PM				
+0 mins.	0	7	0	0	7	0	0	0	0	0	0	4	0	0	4	0	0	0	0	0
+15 mins.	2	5	0	0	7	4	0	0	0	4	0	1	2	0	3	0	0	0	0	0
+30 mins.	0	2	0	0	2	0	0	1	0	1	0	1	0	0	1	0	1	0	0	1
+45 mins.	0	5	0	0	5	1	0	0	0	1	0	1	1	0	2	0	0	0	0	0
Total Volume	2	19	0	0	21	5	0	1	0	6	0	7	3	0	10	0	1	0	0	1
% App. Total	9.5	90.5	0	0		83.3	0	16.7	0		0	70	30	0		0	100	0	0	
PHF	.250	.679	.000	.000	.750	.313	.000	.250	.000	.375	.000	.438	.375	.000	.625	.000	.250	.000	.000	.250

PASSENGER CAR EQUIVALENCY PEAK HOUR COUNT SUMMARY

INTERSECTION 12
Haven Avenue (NS) / Baseline Road (EW)

AM PEAK HOUR

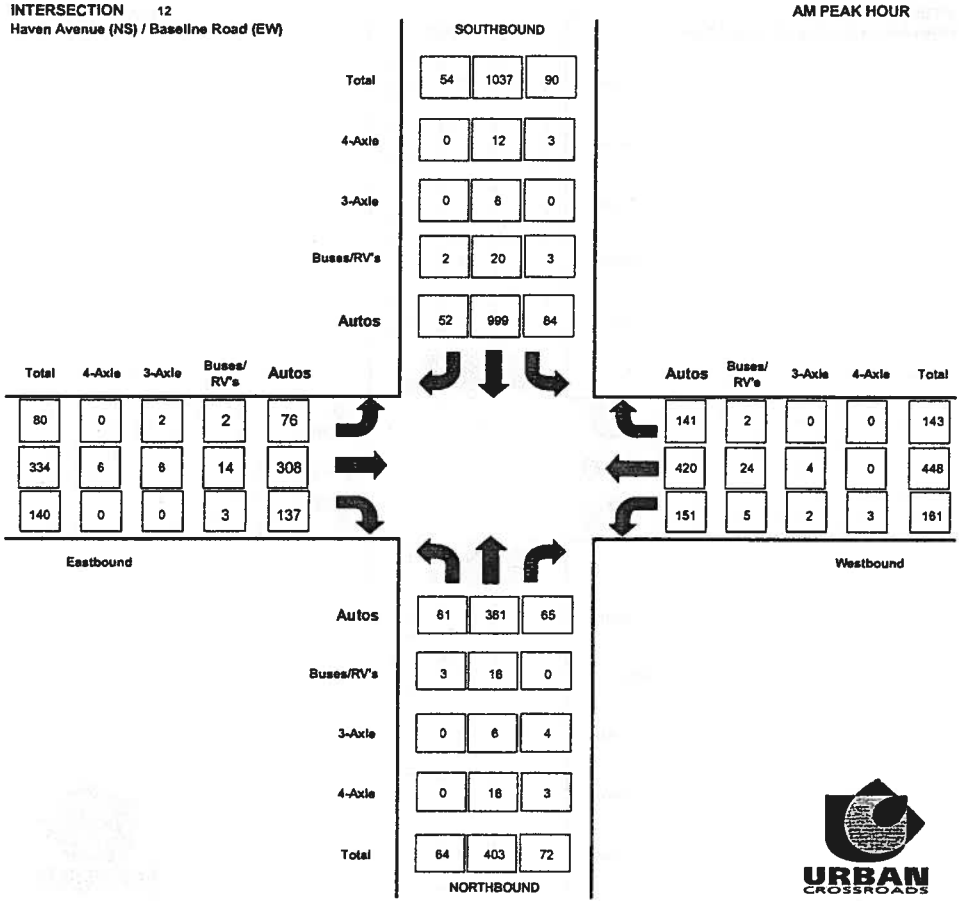

INTERSECTION 12
Haven Avenue (NS) / Baseline Road (EW)

PM PEAK HOUR

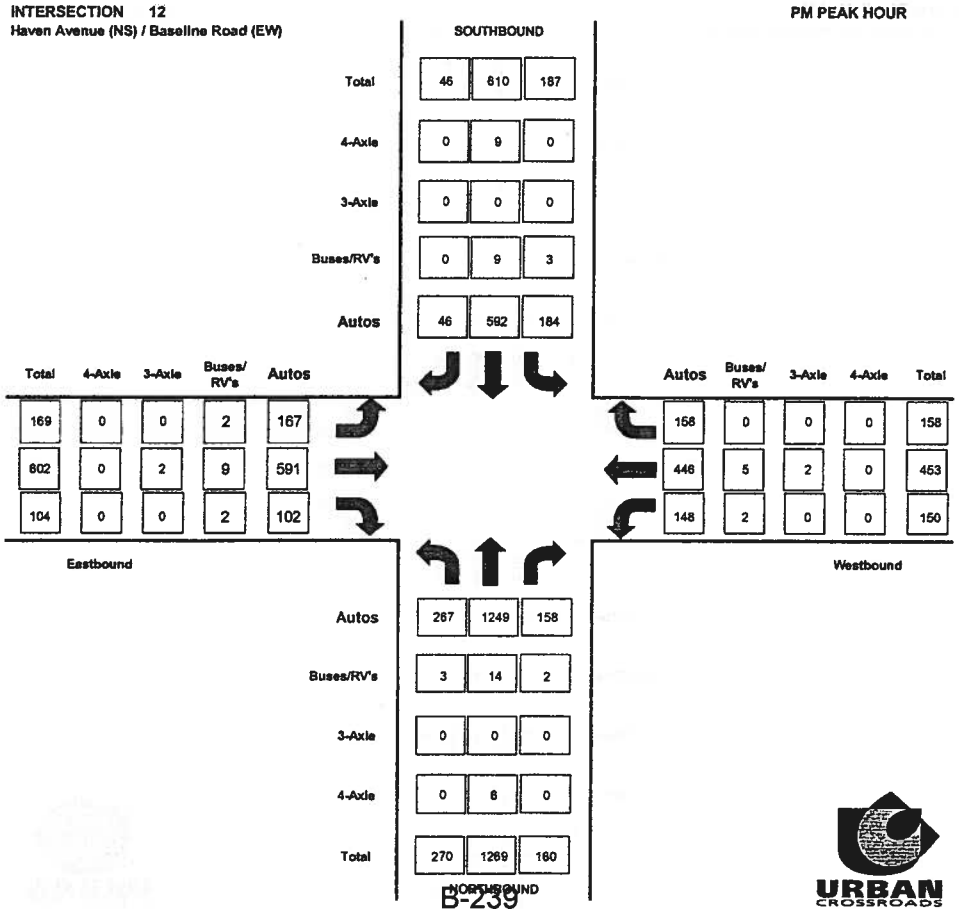

RAW PEAK HOUR COUNT SUMMARY

INTERSECTION 12
Haven Avenue (NS) / Baseline Road (EW)

AM PEAK HOUR

SOUTHBOUND

Total	53	1019	87
4-Axle	0	4	1
3-Axle	0	3	0
Buses/RV's	1	13	2
Autos	52	999	84

Total	4-Axle	3-Axle	Buses/ RV's	Autos
78	0	1	1	76
322	2	3	9	308
139	0	0	2	137

Eastbound

Autos	Buses/ RV's	3-Axle	4-Axle	Total
141	1	0	0	142
420	16	2	0	438
151	3	1	1	156

Westbound

Autos	61	361	65
Buses/RV's	2	12	0
3-Axle	0	3	2
4-Axle	0	6	1
Total	63	382	68

NORTHBOUND

URBAN CROSSROADS

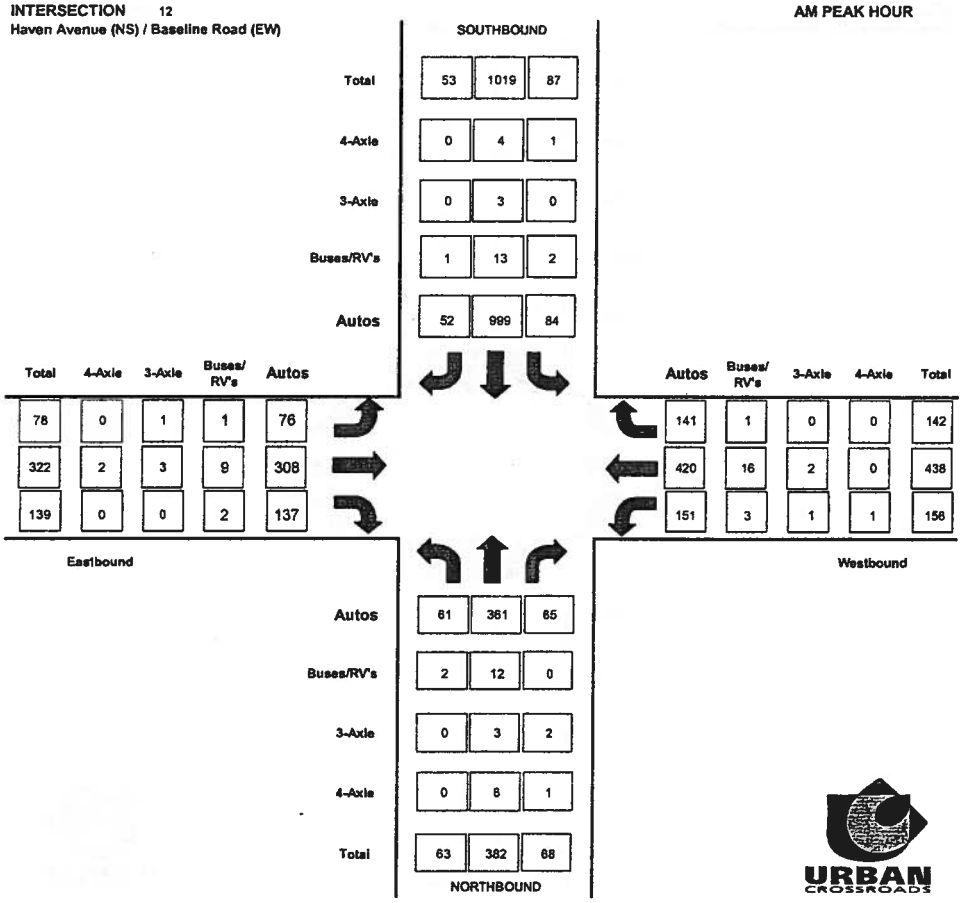

INTERSECTION 12
Haven Avenue (NS) / Baseline Road (EW)

PM PEAK HOUR

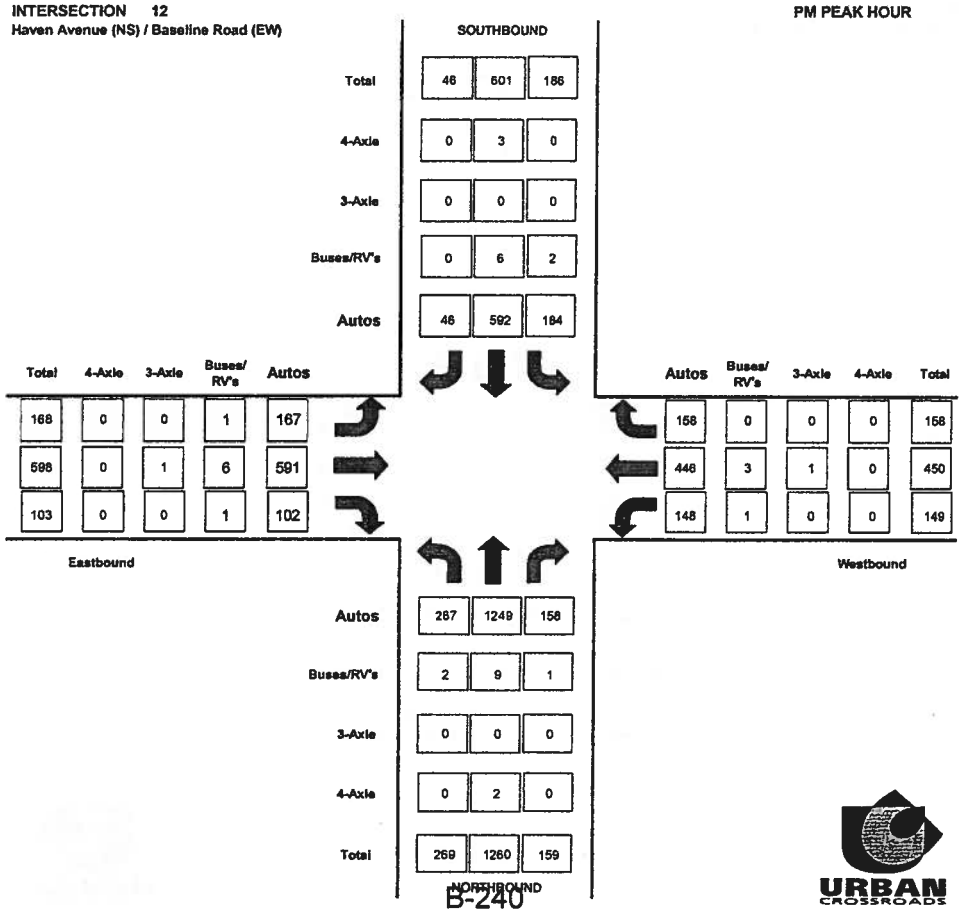

SOUTHBOUND

Total	46	601	186
4-Axle	0	3	0
3-Axle	0	0	0
Buses/RV's	0	6	2
Autos	46	592	184

Total	4-Axle	3-Axle	Buses/ RV's	Autos
168	0	0	1	167
598	0	1	6	591
103	0	0	1	102

Eastbound

Autos	Buses/ RV's	3-Axle	4-Axle	Total
158	0	0	0	158
446	3	1	0	450
148	1	0	0	149

Westbound

Autos	267	1249	158
Buses/RV's	2	9	1
3-Axle	0	0	0
4-Axle	0	2	0
Total	269	1260	159

NORTHBOUND

URBAN CROSSROADS

U:\UrbAn_98800-07000\0670\0678\Excel\Existing Vols\2 Graphics Summary_Non PCE

Counts Unlimited Inc.
25286 Jaclyn Avenue
Moreno Valley, CA 92557
951-485-7934

City of Rancho Cucamonga
N/S: Haven Avenue
E/W: Baseline Road
Weather: Sunny

File Name : RNCHABAAM
Site Code : 9150075
Start Date : 6/2/2009
Page No : 1

Groups Printed- Passenger Vehicles - Large 2 Axle Vehicles - 3 Axle Vehicles - 4+ Axle Trucks

	Haven Avenue Southbound					Baseline Road Westbound					Haven Avenue Northbound					Baseline Road Eastbound					
Start Time	Left	Thru	Right	RoR	App. Total	Left	Thru	Right	RoR	App. Total	Left	Thru	Right	RoR	App. Total	Left	Thru	Right	RoR	App. Total	Int. Total
07:00 AM	14	160	5	4	183	20	114	27	11	172	4	83	12	7	106	18	79	14	8	119	580
07:15 AM	20	218	6	7	251	35	112	20	12	179	18	84	10	21	133	20	99	15	11	145	708
07:30 AM	18	236	2	10	266	42	124	23	11	200	18	116	7	9	150	15	87	28	9	139	755
07:45 AM	25	297	6	9	337	38	103	15	17	173	15	89	5	5	114	23	80	29	15	147	771
Total	77	911	19	30	1037	135	453	85	51	724	55	372	34	42	503	76	345	86	43	550	2814
08:00 AM	24	268	4	9	305	41	99	28	16	184	12	93	2	9	116	20	56	24	8	108	713
08:15 AM	18	264	8	19	309	33	86	20	12	151	16	85	5	13	119	21	63	18	11	113	692
08:30 AM	22	221	10	11	264	31	94	14	11	150	17	105	4	9	135	30	59	11	10	110	659
08:45 AM	19	221	5	4	249	29	103	7	7	146	25	110	6	4	145	27	61	15	11	114	654
Total	83	974	27	43	1127	134	382	69	46	631	70	393	17	35	515	98	239	68	40	445	2718
Grand Total	160	1885	46	73	2164	269	835	154	97	1355	125	765	51	77	1018	174	584	154	83	995	5532
Apprch %	7.4	87.1	2.1	3.4		19.9	61.6	11.4	7.2		12.3	75.1	5	7.6		17.5	58.7	15.5	8.3		
Total %	2.9	34.1	0.8	1.3	39.1	4.9	15.1	2.8	1.8	24.5	2.3	13.8	0.9	1.4	18.4	3.1	10.6	2.8	1.5	18	
Passenger Vehicles		1842																			
% Passenger Vehicles	96.9	97.7	95.7	98.6	97.6	96.7	95.4	98.1	100	96.3	97.6	94.2	90.2	96.1	94.6	97.1	96.2	98.7	100	97.1	96.7
Large 2 Axle Vehicles																					
% Large 2 Axle Vehicles	1.9	1.4	4.3	1.4	1.5	2.6	3.8	1.9	0	3.1	2.4	3.8	2	2.6	3.4	1.7	2.7	1.3	0	2.1	2.3
3 Axle Vehicles	1	5	0	0	6	1	2	0	0	3	0	5	3	0	8	2	4	0	0	6	23
% 3 Axle Vehicles	0.6	0.3	0	0	0.3	0.4	0.2	0	0	0.2	0	0.7	5.9	0	0.8	1.1	0.7	0	0	0.6	0.4
4+ Axle Trucks	1	12	0	0	13	1	4	0	0	5	0	10	1	1	12	0	2	0	0	2	32
% 4+ Axle Trucks																					

	Haven Avenue Southbound					Baseline Road Westbound					Haven Avenue Northbound					Baseline Road Eastbound					
Start Time	Left	Thru	Right	RoR	App. Total	Left	Thru	Right	RoR	App. Total	Left	Thru	Right	RoR	App. Total	Left	Thru	Right	RoR	App. Total	Int. Total
Peak Hour Analysis From 07:00 AM to 08:45 AM - Peak 1 of 1																					
Peak Hour for Entire Intersection Begins at 07:15 AM																					
07:15 AM	20	218	**6**	7	251	35	112	20	12	179	**18**	84	**10**	**21**	133	20	**99**	15	11	145	708
07:30 AM	18	236	2	**10**	266	**42**	**124**	23	11	**200**	18	**116**	7	9	**150**	15	87	28	9	139	755
07:45 AM	**25**	**297**	6	9	**337**	38	103	15	**17**	173	15	89	5	5	114	**23**	80	**29**	**15**	**147**	**771**
08:00 AM	24	268	4	9	305	41	99	**28**	16	184	12	93	2	9	116	20	56	24	8	108	713
Total Volume	87	1019	18	35	1159	156	438	86	56	736	63	382	24	44	513	78	322	96	43	539	2947
% App. Total	7.5	87.9	1.6	3		21.2	59.5	11.7	7.6		12.3	74.5	4.7	8.6		14.5	59.7	17.8	8		
PHF	.870	.858	.750	.875	.860	.929	.883	.768	.824	.920	.875	.823	.600	.524	.855	.848	.813	.828	.717	.917	.956

Counts Unlimited Inc.
25286 Jaclyn Avenue
Moreno Valley, CA 92557
951-485-7934

City of Rancho Cucamonga
N/S: Haven Avenue
E/W: Baseline Road
Weather: Sunny

File Name : RNCHABAAM
Site Code : 9150075
Start Date : 6/2/2009
Page No : 2

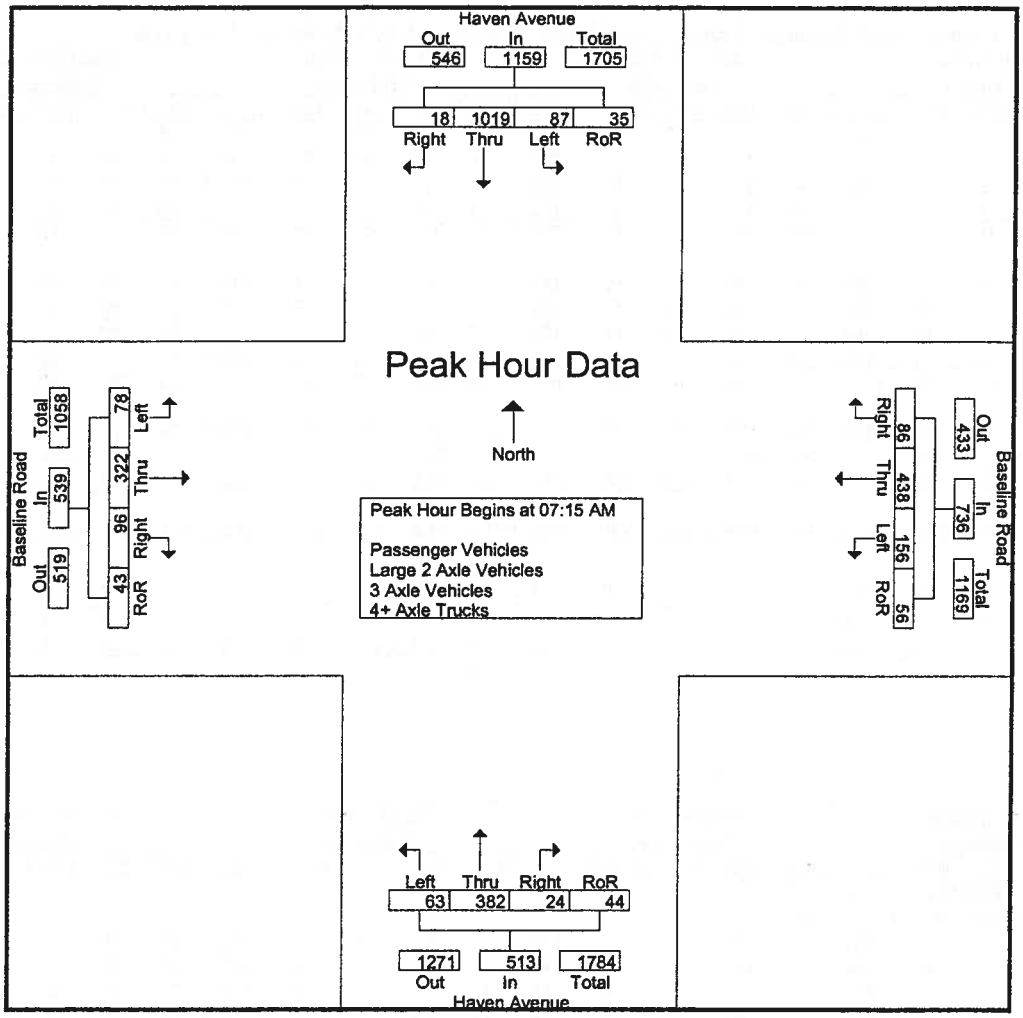

Peak Hour Analysis From 07:00 AM to 08:45 AM - Peak 1 of 1

Peak Hour for Each Approach Begins at:

	07:30 AM					07:15 AM					08:00 AM					07:00 AM				
+0 mins.	18	236	2	10	266	35	112	20	12	179	12	93	2	9	116	18	79	14	8	119
+15 mins.	25	297	6	9	337	42	124	23	11	200	16	85	5	13	119	20	99	15	11	145
+30 mins.	24	268	4	9	305	38	103	15	17	173	17	105	4	9	135	15	87	28	9	139
+45 mins.	18	264	8	19	309	41	99	28	16	184	25	110	6	4	145	23	80	29	15	147
Total Volume	85	1065	20	47	1217	156	438	86	56	736	70	393	17	35	515	76	345	86	43	550
% App. Total	7	87.5	1.6	3.9		21.2	59.5	11.7	7.6		13.6	76.3	3.3	6.8		13.8	62.7	15.6	7.8	
PHF	.850	.896	.625	.618	.903	.929	.883	.768	.824	.920	.700	.893	.708	.673	.888	.826	.871	.741	.717	.935

Counts Unlimited Inc.
25286 Jaclyn Avenue
Moreno Valley, CA 92557
951-485-7934

City of Rancho Cucamonga
N/S: Haven Avenue
E/W: Baseline Road
Weather: Sunny

File Name : RNCHABAAM
Site Code : 9150075
Start Date : 6/2/2009
Page No : 1

Groups Printed- Passenger Vehicles

	Haven Avenue Southbound					Baseline Road Westbound					Haven Avenue Northbound					Baseline Road Eastbound					
Start Time	Left	Thru	Right	RoR	App. Total	Left	Thru	Right	RoR	App. Total	Left	Thru	Right	RoR	App. Total	Left	Thru	Right	RoR	App. Total	Int. Total
07:00 AM	13	155	5	4	177	19	108	27	11	165	4	76	12	5	97	18	77	14	8	117	556
07:15 AM	18	211	6	7	242	34	109	19	12	174	17	76	9	21	123	20	97	15	11	143	682
07:30 AM	18	235	2	10	265	40	122	23	11	196	18	114	7	9	148	15	82	27	9	133	742
07:45 AM	25	291	5	9	330	37	95	15	17	164	15	82	4	5	106	22	75	29	15	141	741
Total	74	892	18	30	1014	130	434	84	51	699	54	348	32	40	474	75	331	85	43	534	2721
08:00 AM	23	262	4	9	298	40	94	28	16	178	11	89	1	9	110	19	54	23	8	104	690
08:15 AM	18	257	8	18	301	32	81	18	12	143	15	81	5	12	113	20	61	18	11	110	667
08:30 AM	21	217	9	11	258	31	89	14	11	145	17	97	3	9	126	30	56	11	10	107	636
08:45 AM	19	214	5	4	242	27	99	7	7	140	25	106	5	4	140	25	60	15	11	111	633
Total	81	950	26	42	1099	130	363	67	46	606	68	373	14	34	489	94	231	67	40	432	2626
Grand Total	155	1842	44	72	2113	260	797	151	97	1305	122	721	46	74	963	169	562	152	83	966	5347
Apprch %	7.3	87.2	2.1	3.4		19.9	61.1	11.6	7.4		12.7	74.9	4.8	7.7		17.5	58.2	15.7	8.6		
Total %	2.9	34.4	0.8	1.3	39.5	4.9	14.9	2.8	1.8	24.4	2.3	13.5	0.9	1.4	18	3.2	10.5	2.8	1.6	18.1	

	Haven Avenue Southbound					Baseline Road Westbound					Haven Avenue Northbound					Baseline Road Eastbound					
Start Time	Left	Thru	Right	RoR	App. Total		Thru	Right	RoR	App. Total		Thru	Right	RoR	App. Total		Thru	Right	RoR	App. Total	Int. Total
Peak Hour Analysis From 07:15 AM to 08:00 AM - Peak 1 of 1																					
Peak Hour for Entire Intersection Begins at 07:15 AM																					
07:15 AM	18	211	**6**	7	242	34	109	19	12	174	17	76	**9**	**21**	123	20	**97**	15	11	**143**	682
07:30 AM	18	235	2	**10**	265	**40**	**122**	23	11	**196**	**18**	**114**	7	9	**148**	15	82	27	9	133	**742**
07:45 AM	**25**	**291**	5	9	**330**	37	95	15	**17**	164	15	82	4	5	106	**22**	75	**29**	**15**	141	741
08:00 AM	23	262	4	9	298	40	94	**28**	16	178	11	89	1	9	110	19	54	23	8	104	690
Total Volume	84	999	17	35	1135	151	420	85	56	712	61	361	21	44	487	76	308	94	43	521	2855
% App. Total	7.4	88	1.5	3.1		21.2	59	11.9	7.9		12.5	74.1	4.3	9		14.6	59.1	18	8.3		
PHF	.840	.858	.708	.875	.860	.944	.861	.759	.824	.908	.847	.792	.583	.524	.823	.864	.794	.810	.717	.911	.962

Counts Unlimited Inc.
25286 Jaclyn Avenue
Moreno Valley, CA 92557
951-485-7934

City of Rancho Cucamonga
N/S: Haven Avenue
E/W: Baseline Road
Weather: Sunny

File Name : RNCHABAAM
Site Code : 9150075
Start Date : 6/2/2009
Page No : 2

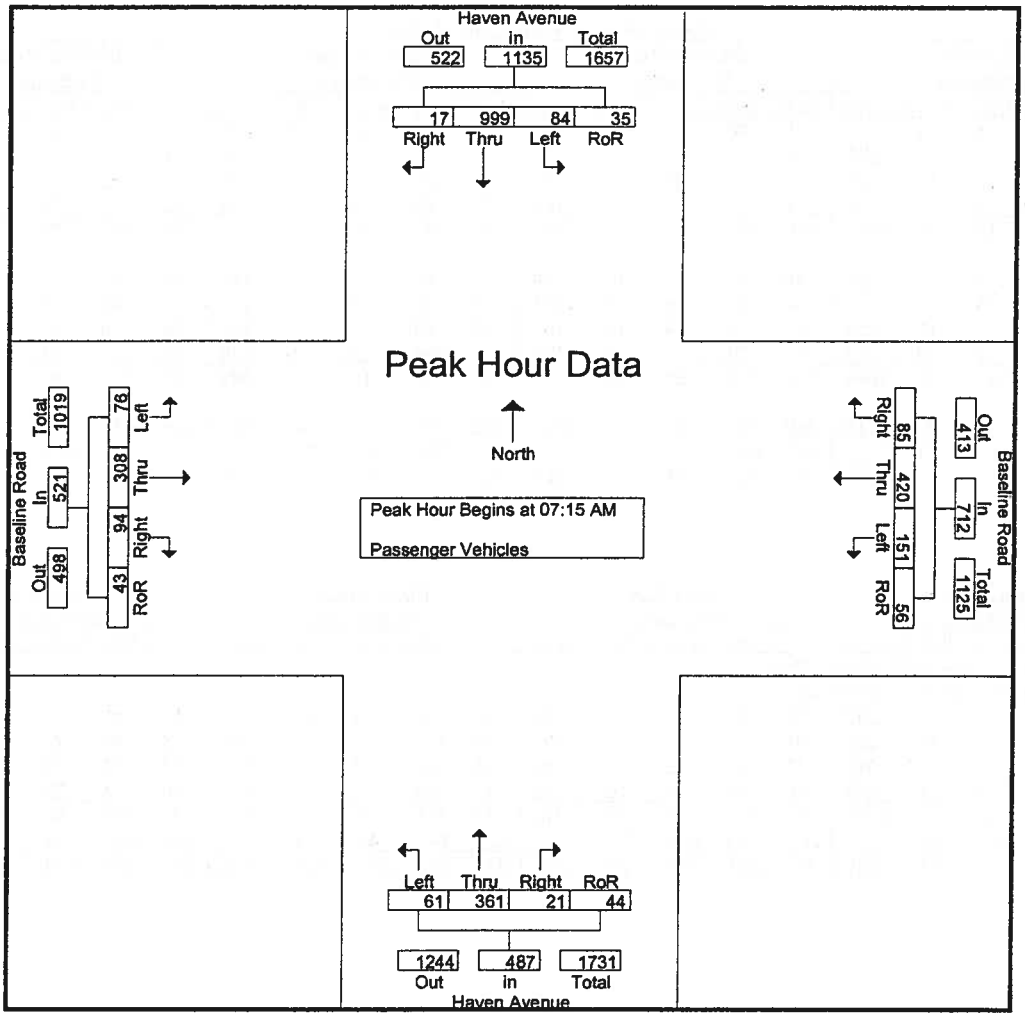

Peak Hour Analysis From 07:15 AM to 08:00 AM - Peak 1 of 1

Peak Hour for Each Approach Begins at:

	07:15 AM					07:15 AM					07:15 AM					07:15 AM				
+0 mins.	18	211	6	7	242	34	109	19	12	174	17	76	9	21	123	20	97	15	11	143
+15 mins.	18	235	2	10	265	40	122	23	11	196	18	114	7	9	148	15	82	27	9	133
+30 mins.	25	291	5	9	330	37	95	15	17	164	15	82	4	5	106	22	75	29	15	141
+45 mins.	23	262	4	9	298	40	94	28	16	178	11	89	1	9	110	19	54	23	8	104
Total Volume	84	999	17	35	1135	151	420	85	56	712	61	361	21	44	487	76	308	94	43	521
% App. Total	7.4	88	1.5	3.1		21.2	59	11.9	7.9		12.5	74.1	4.3	9		14.6	59.1	18	8.3	
PHF	.840	.858	.708	.875	.860	.944	.861	.759	.824	.908	.847	.792	.583	.524	.823	.864	.794	.810	.717	.911

Counts Unlimited Inc.
25286 Jaclyn Avenue
Moreno Valley, CA 92557
951-485-7934

City of Rancho Cucamonga
N/S: Haven Avenue
E/W: Baseline Road
Weather: Sunny

File Name : RNCHABAAM
Site Code : 9150075
Start Date : 6/2/2009
Page No : 1

Groups Printed- Large 2 Axle Vehicles

	Haven Avenue Southbound					Baseline Road Westbound					Haven Avenue Northbound					Baseline Road Eastbound					
Start Time	Left	Thru	Right	RoR	App. Total	Left	Thru	Right	RoR	App. Total	Left	Thru	Right	RoR	App. Total	Left	Thru	Right	RoR	App. Total	Int. Total
07:00 AM	0	2	0	0	2	1	3	0	0	4	0	6	0	1	7	0	2	0	0	2	15
07:15 AM	2	6	0	0	8	0	3	1	0	4	1	5	0	0	6	0	1	0	0	1	19
07:30 AM	0	1	0	0	1	1	2	0	0	3	0	0	0	0	0	0	3	1	0	4	8
07:45 AM	0	2	1	0	3	1	6	0	0	7	0	3	0	0	3	1	5	0	0	6	19
Total	2	11	1	0	14	3	14	1	0	18	1	14	0	1	16	1	11	1	0	13	61
08:00 AM	0	4	0	0	4	1	5	0	0	6	1	4	0	0	5	0	0	1	0	1	16
08:15 AM	0	5	0	1	6	1	5	2	0	8	1	3	0	1	5	1	2	0	0	3	22
08:30 AM	1	2	1	0	4	0	4	0	0	4	0	5	0	0	5	0	2	0	0	2	15
08:45 AM	0	4	0	0	4	2	4	0	0	6	0	3	1	0	4	1	1	0	0	2	16
Total	1	15	1	1	18	4	18	2	0	24	2	15	1	1	19	2	5	1	0	8	69
Grand Total	3	26	2	1	32	7	32	3	0	42	3	29	1	2	35	3	16	2	0	21	130
Apprch %	9.4	81.2	6.2	3.1		16.7	76.2	7.1	0		8.6	82.9	2.9	5.7		14.3	76.2	9.5	0		
Total %	2.3	20	1.5	0.8	24.6	5.4	24.6	2.3	0	32.3	2.3	22.3	0.8	1.5	26.9	2.3	12.3	1.5	0	16.2	

	Haven Avenue Southbound					Baseline Road Westbound					Haven Avenue Northbound					Baseline Road Eastbound					
Start Time	Left	Thru	Right	RoR	App. Total		Thru	Right	RoR	App. Total		Thru	Right	RoR	App. Total		Thru	Right	RoR	App. Total	Int. Total
Peak Hour Analysis From 07:15 AM to 08:00 AM - Peak 1 of 1																					
Peak Hour for Entire Intersection Begins at 07:15 AM																					
07:15 AM	**2**	**6**	0	0	**8**	0	3	**1**	0	4	**1**	**5**	0	0	**6**	0	**1**	0	0	**1**	**19**
07:30 AM	0	1	0	0	1	**1**	2	0	0	3	0	0	0	0	0	0	3	**1**	0	4	8
07:45 AM	0	2	1	0	3	1	**6**	0	0	**7**	0	3	0	0	3	**1**	**5**	0	0	**6**	19
08:00 AM	0	4	0	0	4	1	5	0	0	6	1	4	0	0	5	0	0	1	0	1	16
Total Volume	2	13	1	0	16	3	16	1	0	20	2	12	0	0	14	1	9	2	0	12	62
% App. Total	12.5	81.2	6.2	0		15	80	5	0		14.3	85.7	0	0		8.3	75	16.7	0		
PHF	.250	.542	.250	.000	.500	.750	.667	.250	.000	.714	.500	.600	.000	.000	.583	.250	.450	.500	.000	.500	.816

Counts Unlimited Inc.
25286 Jaclyn Avenue
Moreno Valley, CA 92557
951-485-7934

City of Rancho Cucamonga
N/S: Haven Avenue
E/W: Baseline Road
Weather: Sunny

File Name : RNCHABAAM
Site Code : 9150075
Start Date : 6/2/2009
Page No : 2

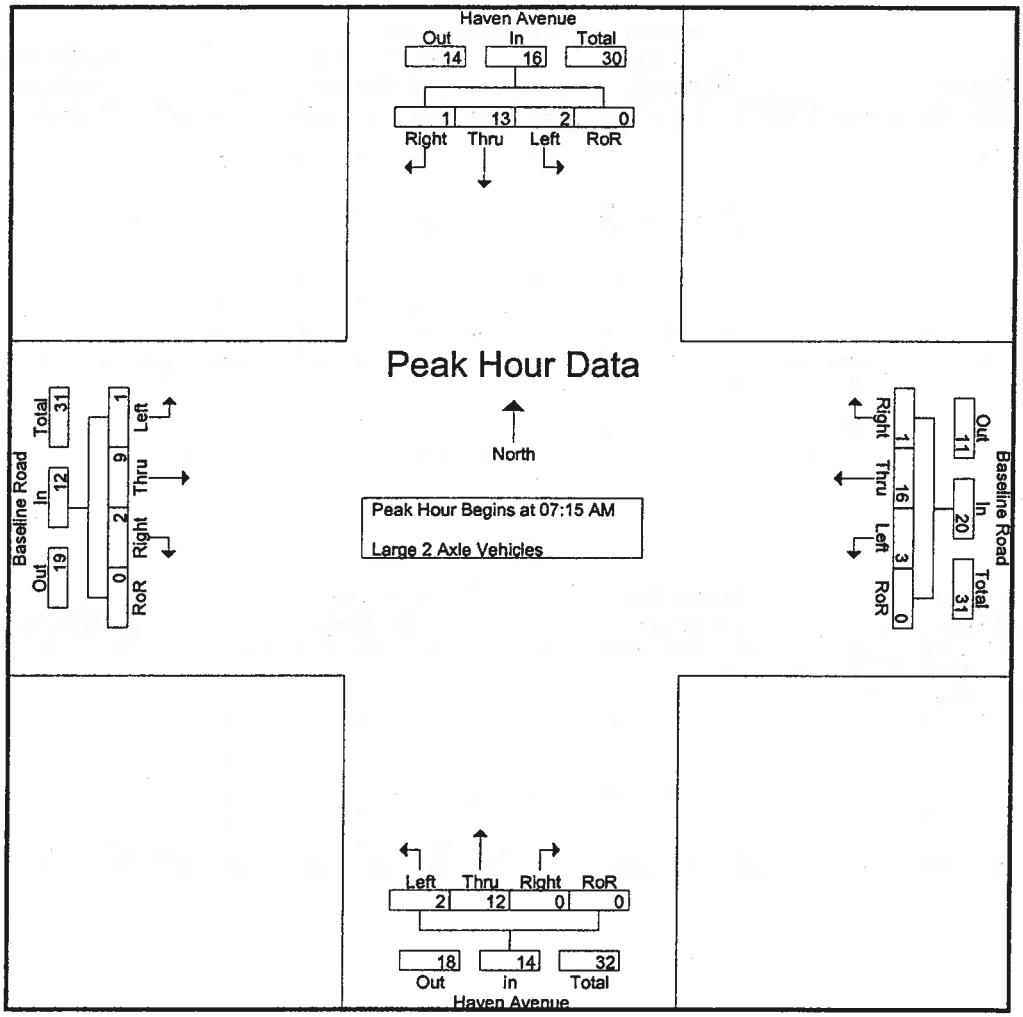

Peak Hour Analysis From 07:15 AM to 08:00 AM - Peak 1 of 1

Peak Hour for Each Approach Begins at:

	07:15 AM					07:15 AM					07:15 AM					07:15 AM				
+0 mins.	2	6	0	0	8	0	3	1	0	4	1	5	0	0	6	0	1	0	0	1
+15 mins.	0	1	0	0	1	1	2	0	0	3	0	0	0	0	0	0	3	1	0	4
+30 mins.	0	2	1	0	3	1	6	0	0	7	0	3	0	0	3	1	5	0	0	6
+45 mins.	0	4	0	0	4	1	5	0	0	6	1	4	0	0	5	0	0	1	0	1
Total Volume	2	13	1	0	16	3	16	1	0	20	2	12	0	0	14	1	9	2	0	12
% App. Total	12.5	81.2	6.2	0		15	80	5	0		14.3	85.7	0	0		8.3	75	16.7	0	
PHF	.250	.542	.250	.000	.500	.750	.667	.250	.000	.714	.500	.600	.000	.000	.583	.250	.450	.500	.000	.500

Counts Unlimited Inc.
25286 Jaclyn Avenue
Moreno Valley, CA 92557
951-485-7934

City of Rancho Cucamonga
N/S: Haven Avenue
E/W: Baseline Road
Weather: Sunny

File Name : RNCHABAAM
Site Code : 9150075
Start Date : 6/2/2009
Page No : 1

Groups Printed- 3 Axle Vehicles

	Haven Avenue Southbound					Baseline Road Westbound					Haven Avenue Northbound					Baseline Road Eastbound					
Start Time	Left	Thru	Right	RoR	App. Total	Left	Thru	Right	RoR	App. Total	Left	Thru	Right	RoR	App. Total	Left	Thru	Right	RoR	App. Total	Int. Total
07:00 AM	1	0	0	0	1	0	0	0	0	0	0	0	0	0	0	0	0	0	0	0	1
07:15 AM	0	1	0	0	1	0	0	0	0	0	0	1	1	0	2	0	0	0	0	0	3
07:30 AM	0	0	0	0	0	1	0	0	0	1	0	1	0	0	1	0	2	0	0	2	4
07:45 AM	0	1	0	0	1	0	2	0	0	2	0	1	0	0	1	0	0	0	0	0	4
Total	1	2	0	0	3	1	2	0	0	3	0	3	1	0	4	0	2	0	0	2	12
08:00 AM	0	1	0	0	1	0	0	0	0	0	0	0	1	0	1	1	1	0	0	2	4
08:15 AM	0	0	0	0	0	0	0	0	0	0	0	0	0	0	0	0	0	0	0	0	0
08:30 AM	0	0	0	0	0	0	0	0	0	0	0	2	1	0	3	0	1	0	0	1	4
08:45 AM	0	2	0	0	2	0	0	0	0	0	0	0	0	0	0	1	0	0	0	1	3
Total	0	3	0	0	3	0	0	0	0	0	0	2	2	0	4	2	2	0	0	4	11
Grand Total	1	5	0	0	6	1	2	0	0	3	0	5	3	0	8	2	4	0	0	6	23
Apprch %	16.7	83.3	0	0		33.3	66.7	0	0		0	62.5	37.5	0		33.3	66.7	0	0		
Total %	4.3	21.7	0	0	26.1	4.3	8.7	0	0	13	0	21.7	13	0	34.8	8.7	17.4	0	0	26.1	

	Haven Avenue Southbound					Baseline Road Westbound					Haven Avenue Northbound					Baseline Road Eastbound					
Start Time	Left	Thru	Right	RoR	App. Total		Thru	Right	RoR	App. Total		Thru	Right	RoR	App. Total		Thru	Right	RoR	App. Total	Int. Total
Peak Hour Analysis From 07:15 AM to 08:00 AM - Peak 1 of 1																					
Peak Hour for Entire Intersection Begins at 07:15 AM																					
07:15 AM	0	1	0	0	1	0	0	0	0	0	0	1	1	0	2	0	0	0	0	0	3
07:30 AM	0	0	0	0	0	1	0	0	0	1	0	1	0	0	1	0	2	0	0	2	4
07:45 AM	0	1	0	0	1	0	2	0	0	2	0	1	0	0	1	0	0	0	0	0	4
08:00 AM	0	1	0	0	1	0	0	0	0	0	0	0	1	0	1	1	1	0	0	2	4
Total Volume	0	3	0	0	3	1	2	0	0	3	0	3	2	0	5	1	3	0	0	4	15
% App. Total	0	100	0	0		33.3	66.7	0	0		0	60	40	0		25	75	0	0		
PHF	.000	.750	.000	.000	.750	.250	.250	.000	.000	.375	.000	.750	.500	.000	.625	.250	.375	.000	.000	.500	.938

Counts Unlimited Inc.
25286 Jaclyn Avenue
Moreno Valley, CA 92557
951-485-7934

City of Rancho Cucamonga
N/S: Haven Avenue
E/W: Baseline Road
Weather: Sunny

File Name : RNCHABAAM
Site Code : 9150075
Start Date : 6/2/2009
Page No : 2

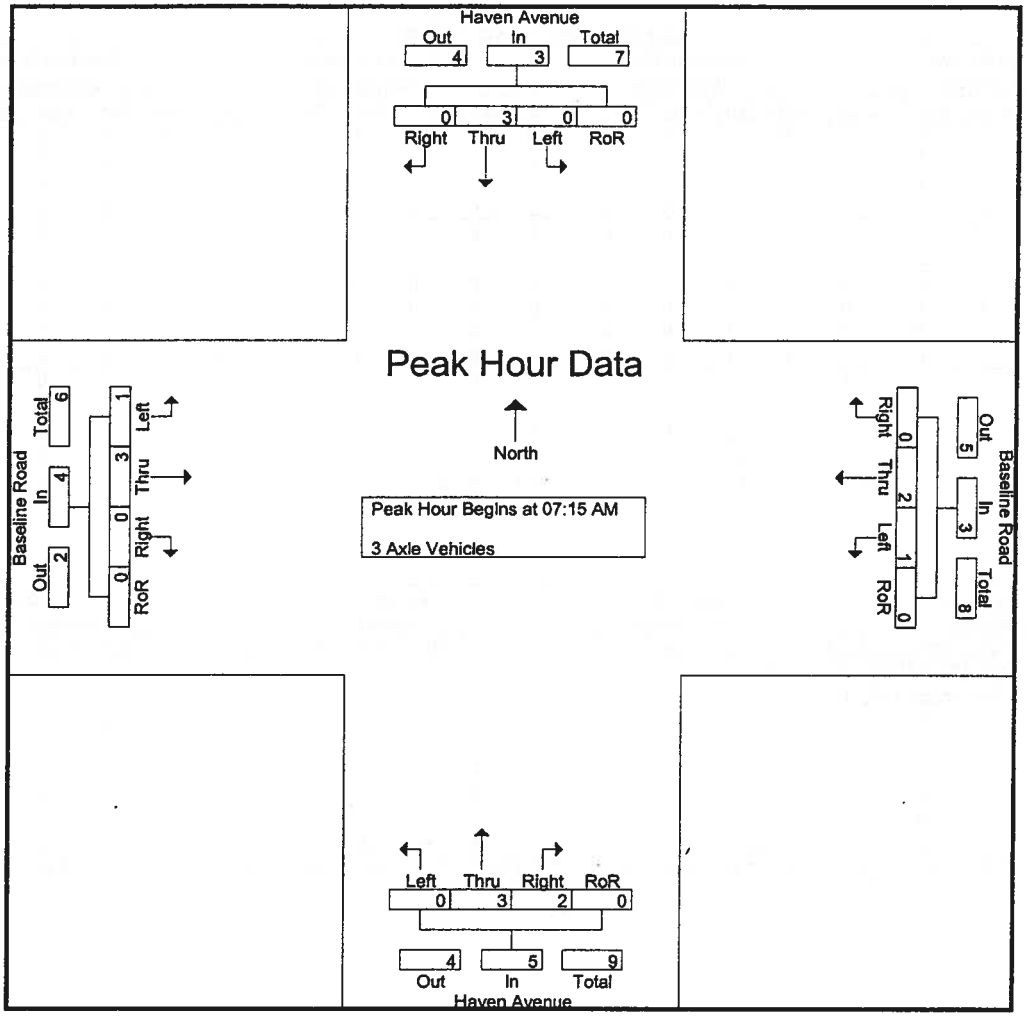

Peak Hour Analysis From 07:15 AM to 08:00 AM - Peak 1 of 1

Peak Hour for Each Approach Begins at:

	07:15 AM					07:15 AM					07:15 AM					07:15 AM				
+0 mins.	0	1	0	0	1	0	0	0	0	0	0	1	1	0	2	0	0	0	0	0
+15 mins.	0	0	0	0	0	1	0	0	0	1	0	1	0	0	1	0	2	0	0	2
+30 mins.	0	1	0	0	1	0	2	0	0	2	0	1	0	0	1	0	0	0	0	0
+45 mins.	0	1	0	0	1	0	0	0	0	0	0	0	1	0	1	1	1	0	0	2
Total Volume	0	3	0	0	3	1	2	0	0	3	0	3	2	0	5	1	3	0	0	4
% App. Total	0	100	0	0		33.3	66.7	0	0		0	60	40	0		25	75	0	0	
PHF	.000	.750	.000	.000	.750	.250	.250	.000	.000	.375	.000	.750	.500	.000	.625	.250	.375	.000	.000	.500

Counts Unlimited Inc.
25286 Jaclyn Avenue
Moreno Valley, CA 92557
951-485-7934

City of Rancho Cucamonga
N/S: Haven Avenue
E/W: Baseline Road
Weather: Sunny

File Name : RNCHABAAM
Site Code : 9150075
Start Date : 6/2/2009
Page No : 1

Groups Printed- 4+ Axle Trucks

	Haven Avenue Southbound					Baseline Road Westbound					Haven Avenue Northbound					Baseline Road Eastbound					
Start Time	Left	Thru	Right	RoR	App. Total	Left	Thru	Right	RoR	App. Total	Left	Thru	Right	RoR	App. Total	Left	Thru	Right	RoR	App. Total	Int. Total
07:00 AM	0	3	0	0	3	0	3	0	0	3	0	1	0	1	2	0	0	0	0	0	8
07:15 AM	0	0	0	0	0	1	0	0	0	1	0	2	0	0	2	0	1	0	0	1	4
07:30 AM	0	0	0	0	0	0	0	0	0	0	0	1	0	0	1	0	0	0	0	0	1
07:45 AM	0	3	0	0	3	0	0	0	0	0	0	3	1	0	4	0	0	0	0	0	7
Total	0	6	0	0	6	1	3	0	0	4	0	7	1	1	9	0	1	0	0	1	20
08:00 AM	1	1	0	0	2	0	0	0	0	0	0	0	0	0	0	0	1	0	0	1	3
08:15 AM	0	2	0	0	2	0	0	0	0	0	0	1	0	0	1	0	0	0	0	0	3
08:30 AM	0	2	0	0	2	0	1	0	0	1	0	1	0	0	1	0	0	0	0	0	4
08:45 AM	0	1	0	0	1	0	0	0	0	0	0	1	0	0	1	0	0	0	0	0	2
Total	1	6	0	0	7	0	1	0	0	1	0	3	0	0	3	0	1	0	0	1	12
Grand Total	1	12	0	0	13	1	4	0	0	5	0	10	1	1	12	0	2	0	0	2	32
Apprch %	7.7	92.3	0	0		20	80	0	0		0	83.3	8.3	8.3		0	100	0	0		
Total %	3.1	37.5	0	0	40.6	3.1	12.5	0	0	15.6	0	31.2	3.1	3.1	37.5	0	6.2	0	0	6.2	

	Haven Avenue Southbound					Baseline Road Westbound					Haven Avenue Northbound					Baseline Road Eastbound					
Start Time	Left	Thru	Right	RoR	App. Total		Thru	Right	RoR	App. Total		Thru	Right	RoR	App. Total		Thru	Right	RoR	App. Total	Int. Total
Peak Hour Analysis From 07:15 AM to 08:00 AM - Peak 1 of 1																					
Peak Hour for Entire Intersection Begins at 07:15 AM																					
07:15 AM	0	0	0	0	0	1	0	0	0	1	0	2	0	0	2	0	1	0	0	1	4
07:30 AM	0	0	0	0	0	0	0	0	0	0	0	1	0	0	1	0	0	0	0	0	1
07:45 AM	0	3	0	0	3	0	0	0	0	0	0	3	1	0	4	0	0	0	0	0	7
08:00 AM	1	1	0	0	2	0	0	0	0	0	0	0	0	0	0	0	1	0	0	1	3
Total Volume	1	4	0	0	5	1	0	0	0	1	0	6	1	0	7	0	2	0	0	2	15
% App. Total	20	80	0	0		100	0	0	0		0	85.7	14.3	0		0	100	0	0		
PHF	.250	.333	.000	.000	.417	.250	.000	.000	.000	.250	.000	.500	.250	.000	.438	.000	.500	.000	.000	.500	.536

Counts Unlimited Inc.
25286 Jaclyn Avenue
Moreno Valley, CA 92557
951-485-7934

City of Rancho Cucamonga
N/S: Haven Avenue
E/W: Baseline Road
Weather: Sunny

File Name : RNCHABAAM
Site Code : 9150075
Start Date : 6/2/2009
Page No : 2

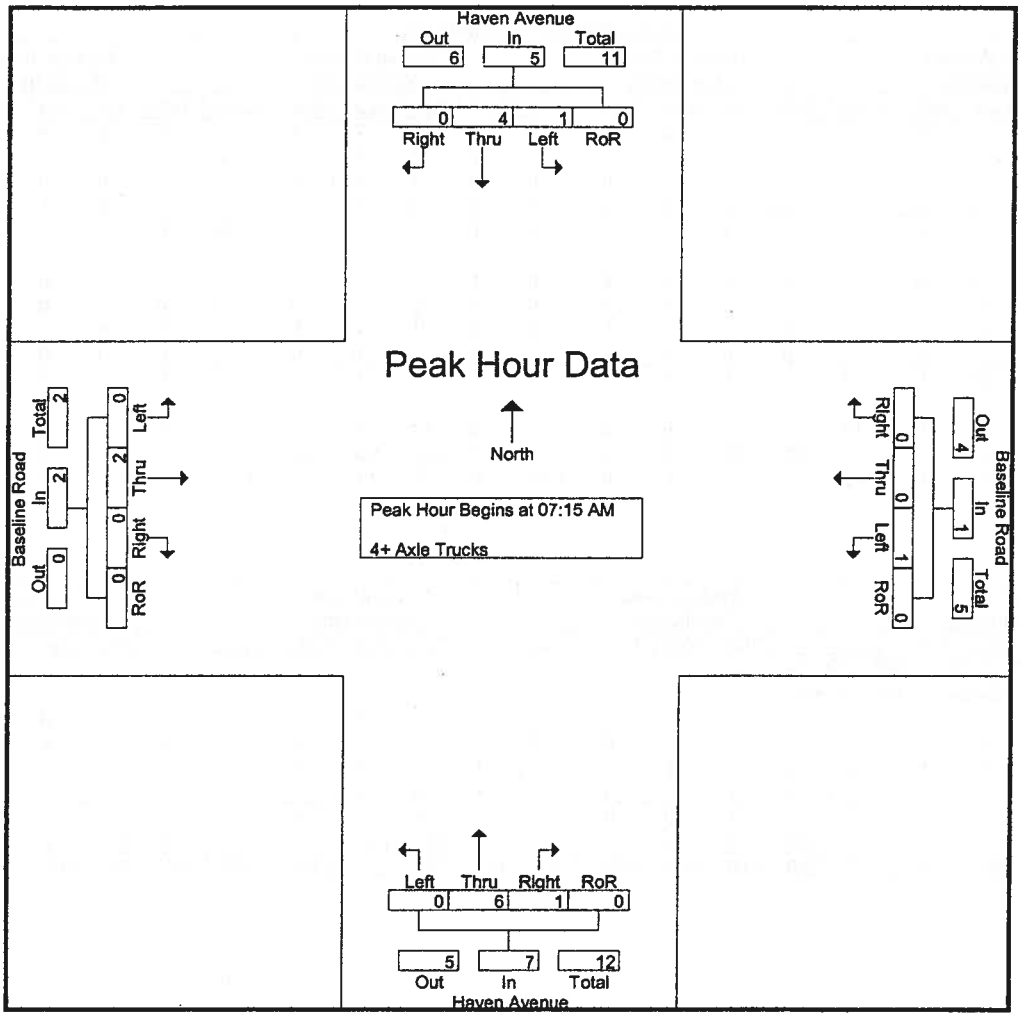

Peak Hour Analysis From 07:15 AM to 08:00 AM - Peak 1 of 1

Peak Hour for Each Approach Begins at:

	07:15 AM					07:15 AM					07:15 AM					07:15 AM				
+0 mins.	0	0	0	0	0	1	0	0	0	1	0	2	0	0	2	0	1	0	0	1
+15 mins.	0	0	0	0	0	0	0	0	0	0	0	1	0	0	1	0	0	0	0	0
+30 mins.	0	3	0	0	3	0	0	0	0	0	0	3	1	0	4	0	0	0	0	0
+45 mins.	1	1	0	0	2	0	0	0	0	0	0	0	0	0	0	0	1	0	0	1
Total Volume	1	4	0	0	5	1	0	0	0	1	0	6	1	0	7	0	2	0	0	2
% App. Total	20	80	0	0		100	0	0	0		0	85.7	14.3	0		0	100	0	0	
PHF	.250	.333	.000	.000	.417	.250	.000	.000	.000	.250	.000	.500	.250	.000	.438	.000	.500	.000	.000	.500

Counts Unlimited Inc.
25286 Jaclyn Avenue
Moreno Valley, CA 92557
951-485-7934

City of Rancho Cucamonga
N/S: Haven Avenue
E/W: Baseline Road
Weather: Sunny

File Name : RNCHABAPM
Site Code : 9150075
Start Date : 6/2/2009
Page No : 1

Groups Printed- Passenger Vehicles - Large 2 Axle Vehicles - 3 Axle Vehicles - 4+ Axle Trucks

	Haven Avenue Southbound					Baseline Road Westbound					Haven Avenue Northbound					Baseline Road Eastbound					
Start Time	Left	Thru	Right	RoR	App. Total	Left	Thru	Right	RoR	App. Total	Left	Thru	Right	RoR	App. Total	Left	Thru	Right	RoR	App. Total	Int. Total
04:00 PM	42	150	4	13	209	30	101	15	12	158	62	277	10	17	366	38	125	12	16	191	924
04:15 PM	51	169	3	8	231	26	97	26	10	159	52	252	12	29	345	33	134	10	12	189	924
04:30 PM	34	144	11	8	197	29	132	19	19	199	68	302	10	17	397	27	117	10	13	167	960
04:45 PM	48	197	11	4	260	36	115	25	12	188	61	278	7	18	364	46	116	18	17	197	1009
Total	175	660	29	33	897	121	445	85	53	704	243	1109	39	81	1472	144	492	50	58	744	3817
05:00 PM	29	155	4	0	188	28	91	23	12	154	59	367	11	23	460	37	147	10	13	207	1009
05:15 PM	54	134	5	4	197	39	121	21	15	196	68	336	11	31	446	43	151	8	18	220	1059
05:30 PM	46	145	6	7	204	42	109	25	18	194	73	301	17	18	409	51	160	14	15	240	1047
05:45 PM	57	167	16	4	244	40	129	18	26	213	69	256	16	32	373	37	140	12	13	202	1032
Total	186	601	31	15	833	149	450	87	71	757	269	1260	55	104	1688	168	598	44	59	869	4147
Grand Total	361	1261	60	48	1730	270	895	172	124	1461	512	2369	94	185	3160	312	1090	94	117	1613	7964
Apprch %	20.9	72.9	3.5	2.8		18.5	61.3	11.8	8.5		16.2	75	3	5.9		19.3	67.6	5.8	7.3		
Total %	4.5	15.8	0.8	0.6	21.7	3.4	11.2	2.2	1.6	18.3	6.4	29.7	1.2	2.3	39.7	3.9	13.7	1.2	1.5	20.3	
Passenger Vehicles		1242										2353					1076				
% Passenger Vehicles	98.9	98.5	98.3	97.9	98.6	99.6	99.3	99.4	100	99.5	99.6	99.3	96.8	100	99.3	99	98.7	98.9	99.1	98.8	99.1
Large 2 Axle Vehicles																					
% Large 2 Axle Vehicles	1.1	1.1	0	2.1	1.1	0.4	0.4	0.6	0	0.4	0.4	0.5	3.2	0	0.6	1	0.9	1.1	0.9	0.9	0.7
3 Axle Vehicles	0	2	0	0	2	0	2	0	0	2	0	1	0	0	1	0	3	0	0	3	8
% 3 Axle Vehicles	0	0.2	0	0	0.1	0	0.2	0	0	0.1	0	0	0	0	0	0	0.3	0	0	0.2	0.1
4+ Axle Trucks	0	3	1	0	4	0	0	0	0	0	0	2	0	0	2	0	1	0	0	1	7
% 4+ Axle Trucks																					

	Haven Avenue Southbound					Baseline Road Westbound					Haven Avenue Northbound					Baseline Road Eastbound					
Start Time	Left	Thru	Right	RoR	App. Total	Left	Thru	Right	RoR	App. Total	Left	Thru	Right	RoR	App. Total	Left	Thru	Right	RoR	App. Total	Int. Total
Peak Hour Analysis From 04:00 PM to 05:45 PM - Peak 1 of 1																					
Peak Hour for Entire Intersection Begins at 05:00 PM																					
05:00 PM	29	155	4	0	188	28	91	23	12	154	59	**367**	11	23	**460**	37	147	10	13	207	1009
05:15 PM	54	134	5	4	197	39	121	21	15	196	68	336	11	31	446	43	151	8	**18**	220	**1059**
05:30 PM	46	145	6	**7**	204	**42**	109	**25**	18	194	**73**	301	**17**	18	409	**51**	**160**	**14**	15	**240**	1047
05:45 PM	**57**	**167**	**16**	4	**244**	40	**129**	18	**26**	**213**	69	256	16	**32**	373	37	140	12	13	202	1032
Total Volume	186	601	31	15	833	149	450	87	71	757	269	1260	55	104	1688	168	598	44	59	869	4147
% App. Total	22.3	72.1	3.7	1.8		19.7	59.4	11.5	9.4		15.9	74.6	3.3	6.2		19.3	68.8	5.1	6.8		
PHF	.816	.900	.484	.536	.853	.887	.872	.870	.683	.888	.921	.858	.809	.813	.917	.824	.934	.786	.819	.905	.979

Counts Unlimited Inc.
25286 Jaclyn Avenue
Moreno Valley, CA 92557
951-485-7934

City of Rancho Cucamonga
N/S: Haven Avenue
E/W: Baseline Road
Weather: Sunny

File Name : RNCHABAPM
Site Code : 9150075
Start Date : 6/2/2009
Page No : 2

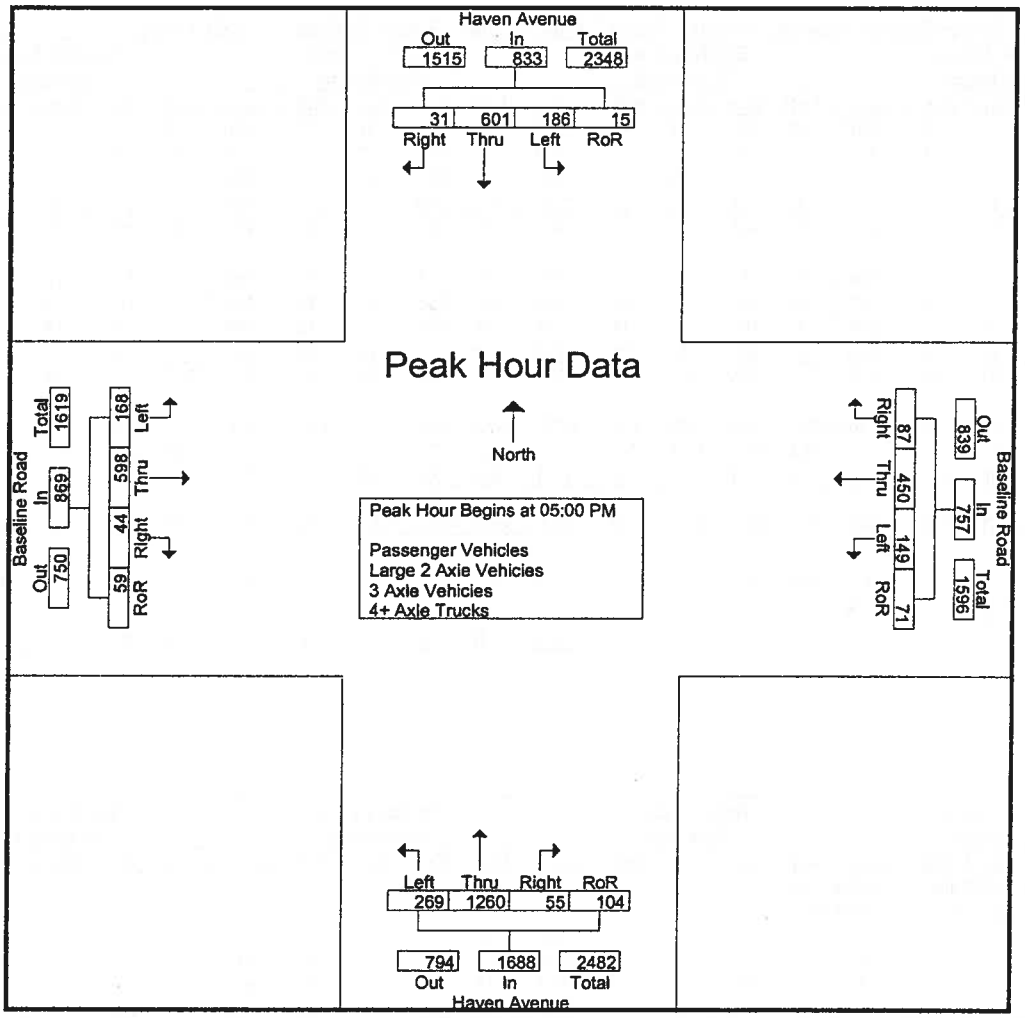

Peak Hour Analysis From 04:00 PM to 05:45 PM - Peak 1 of 1

Peak Hour for Each Approach Begins at:

	04:00 PM					05:00 PM					05:00 PM					05:00 PM				
+0 mins.	42	150	4	13	209	28	91	23	12	154	59	367	11	23	460	37	147	10	13	207
+15 mins.	51	169	3	8	231	39	121	21	15	196	68	336	11	31	446	43	151	8	18	220
+30 mins.	34	144	11	8	197	42	109	25	18	194	73	301	17	18	409	51	160	14	15	240
+45 mins.	48	197	11	4	260	40	129	18	26	213	69	256	16	32	373	37	140	12	13	202
Total Volume	175	660	29	33	897	149	450	87	71	757	269	1260	55	104	1688	168	598	44	59	869
% App. Total	19.5	73.6	3.2	3.7		19.7	59.4	11.5	9.4		15.9	74.6	3.3	6.2		19.3	68.8	5.1	6.8	
PHF	.858	.838	.659	.635	.863	.887	.872	.870	.683	.888	.921	.858	.809	.813	.917	.824	.934	.786	.819	.905

Counts Unlimited Inc.
25286 Jaclyn Avenue
Moreno Valley, CA 92557
951-485-7934

City of Rancho Cucamonga
N/S: Haven Avenue
E/W: Baseline Road
Weather: Sunny

File Name : RNCHABAPM
Site Code : 9150075
Start Date : 6/2/2009
Page No : 1

Groups Printed- Passenger Vehicles

	Haven Avenue Southbound					Baseline Road Westbound					Haven Avenue Northbound					Baseline Road Eastbound					
Start Time	Left	Thru	Right	RoR	App. Total	Left	Thru	Right	RoR	App. Total	Left	Thru	Right	RoR	App. Total	Left	Thru	Right	RoR	App. Total	Int. Total
04:00 PM	42	148	3	13	206	30	101	15	12	158	62	277	10	17	366	37	124	12	16	189	919
04:15 PM	51	165	3	7	226	26	96	26	10	158	52	248	11	29	340	33	130	10	12	185	909
04:30 PM	33	142	11	8	194	29	132	19	19	199	68	302	10	17	397	27	116	10	13	166	956
04:45 PM	47	195	11	4	257	36	114	24	12	186	61	277	6	18	362	45	115	17	17	194	999
Total	173	650	28	32	883	121	443	84	53	701	243	1104	37	81	1465	142	485	49	58	734	3783
05:00 PM	29	153	4	0	186	28	91	23	12	154	58	363	11	23	455	37	144	10	13	204	999
05:15 PM	53	131	5	4	193	39	118	21	15	193	68	335	11	31	445	43	149	8	18	218	1049
05:30 PM	45	144	6	7	202	41	109	25	18	193	73	300	17	18	408	51	159	14	15	239	1042
05:45 PM	57	164	16	4	241	40	128	18	26	212	68	251	15	32	366	36	139	12	12	199	1018
Total	184	592	31	15	822	148	446	87	71	752	267	1249	54	104	1674	167	591	44	58	860	4108
Grand Total	357	1242	59	47	1705	269	889	171	124	1453	510	2353	91	185	3139	309	1076	93	116	1594	7891
Apprch %	20.9	72.8	3.5	2.8		18.5	61.2	11.8	8.5		16.2	75	2.9	5.9		19.4	67.5	5.8	7.3		
Total %	4.5	15.7	0.7	0.6	21.6	3.4	11.3	2.2	1.6	18.4	6.5	29.8	1.2	2.3	39.8	3.9	13.6	1.2	1.5	20.2	

	Haven Avenue Southbound					Baseline Road Westbound					Haven Avenue Northbound					Baseline Road Eastbound					
Start Time	Left	Thru	Right	RoR	App. Total		Thru	Right	RoR	App. Total		Thru	Right	RoR	App. Total		Thru	Right	RoR	App. Total	Int. Total
Peak Hour Analysis From 05:00 PM to 05:45 PM - Peak 1 of 1																					
Peak Hour for Entire Intersection Begins at 05:00 PM																					
05:00 PM	29	153	4	0	186	28	91	23	12	154	58	**363**	11	23	455	37	144	10	13	204	999
05:15 PM	53	131	5	4	193	39	118	21	15	193	68	335	11	31	445	43	149	8	**18**	218	**1049**
05:30 PM	45	144	6	7	202	**41**	109	**25**	18	193	**73**	300	17	18	408	**51**	**159**	**14**	15	**239**	1042
05:45 PM	**57**	**164**	**16**	4	**241**	40	**128**	18	**26**	**212**	68	251	15	**32**	366	36	139	12	12	199	1018
Total Volume	184	592	31	15	822	148	446	87	71	752	267	1249	54	104	1674	167	591	44	58	860	4108
% App. Total	22.4	72	3.8	1.8		19.7	59.3	11.6	9.4		15.9	74.6	3.2	6.2		19.4	68.7	5.1	6.7		
PHF	.807	.902	.484	.536	.853	.902	.871	.870	.683	.887	.914	.860	.794	.813	.920	.819	.929	.786	.806	.900	.979

Counts Unlimited Inc.
25286 Jaclyn Avenue
Moreno Valley, CA 92557
951-485-7934

City of Rancho Cucamonga
N/S: Haven Avenue
E/W: Baseline Road
Weather: Sunny

File Name : RNCHABAPM
Site Code : 9150075
Start Date : 6/2/2009
Page No : 2

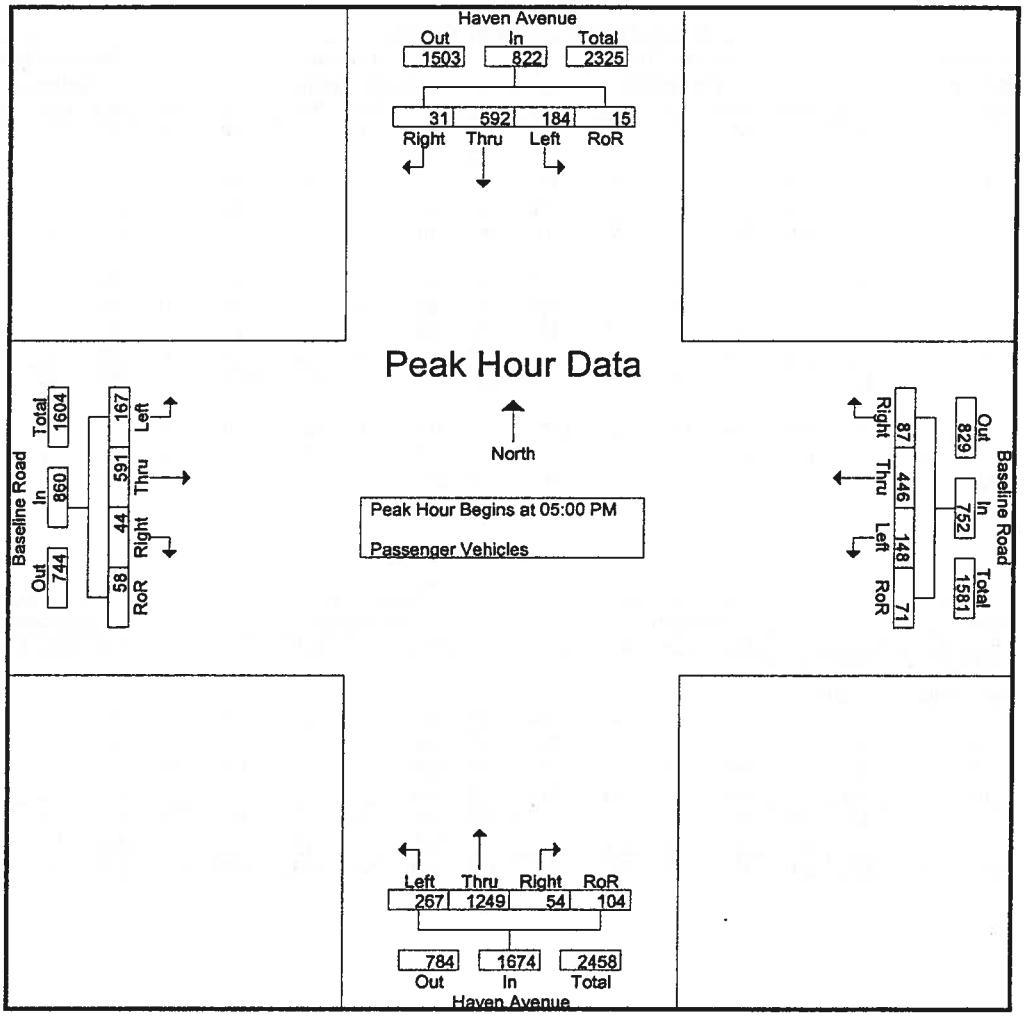

Peak Hour Analysis From 05:00 PM to 05:45 PM - Peak 1 of 1

Peak Hour for Each Approach Begins at:

	05:00 PM					05:00 PM					05:00 PM					05:00 PM				
+0 mins.	29	153	4	0	186	28	91	23	12	154	58	**363**	11	23	**455**	37	144	10	13	204
+15 mins.	53	131	5	4	193	39	118	21	15	193	68	335	11	31	445	43	149	8	**18**	218
+30 mins.	45	144	6	7	202	**41**	109	**25**	18	193	**73**	300	**17**	18	408	**51**	**159**	**14**	15	**239**
+45 mins.	**57**	**164**	**16**	4	**241**	40	**128**	18	**26**	**212**	68	251	15	**32**	366	36	139	12	12	199
Total Volume	184	592	31	15	822	148	446	87	71	752	267	1249	54	104	1674	167	591	44	58	860
% App. Total	22.4	72	3.8	1.8		19.7	59.3	11.6	9.4		15.9	74.6	3.2	6.2		19.4	68.7	5.1	6.7	
PHF	.807	.902	.484	.536	.853	.902	.871	.870	.683	.887	.914	.860	.794	.813	.920	.819	.929	.786	.806	.900

Counts Unlimited Inc.
25286 Jaclyn Avenue
Moreno Valley, CA 92557
951-485-7934

City of Rancho Cucamonga
N/S: Haven Avenue
E/W: Baseline Road
Weather: Sunny

File Name : RNCHABAPM
Site Code : 9150075
Start Date : 6/2/2009
Page No : 1

Groups Printed- Large 2 Axle Vehicles

	Haven Avenue Southbound					Baseline Road Westbound					Haven Avenue Northbound					Baseline Road Eastbound					
Start Time	Left	Thru	Right	RoR	App. Total	Left	Thru	Right	RoR	App. Total	Left	Thru	Right	RoR	App. Total	Left	Thru	Right	RoR	App. Total	Int. Total
04:00 PM	0	1	0	0	1	0	0	0	0	0	0	0	0	0	0	1	0	0	0	1	2
04:15 PM	0	3	0	1	4	0	0	0	0	0	0	3	1	0	4	0	3	0	0	3	11
04:30 PM	1	2	0	0	3	0	0	0	0	0	0	0	0	0	0	0	0	0	0	0	3
04:45 PM	1	2	0	0	3	0	1	1	0	2	0	1	1	0	2	1	1	1	0	3	10
Total	2	8	0	1	11	0	1	1	0	2	0	4	2	0	6	2	4	1	0	7	26
05:00 PM	0	2	0	0	2	0	0	0	0	0	1	2	0	0	3	0	2	0	0	2	7
05:15 PM	1	2	0	0	3	0	2	0	0	2	0	1	0	0	1	0	2	0	0	2	8
05:30 PM	1	1	0	0	2	1	0	0	0	1	0	1	0	0	1	0	1	0	0	1	5
05:45 PM	0	1	0	0	1	0	1	0	0	1	1	5	1	0	7	1	1	0	1	3	12
Total	2	6	0	0	8	1	3	0	0	4	2	9	1	0	12	1	6	0	1	8	32
Grand Total	4	14	0	1	19	1	4	1	0	6	2	13	3	0	18	3	10	1	1	15	58
Apprch %	21.1	73.7	0	5.3		16.7	66.7	16.7	0		11.1	72.2	16.7	0		20	66.7	6.7	6.7		
Total %	6.9	24.1	0	1.7	32.8	1.7	6.9	1.7	0	10.3	3.4	22.4	5.2	0	31	5.2	17.2	1.7	1.7	25.9	

	Haven Avenue Southbound					Baseline Road Westbound					Haven Avenue Northbound					Baseline Road Eastbound					
Start Time	Left	Thru	Right	RoR	App. Total		Thru	Right	RoR	App. Total		Thru	Right	RoR	App. Total		Thru	Right	RoR	App. Total	Int. Total
Peak Hour Analysis From 05:00 PM to 05:45 PM - Peak 1 of 1																					
Peak Hour for Entire Intersection Begins at 05:00 PM																					
05:00 PM	0	2	0	0	2	0	0	0	0	0	1	2	0	0	3	0	2	0	0	2	7
05:15 PM	1	2	0	0	3	0	2	0	0	2	0	1	0	0	1	0	2	0	0	2	8
05:30 PM	1	1	0	0	2	1	0	0	0	1	0	1	0	0	1	0	1	0	0	1	5
05:45 PM	0	1	0	0	1	0	1	0	0	1	1	5	1	0	7	1	1	0	1	3	12
Total Volume	2	6	0	0	8	1	3	0	0	4	2	9	1	0	12	1	6	0	1	8	32
% App. Total	25	75	0	0		25	75	0	0		16.7	75	8.3	0		12.5	75	0	12.5		
PHF	.500	.750	.000	.000	.667	.250	.375	.000	.000	.500	.500	.450	.250	.000	.429	.250	.750	.000	.250	.667	.667

Counts Unlimited Inc.
25286 Jaclyn Avenue
Moreno Valley, CA 92557
951-485-7934

City of Rancho Cucamonga
N/S: Haven Avenue
E/W: Baseline Road
Weather: Sunny

File Name : RNCHABAPM
Site Code : 9150075
Start Date : 6/2/2009
Page No : 2

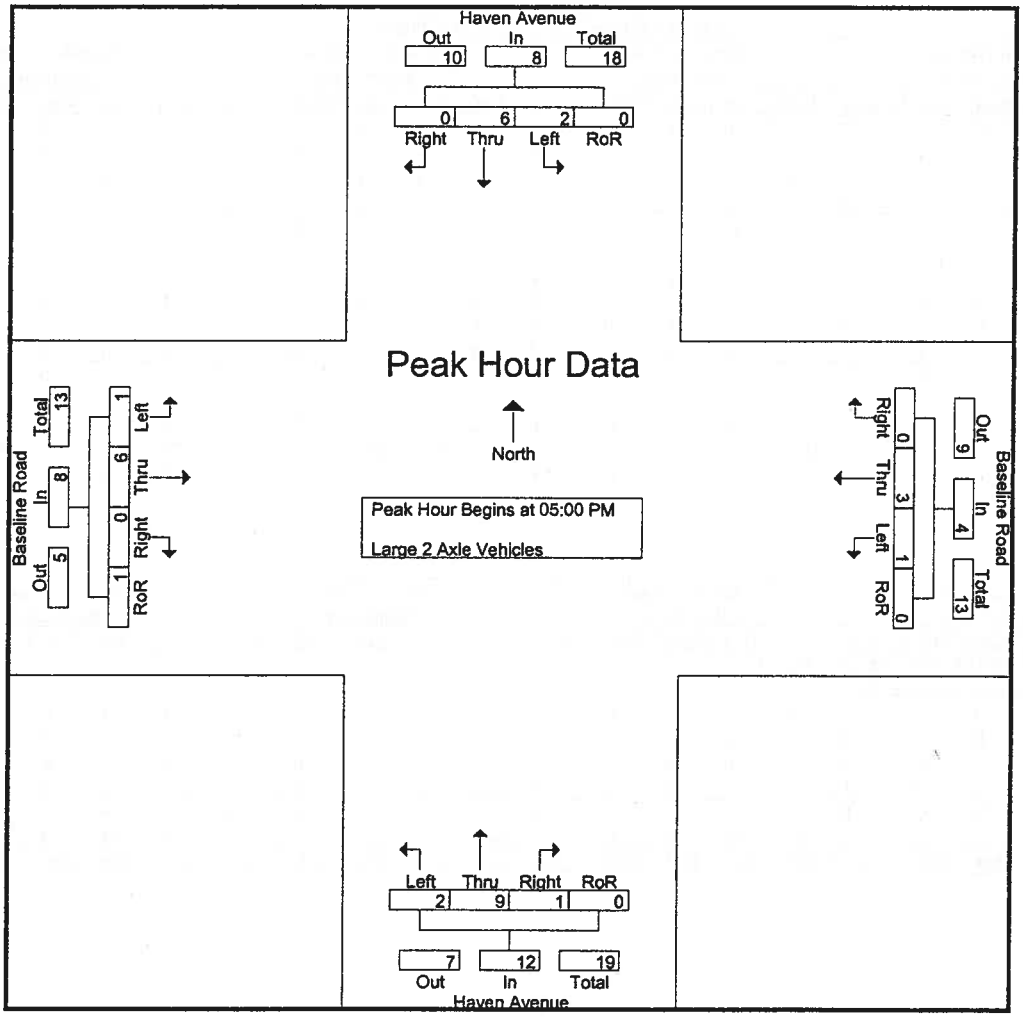

Peak Hour Analysis From 05:00 PM to 05:45 PM - Peak 1 of 1

Peak Hour for Each Approach Begins at:

	05:00 PM					05:00 PM					05:00 PM					05:00 PM				
+0 mins.	0	2	0	0	2	0	0	0	0	0	1	2	0	0	3	0	2	0	0	2
+15 mins.	1	2	0	0	3	0	2	0	0	2	0	1	0	0	1	0	2	0	0	2
+30 mins.	1	1	0	0	2	1	0	0	0	1	0	1	0	0	1	0	1	0	0	1
+45 mins.	0	1	0	0	1	0	1	0	0	1	1	5	1	0	7	1	1	0	1	3
Total Volume	2	6	0	0	8	1	3	0	0	4	2	9	1	0	12	1	6	0	1	8
% App. Total	25	75	0	0		25	75	0	0		16.7	75	8.3	0		12.5	75	0	12.5	
PHF	.500	.750	.000	.000	.667	.250	.375	.000	.000	.500	.500	.450	.250	.000	.429	.250	.750	.000	.250	.667

Counts Unlimited Inc.
25286 Jaclyn Avenue
Moreno Valley, CA 92557
951-485-7934

City of Rancho Cucamonga
N/S: Haven Avenue
E/W: Baseline Road
Weather: Sunny

File Name : RNCHABAPM
Site Code : 9150075
Start Date : 6/2/2009
Page No : 1

Groups Printed- 3 Axle Vehicles

	Haven Avenue Southbound					Baseline Road Westbound					Haven Avenue Northbound					Baseline Road Eastbound					
Start Time	Left	Thru	Right	RoR	App. Total	Left	Thru	Right	RoR	App. Total	Left	Thru	Right	RoR	App. Total	Left	Thru	Right	RoR	App. Total	Int. Total
04:00 PM	0	1	0	0	1	0	0	0	0	0	0	0	0	0	0	0	1	0	0	1	2
04:15 PM	0	1	0	0	1	0	1	0	0	1	0	1	0	0	1	0	0	0	0	0	3
04:30 PM	0	0	0	0	0	0	0	0	0	0	0	0	0	0	0	0	1	0	0	1	1
04:45 PM	0	0	0	0	0	0	0	0	0	0	0	0	0	0	0	0	0	0	0	0	0
Total	0	2	0	0	2	0	1	0	0	1	0	1	0	0	1	0	2	0	0	2	6
05:00 PM	0	0	0	0	0	0	0	0	0	0	0	0	0	0	0	0	1	0	0	1	1
05:15 PM	0	0	0	0	0	0	1	0	0	1	0	0	0	0	0	0	0	0	0	0	1
05:30 PM	0	0	0	0	0	0	0	0	0	0	0	0	0	0	0	0	0	0	0	0	0
05:45 PM	0	0	0	0	0	0	0	0	0	0	0	0	0	0	0	0	0	0	0	0	0
Total	0	0	0	0	0	0	1	0	0	1	0	0	0	0	0	0	1	0	0	1	2
Grand Total	0	2	0	0	2	0	2	0	0	2	0	1	0	0	1	0	3	0	0	3	8
Apprch %	0	100	0	0		0	100	0	0		0	100	0	0		0	100	0	0		
Total %	0	25	0	0	25	0	25	0	0	25	0	12.5	0	0	12.5	0	37.5	0	0	37.5	

	Haven Avenue Southbound					Baseline Road Westbound					Haven Avenue Northbound					Baseline Road Eastbound					
Start Time	Left	Thru	Right	RoR	App. Total		Thru	Right	RoR	App. Total		Thru	Right	RoR	App. Total		Thru	Right	RoR	App. Total	Int. Total
Peak Hour Analysis From 05:00 PM to 05:45 PM - Peak 1 of 1																					
Peak Hour for Entire Intersection Begins at 05:00 PM																					
05:00 PM	0	0	0	0	0	0	0	0	0	0	0	0	0	0	0	0	1	0	0	1	1
05:15 PM	0	0	0	0	0	0	1	0	0	1	0	0	0	0	0	0	0	0	0	0	1
05:30 PM	0	0	0	0	0	0	0	0	0	0	0	0	0	0	0	0	0	0	0	0	0
05:45 PM	0	0	0	0	0	0	0	0	0	0	0	0	0	0	0	0	0	0	0	0	0
Total Volume	0	0	0	0	0	0	1	0	0	1	0	0	0	0	0	0	1	0	0	1	2
% App. Total	0	0	0	0		0	100	0	0		0	0	0	0		0	100	0	0		
PHF	.000	.000	.000	.000	.000	.000	.250	.000	.000	.250	.000	.000	.000	.000	.000	.000	.250	.000	.000	.250	.500

Counts Unlimited Inc.
25286 Jaclyn Avenue
Moreno Valley, CA 92557
951-485-7934

City of Rancho Cucamonga
N/S: Haven Avenue
E/W: Baseline Road
Weather: Sunny

File Name : RNCHABAPM
Site Code : 9150075
Start Date : 6/2/2009
Page No : 2

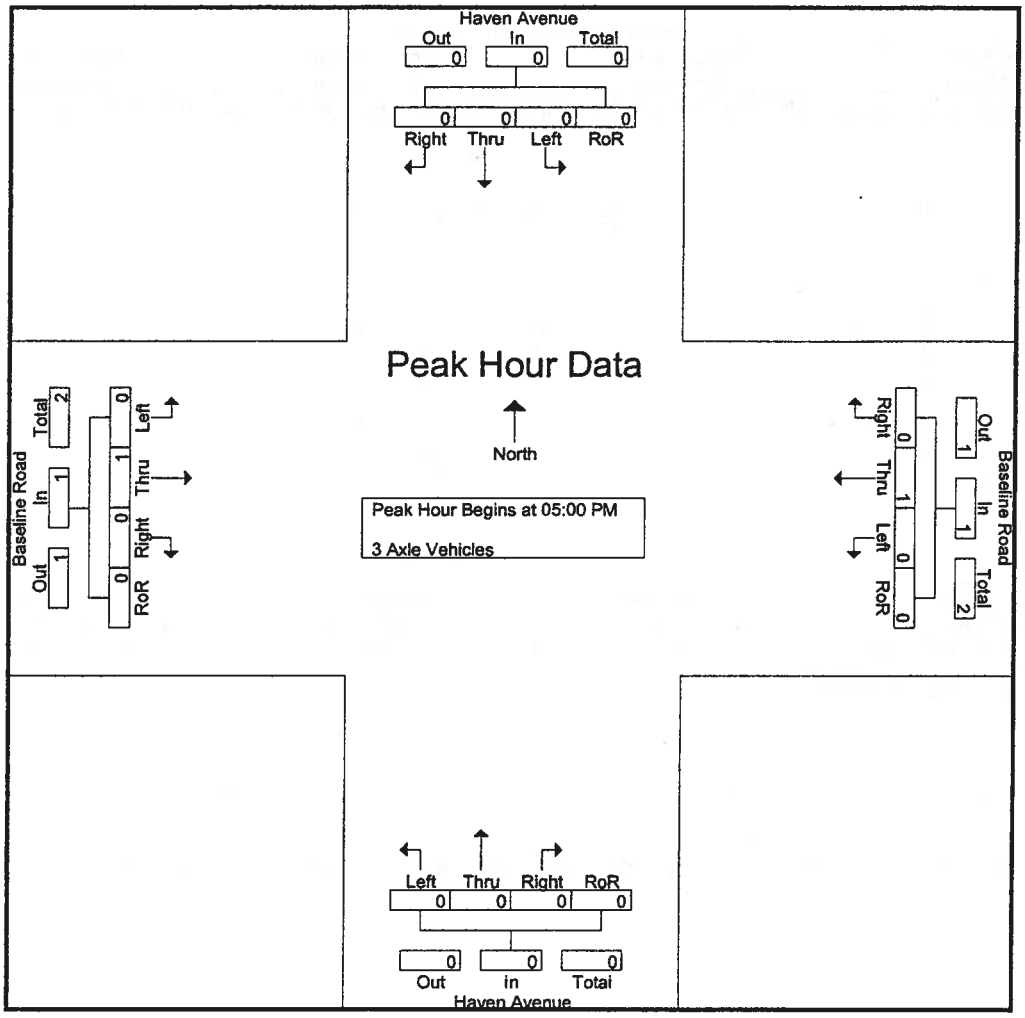

Peak Hour Analysis From 05:00 PM to 05:45 PM - Peak 1 of 1

Peak Hour for Each Approach Begins at:

	05:00 PM					05:00 PM					05:00 PM					05:00 PM				
+0 mins.	0	0	0	0	0	0	0	0	0	0	0	0	0	0	0	0	1	0	0	1
+15 mins.	0	0	0	0	0	0	1	0	0	1	0	0	0	0	0	0	0	0	0	0
+30 mins.	0	0	0	0	0	0	0	0	0	0	0	0	0	0	0	0	0	0	0	0
+45 mins.	0	0	0	0	0	0	0	0	0	0	0	0	0	0	0	0	0	0	0	0
Total Volume	0	0	0	0	0	0	1	0	0	1	0	0	0	0	0	0	1	0	0	1
% App. Total	0	0	0	0		0	100	0	0		0	0	0	0		0	100	0	0	
PHF	.000	.000	.000	.000	.000	.000	.250	.000	.000	.250	.000	.000	.000	.000	.000	.000	.250	.000	.000	.250

Counts Unlimited Inc.
25286 Jaclyn Avenue
Moreno Valley, CA 92557
951-485-7934

City of Rancho Cucamonga
N/S: Haven Avenue
E/W: Baseline Road
Weather: Sunny

File Name : RNCHABAPM
Site Code : 9150075
Start Date : 6/2/2009
Page No : 1

Groups Printed- 4+ Axle Trucks

	Haven Avenue Southbound					Baseline Road Westbound					Haven Avenue Northbound					Baseline Road Eastbound					
Start Time	Left	Thru	Right	RoR	App. Total	Left	Thru	Right	RoR	App. Total	Left	Thru	Right	RoR	App. Total	Left	Thru	Right	RoR	App. Total	Int. Total
04:00 PM	0	0	1	0	1	0	0	0	0	0	0	0	0	0	0	0	0	0	0	0	1
04:15 PM	0	0	0	0	0	0	0	0	0	0	0	0	0	0	0	0	1	0	0	1	1
04:30 PM	0	0	0	0	0	0	0	0	0	0	0	0	0	0	0	0	0	0	0	0	0
04:45 PM	0	0	0	0	0	0	0	0	0	0	0	0	0	0	0	0	0	0	0	0	0
Total	0	0	1	0	1	0	0	0	0	0	0	0	0	0	0	0	1	0	0	1	2
05:00 PM	0	0	0	0	0	0	0	0	0	0	0	2	0	0	2	0	0	0	0	0	2
05:15 PM	0	1	0	0	1	0	0	0	0	0	0	0	0	0	0	0	0	0	0	0	1
05:30 PM	0	0	0	0	0	0	0	0	0	0	0	0	0	0	0	0	0	0	0	0	0
05:45 PM	0	2	0	0	2	0	0	0	0	0	0	0	0	0	0	0	0	0	0	0	2
Total	0	3	0	0	3	0	0	0	0	0	0	2	0	0	2	0	0	0	0	0	5
Grand Total	0	3	1	0	4	0	0	0	0	0	0	2	0	0	2	0	1	0	0	1	7
Apprch %	0	75	25	0		0	0	0	0		0	100	0	0		0	100	0	0		
Total %	0	42.9	14.3	0	57.1	0	0	0	0	0	0	28.6	0	0	28.6	0	14.3	0	0	14.3	

	Haven Avenue Southbound					Baseline Road Westbound					Haven Avenue Northbound					Baseline Road Eastbound					
Start Time	Left	Thru	Right	RoR	App. Total		Thru	Right	RoR	App. Total		Thru	Right	RoR	App. Total		Thru	Right	RoR	App. Total	Int. Total
Peak Hour Analysis From 05:00 PM to 05:45 PM - Peak 1 of 1																					
Peak Hour for Entire Intersection Begins at 05:00 PM																					
05:00 PM	0	0	0	0	0	0	0	0	0	0	0	2	0	0	2	0	0	0	0	0	2
05:15 PM	0	1	0	0	1	0	0	0	0	0	0	0	0	0	0	0	0	0	0	0	1
05:30 PM	0	0	0	0	0	0	0	0	0	0	0	0	0	0	0	0	0	0	0	0	0
05:45 PM	0	2	0	0	2	0	0	0	0	0	0	0	0	0	0	0	0	0	0	0	2
Total Volume	0	3	0	0	3	0	0	0	0	0	0	2	0	0	2	0	0	0	0	0	5
% App. Total	0	100	0	0		0	0	0	0		0	100	0	0		0	0	0	0		
PHF	.000	.375	.000	.000	.375	.000	.000	.000	.000	.000	.000	.250	.000	.000	.250	.000	.000	.000	.000	.000	.625

Counts Unlimited Inc.
25286 Jaclyn Avenue
Moreno Valley, CA 92557
951-485-7934

City of Rancho Cucamonga
N/S: Haven Avenue
E/W: Baseline Road
Weather: Sunny

File Name : RNCHABAPM
Site Code : 9150075
Start Date : 6/2/2009
Page No : 2

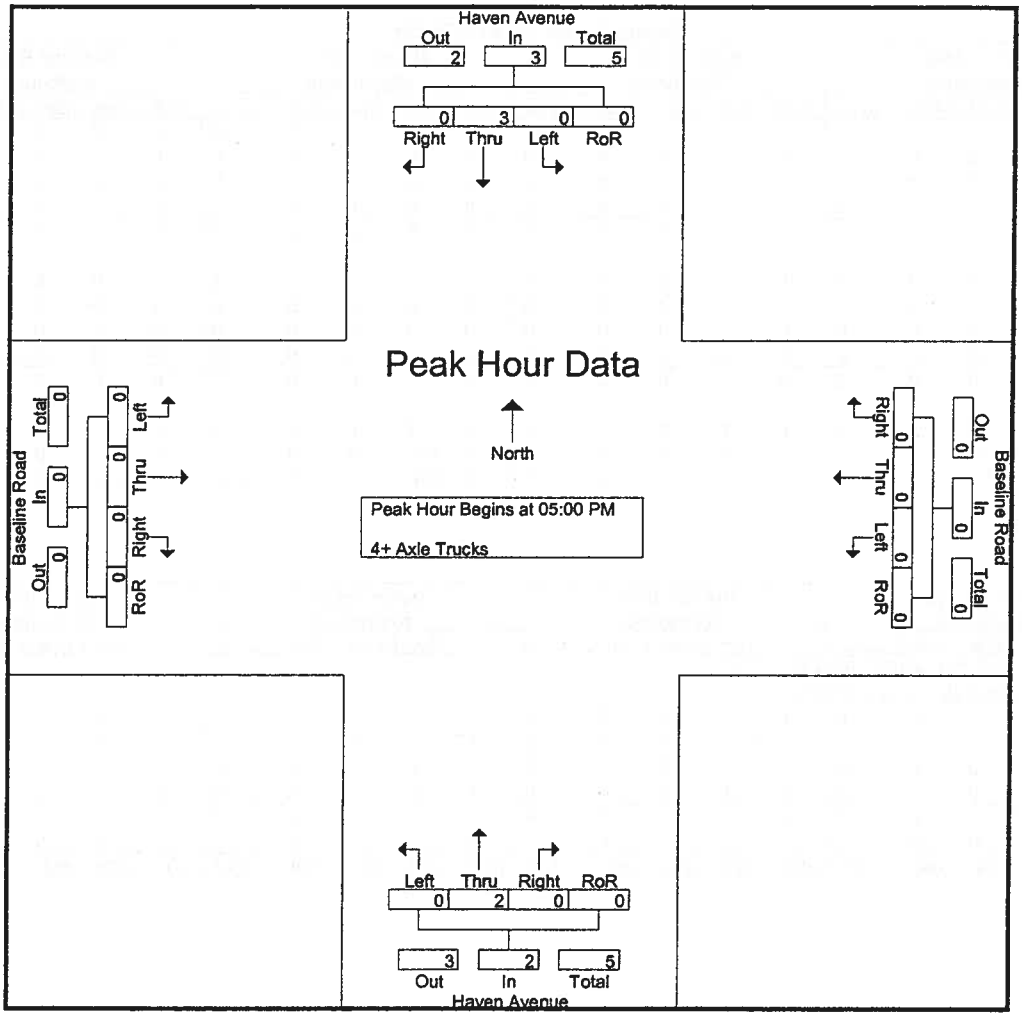

Peak Hour Analysis From 05:00 PM to 05:45 PM - Peak 1 of 1

Peak Hour for Each Approach Begins at:

	05:00 PM					05:00 PM					05:00 PM					05:00 PM				
+0 mins.	0	0	0	0	0	0	0	0	0	0	0	2	0	0	2	0	0	0	0	0
+15 mins.	0	1	0	0	1	0	0	0	0	0	0	0	0	0	0	0	0	0	0	0
+30 mins.	0	0	0	0	0	0	0	0	0	0	0	0	0	0	0	0	0	0	0	0
+45 mins.	0	2	0	0	2	0	0	0	0	0	0	0	0	0	0	0	0	0	0	0
Total Volume	0	3	0	0	3	0	0	0	0	0	0	2	0	0	2	0	0	0	0	0
% App. Total	0	100	0	0		0	0	0	0		0	100	0	0		0	0	0	0	
PHF	.000	.375	.000	.000	.375	.000	.000	.000	.000	.000	.000	.250	.000	.000	.250	.000	.000	.000	.000	.000

PASSENGER CAR EQUIVALENCY PEAK HOUR COUNT SUMMARY

INTERSECTION 13
Haven Avenue (NS) / Foothill Boulevard / SR-66 (EW)

AM PEAK HOUR

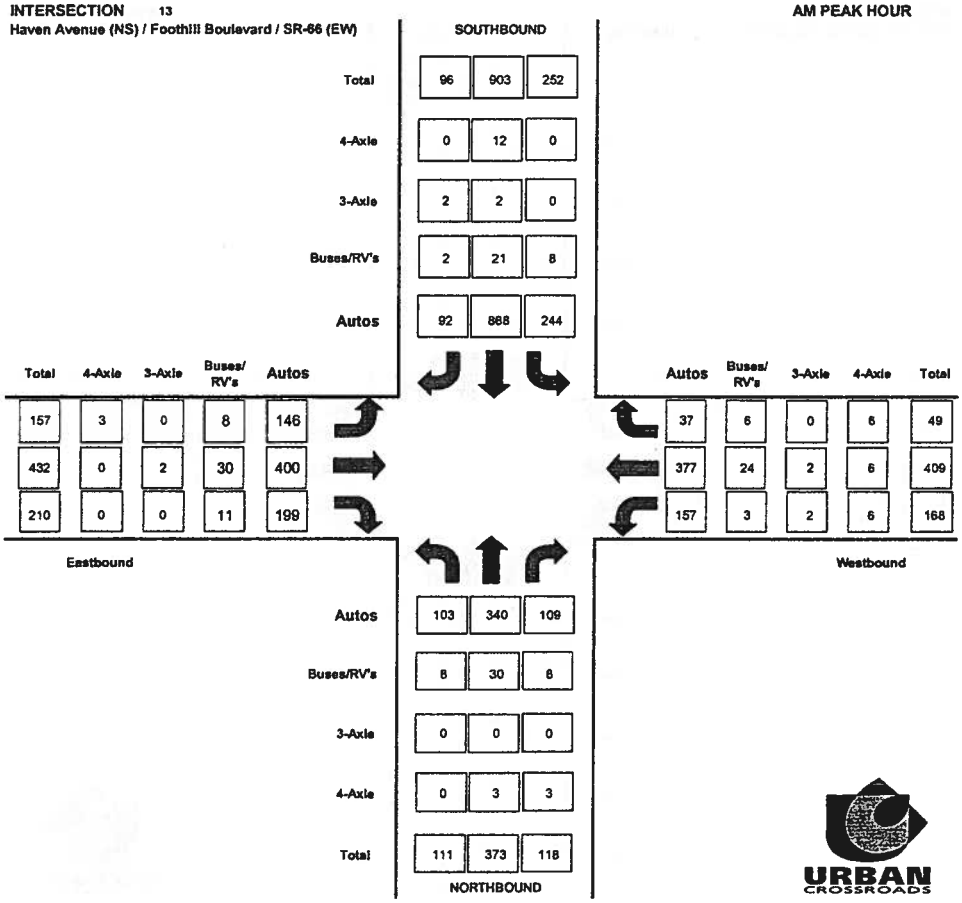

INTERSECTION 13
Haven Avenue (NS) / Foothill Boulevard / SR-66 (EW)

PM PEAK HOUR

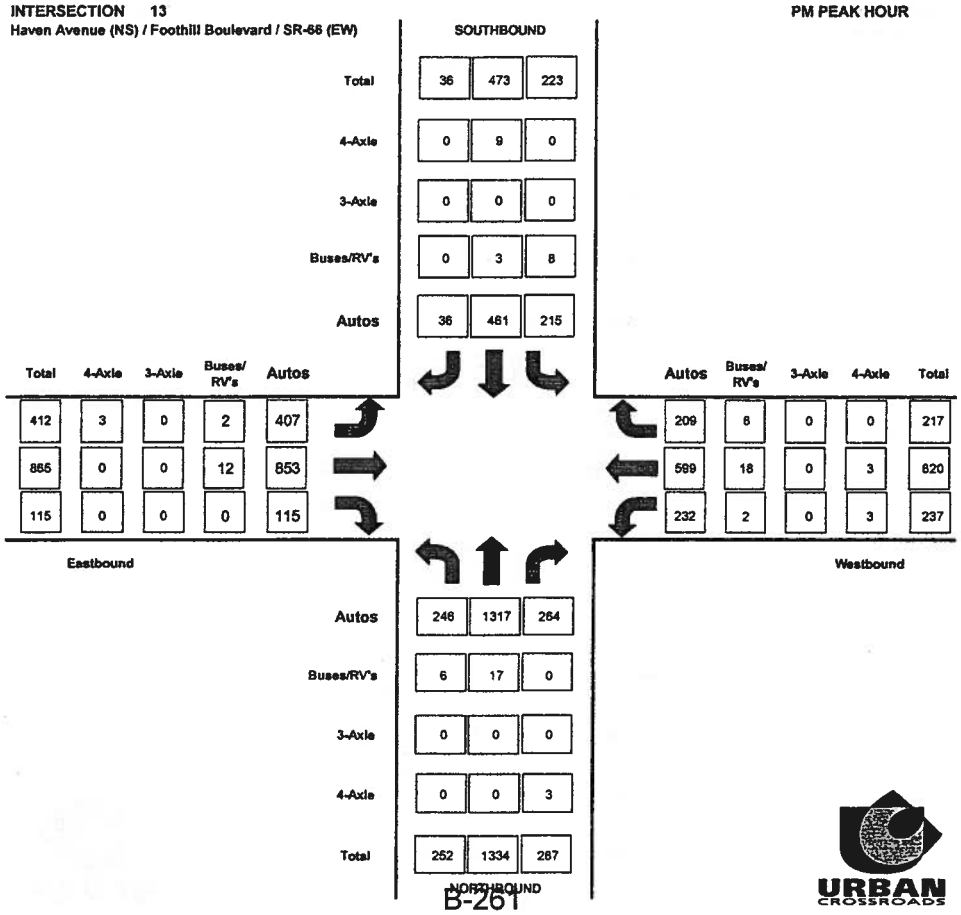

RAW PEAK HOUR COUNT SUMMARY

INTERSECTION 13
Haven Avenue (NS) / Foothill Boulevard / SR-66 (EW)

AM PEAK HOUR

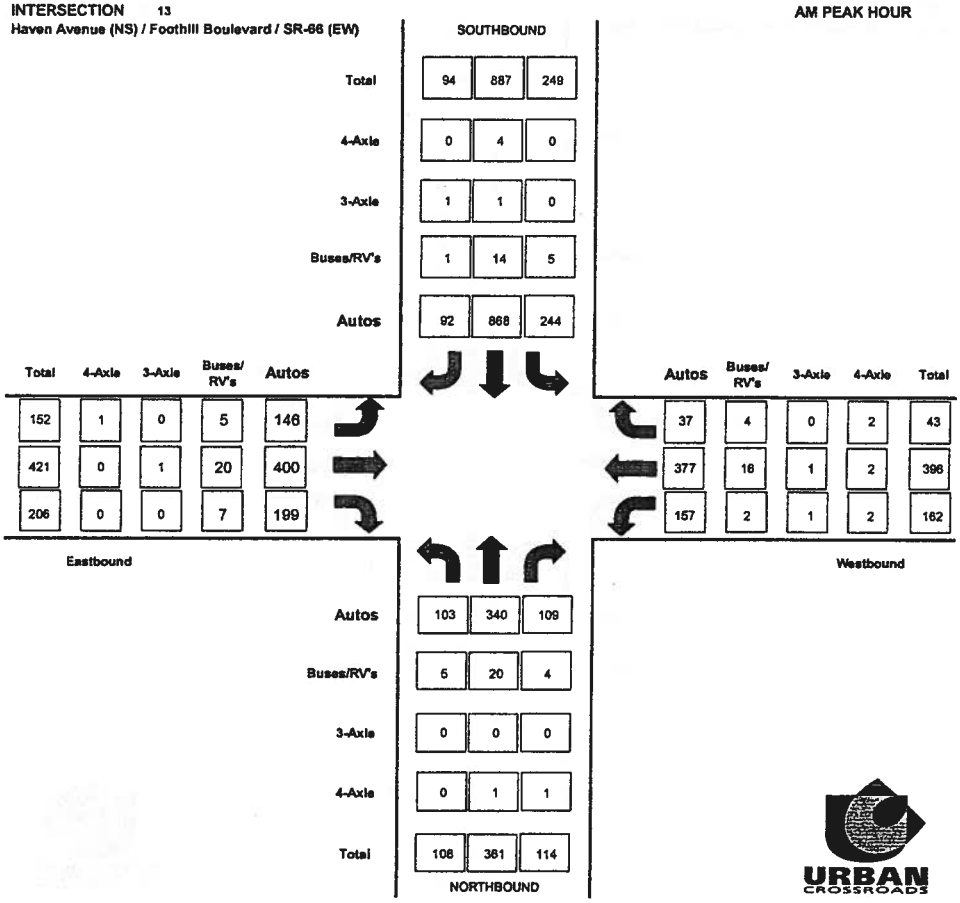

INTERSECTION 13
Haven Avenue (NS) / Foothill Boulevard / SR-66 (EW)

PM PEAK HOUR

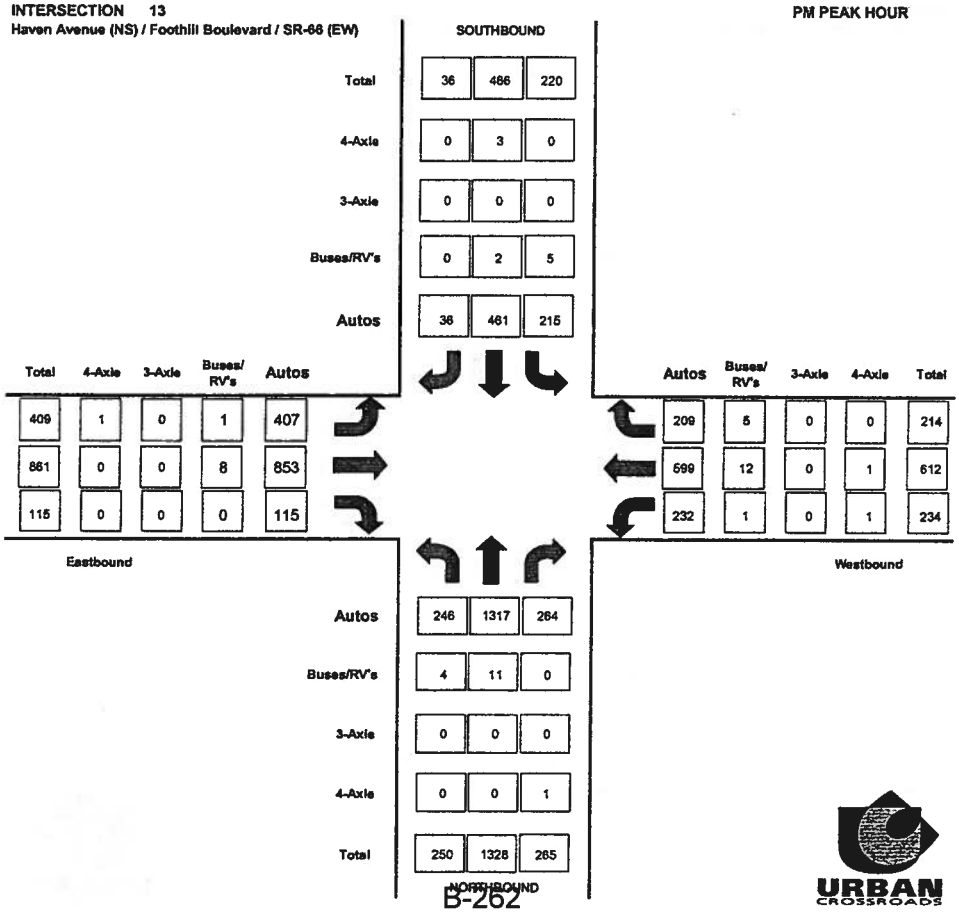

Counts Unlimited Inc.
25286 Jaclyn Avenue
Moreno Valley, CA 92557
951-485-7934

City of Rancho Cucamonga
N/S: Haven Avenue
E/W: Foothill Boulevard
Weather: Sunny

File Name : RNCHAFOAM
Site Code : 9150093
Start Date : 6/2/2009
Page No : 1

Groups Printed- Passenger Vehicles - Large 2 Axle Vehicles - 3 Axle Vehicles - 4+ Axle Trucks

	Haven Avenue Southbound					Foothill Boulevard Westbound					Haven Avenue Northbound					Foothill Boulevard Eastbound					
Start Time	Left	Thru	Right	RoR	App. Total	Left	Thru	Right	RoR	App. Total	Left	Thru	Right	RoR	App. Total	Left	Thru	Right	RoR	App. Total	Int. Total
07:00 AM	23	172	5	9	209	34	77	3	6	120	20	73	11	9	113	39	61	14	11	125	567
07:15 AM	41	189	6	20	256	33	97	2	9	141	22	81	5	4	112	35	72	18	10	135	644
07:30 AM	34	207	9	20	270	31	105	5	1	142	24	105	16	7	152	42	92	21	10	165	729
07:45 AM	73	265	6	17	361	46	101	6	9	162	30	75	8	20	133	41	126	31	24	222	878
Total	171	833	26	66	1096	144	380	16	25	565	96	334	40	40	510	157	351	84	55	647	2818
08:00 AM	69	224	2	19	314	39	94	2	4	139	27	82	14	23	146	31	99	43	19	192	791
08:15 AM	73	191	4	17	285	46	96	6	10	158	27	99	17	9	152	38	104	30	28	200	795
08:30 AM	63	172	4	4	243	32	87	10	7	136	31	81	19	11	142	54	105	13	29	201	722
08:45 AM	62	156	10	12	240	35	93	7	13	148	56	107	23	13	199	50	104	12	17	183	770
Total	267	743	20	52	1082	152	370	25	34	581	141	369	73	56	639	173	412	98	93	776	3078
Grand Total	438	1576	46	118	2178	296	750	41	59	1146	237	703	113	96	1149	330	763	182	148	1423	5896
Apprch %	20.1	72.4	2.1	5.4		25.8	65.4	3.6	5.1		20.6	61.2	9.8	8.4		23.2	53.6	12.8	10.4		
Total %	7.4	26.7	0.8	2	36.9	5	12.7	0.7	1	19.4	4	11.9	1.9	1.6	19.5	5.6	12.9	3.1	2.5	24.1	
Passenger Vehicles		1540																			
% Passenger Vehicles	97.9	97.7	95.7	97.5	97.7	95.9	95.1	82.9	94.9	94.9	95.8	93.2	95.6	96.9	94.3	96.4	94.4	95.1	96.6	95.2	95.9
Large 2 Axle Vehicles																					
% Large 2 Axle Vehicles	2.1	1.8	2.2	1.7	1.9	2.7	4	9.8	5.1	3.9	4.2	6.4	3.5	3.1	5.4	3.3	5.5	4.9	3.4	4.7	3.6
3 Axle Vehicles	0	1	1	0	2	1	1	0	0	2	0	0	0	0	0	0	1	0	0	1	5
% 3 Axle Vehicles	0	0.1	2.2	0	0.1	0.3	0.1	0	0	0.2	0	0	0	0	0	0	0.1	0	0	0.1	0.1
4+ Axle Trucks	0	6	0	1	7	3	6	3	0	12	0	3	1	0	4	1	0	0	0	1	24
% 4+ Axle Trucks																					

	Haven Avenue Southbound					Foothill Boulevard Westbound					Haven Avenue Northbound					Foothill Boulevard Eastbound					
Start Time	Left	Thru	Right	RoR	App. Total	Left	Thru	Right	RoR	App. Total	Left	Thru	Right	RoR	App. Total	Left	Thru	Right	RoR	App. Total	Int. Total
Peak Hour Analysis From 07:00 AM to 08:45 AM - Peak 1 of 1																					
Peak Hour for Entire Intersection Begins at 07:30 AM																					
07:30 AM	34	207	**9**	**20**	270	31	**105**	5	1	142	24	**105**	16	7	**152**	42	92	21	10	165	729
07:45 AM	**73**	**265**	6	17	**361**	**46**	101	**6**	9	**162**	**30**	75	8	20	133	41	**126**	31	24	**222**	**878**
08:00 AM	69	224	2	19	314	39	94	2	4	139	27	82	14	**23**	146	31	99	**43**	19	192	791
08:15 AM	73	191	4	17	285	46	96	6	**10**	158	27	99	**17**	9	152	38	104	30	**28**	200	795
Total Volume	249	887	21	73	1230	162	396	19	24	601	108	361	55	59	583	152	421	125	81	779	3193
% App. Total	20.2	72.1	1.7	5.9		27	65.9	3.2	4		18.5	61.9	9.4	10.1		19.5	54	16	10.4		
PHF	.853	.837	.583	.913	.852	.880	.943	.792	.600	.927	.900	.860	.809	.641	.959	.905	.835	.727	.723	.877	.909

Counts Unlimited Inc.
25286 Jaclyn Avenue
Moreno Valley, CA 92557
951-485-7934

City of Rancho Cucamonga
N/S: Haven Avenue
E/W: Foothill Boulevard
Weather: Sunny

File Name : RNCHAFOAM
Site Code : 9150093
Start Date : 6/2/2009
Page No : 2

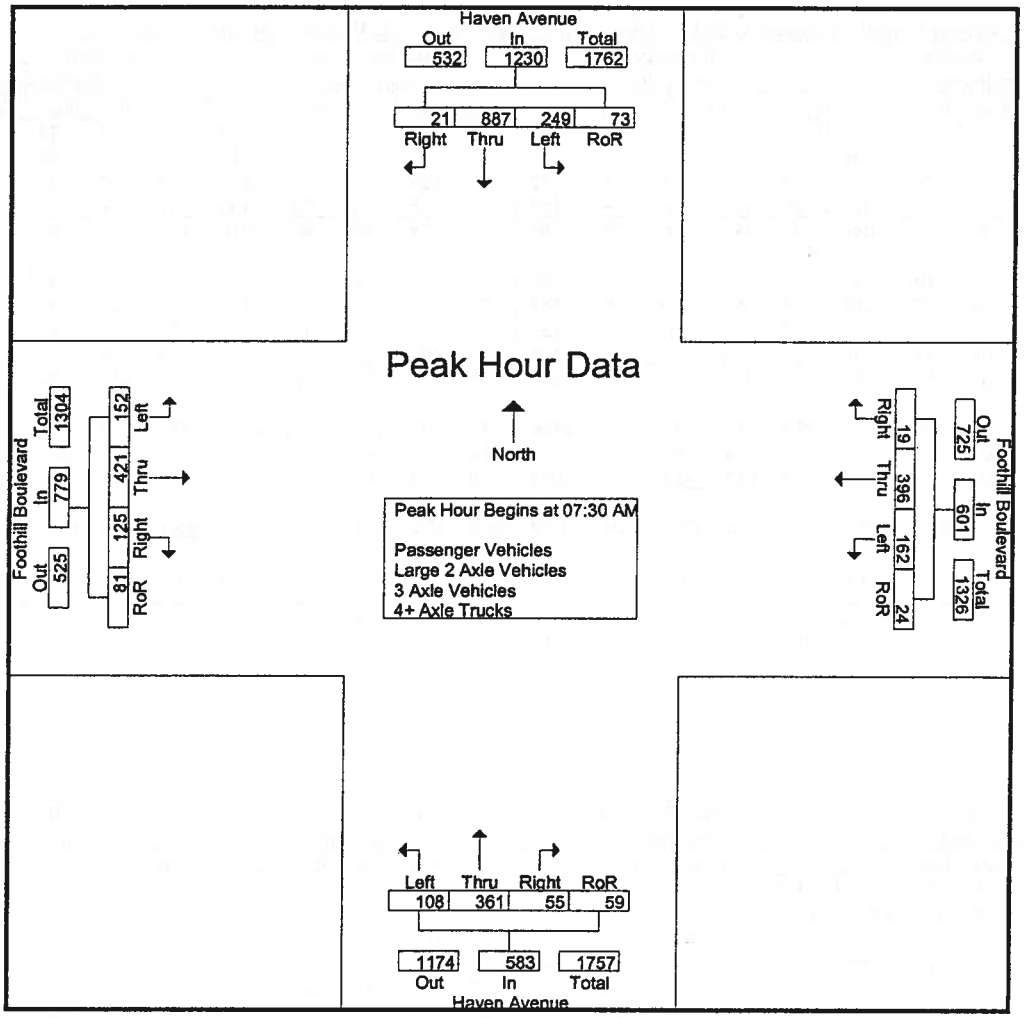

Peak Hour Analysis From 07:00 AM to 08:45 AM - Peak 1 of 1

Peak Hour for Each Approach Begins at:

	07:30 AM					07:30 AM					08:00 AM					07:45 AM				
+0 mins.	34	207	9	20	270	31	105	5	1	142	27	82	14	23	146	41	126	31	24	222
+15 mins.	73	265	6	17	361	46	101	6	9	162	27	99	17	9	152	31	99	43	19	192
+30 mins.	69	224	2	19	314	39	94	2	4	139	31	81	19	11	142	38	104	30	28	200
+45 mins.	73	191	4	17	285	46	96	6	10	158	56	107	23	13	199	54	105	13	29	201
Total Volume	249	887	21	73	1230	162	396	19	24	601	141	369	73	56	639	164	434	117	100	815
% App. Total	20.2	72.1	1.7	5.9		27	65.9	3.2	4		22.1	57.7	11.4	8.8		20.1	53.3	14.4	12.3	
PHF	.853	.837	.583	.913	.852	.880	.943	.792	.600	.927	.629	.862	.793	.609	.803	.759	.861	.680	.862	.918

Counts Unlimited Inc.
25286 Jaclyn Avenue
Moreno Valley, CA 92557
951-485-7934

City of Rancho Cucamonga
N/S: Haven Avenue
E/W: Foothill Boulevard
Weather: Sunny

File Name : RNCHAFOAM
Site Code : 9150093
Start Date : 6/2/2009
Page No : 1

Groups Printed- Passenger Vehicles

	Haven Avenue Southbound					Foothill Boulevard Westbound					Haven Avenue Northbound					Foothill Boulevard Eastbound					
Start Time	Left	Thru	Right	RoR	App. Total	Left	Thru	Right	RoR	App. Total	Left	Thru	Right	RoR	App. Total	Left	Thru	Right	RoR	App. Total	Int. Total
07:00 AM	23	165	4	9	201	32	73	2	5	112	20	68	10	9	107	36	57	13	11	117	537
07:15 AM	39	187	6	19	251	31	95	2	9	137	18	73	4	4	99	34	65	15	10	124	611
07:30 AM	33	205	9	20	267	29	101	5	1	136	22	102	15	6	145	42	89	21	9	161	709
07:45 AM	72	258	5	17	352	44	95	5	9	153	30	70	8	19	127	38	117	31	24	210	842
Total	167	815	24	65	1071	136	364	14	24	538	90	313	37	38	478	150	328	80	54	612	2699
08:00 AM	69	218	2	19	308	38	92	1	3	134	26	77	14	22	139	30	95	42	17	184	765
08:15 AM	70	187	4	16	277	46	89	3	10	148	25	91	16	9	141	36	99	29	26	190	756
08:30 AM	62	166	4	4	236	29	80	10	6	125	31	75	18	11	135	53	101	11	29	194	690
08:45 AM	61	154	10	11	236	35	88	6	13	142	55	99	23	13	190	49	97	11	17	174	742
Total	262	725	20	50	1057	148	349	20	32	549	137	342	71	55	605	168	392	93	89	742	2953
Grand Total	429	1540	44	115	2128	284	713	34	56	1087	227	655	108	93	1083	318	720	173	143	1354	5652
Apprch %	20.2	72.4	2.1	5.4		26.1	65.6	3.1	5.2		21	60.5	10	8.6		23.5	53.2	12.8	10.6		
Total %	7.6	27.2	0.8	2	37.7	5	12.6	0.6	1	19.2	4	11.6	1.9	1.6	19.2	5.6	12.7	3.1	2.5	24	

	Haven Avenue Southbound					Foothill Boulevard Westbound					Haven Avenue Northbound					Foothill Boulevard Eastbound					
Start Time	Left	Thru	Right	RoR	App. Total		Thru	Right	RoR	App. Total		Thru	Right	RoR	App. Total		Thru	Right	RoR	App. Total	Int. Total
Peak Hour Analysis From 07:30 AM to 08:15 AM - Peak 1 of 1																					
Peak Hour for Entire Intersection Begins at 07:30 AM																					
07:30 AM	33	205	**9**	**20**	267	29	**101**	**5**	1	136	22	**102**	15	6	**145**	**42**	89	21	9	161	709
07:45 AM	**72**	**258**	5	17	**352**	44	95	5	9	**153**	**30**	70	8	19	127	38	117	31	24	**210**	**842**
08:00 AM	69	218	2	19	308	38	92	1	3	134	26	77	14	**22**	139	30	95	**42**	17	184	765
08:15 AM	70	187	4	16	277	**46**	89	3	**10**	148	25	91	**16**	9	141	36	99	29	**26**	190	756
Total Volume	244	868	20	72	1204	157	377	14	23	571	103	340	53	56	552	146	400	123	76	745	3072
% App. Total	20.3	72.1	1.7	6		27.5	66	2.5	4		18.7	61.6	9.6	10.1		19.6	53.7	16.5	10.2		
PHF	.847	.841	.556	.900	.855	.853	.933	.700	.575	.933	.858	.833	.828	.636	.952	.869	.855	.732	.731	.887	.912

Counts Unlimited Inc.
25286 Jaclyn Avenue
Moreno Valley, CA 92557
951-485-7934

City of Rancho Cucamonga
N/S: Haven Avenue
E/W: Foothill Boulevard
Weather: Sunny

File Name : RNCHAFOAM
Site Code : 9150093
Start Date : 6/2/2009
Page No : 2

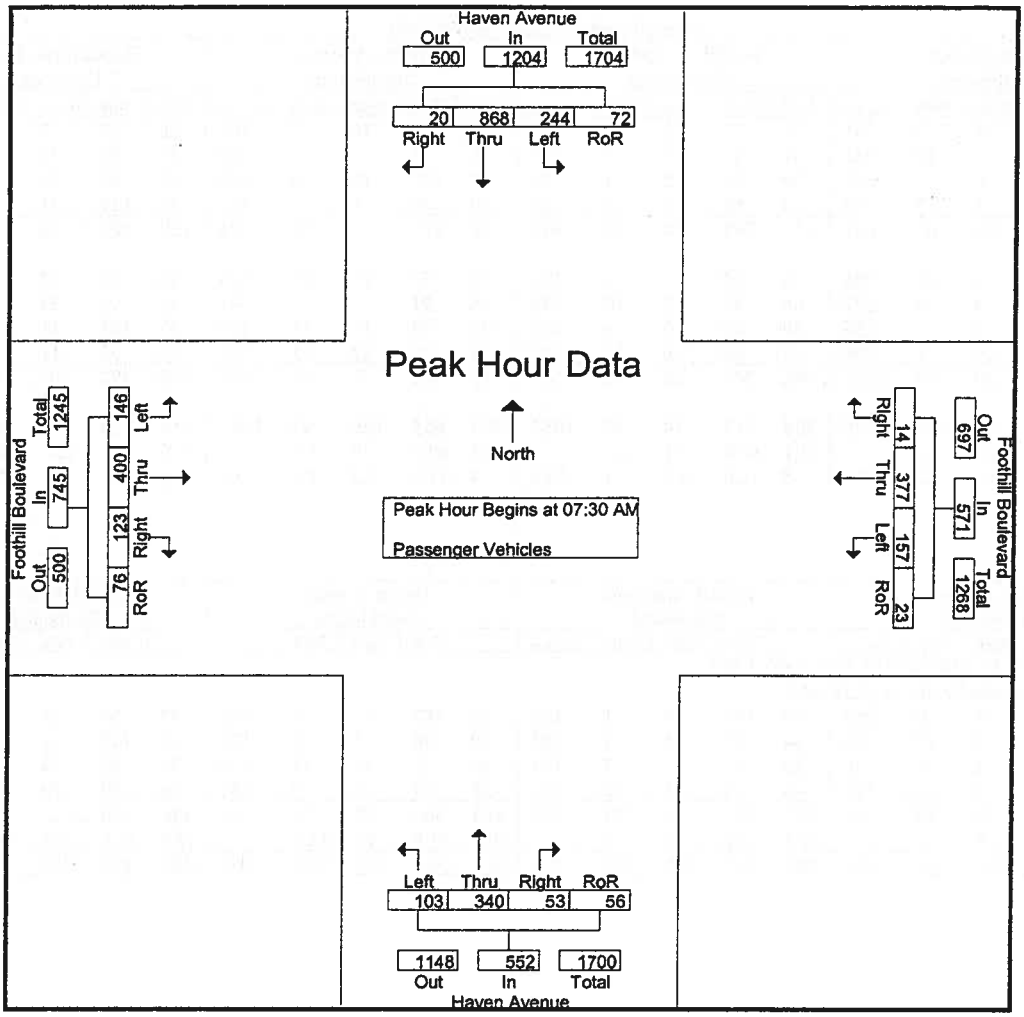

Peak Hour Analysis From 07:30 AM to 08:15 AM - Peak 1 of 1

Peak Hour for Each Approach Begins at:

	07:30 AM					07:30 AM					07:30 AM					07:30 AM				
+0 mins.	33	205	9	**20**	267	29	**101**	**5**	1	136	22	**102**	15	6	145	**42**	89	21	9	161
+15 mins.	**72**	**258**	5	17	**352**	44	95	5	9	**153**	**30**	70	8	19	127	38	**117**	31	24	**210**
+30 mins.	69	218	2	19	308	38	92	1	3	134	26	77	14	**22**	139	30	95	**42**	17	184
+45 mins.	70	187	4	16	277	**46**	89	3	**10**	148	25	91	**16**	9	141	36	99	29	**26**	190
Total Volume	244	868	20	72	1204	157	377	14	23	571	103	340	53	56	552	146	400	123	76	745
% App. Total	20.3	72.1	1.7	6		27.5	66	2.5	4		18.7	61.6	9.6	10.1		19.6	53.7	16.5	10.2	
PHF	.847	.841	.556	.900	.855	.853	.933	.700	.575	.933	.858	.833	.828	.636	.952	.869	.855	.732	.731	.887

Counts Unlimited Inc.
25286 Jaclyn Avenue
Moreno Valley, CA 92557
951-485-7934

City of Rancho Cucamonga
N/S: Haven Avenue
E/W: Foothill Boulevard
Weather: Sunny

File Name : RNCHAFOAM
Site Code : 9150093
Start Date : 6/2/2009
Page No : 1

Groups Printed- Large 2 Axle Vehicles

	Haven Avenue Southbound					Foothill Boulevard Westbound					Haven Avenue Northbound					Foothill Boulevard Eastbound					
Start Time	Left	Thru	Right	RoR	App. Total	Left	Thru	Right	RoR	App. Total	Left	Thru	Right	RoR	App. Total	Left	Thru	Right	RoR	App. Total	Int. Total
07:00 AM	0	5	1	0	6	1	4	1	1	7	0	5	1	0	6	3	4	1	0	8	27
07:15 AM	2	2	0	1	5	2	2	0	0	4	4	7	1	0	12	1	7	3	0	11	32
07:30 AM	1	1	0	0	2	1	4	0	0	5	2	2	1	1	6	0	3	0	1	4	17
07:45 AM	1	6	0	0	7	1	4	0	0	5	0	5	0	1	6	2	8	0	0	10	28
Total	4	14	1	1	20	5	14	1	1	21	6	19	3	2	30	6	22	4	1	33	104
08:00 AM	0	5	0	0	5	0	2	1	1	4	1	5	0	1	7	1	4	1	2	8	24
08:15 AM	3	2	0	1	6	0	6	2	0	8	2	8	0	0	10	2	5	1	2	10	34
08:30 AM	1	6	0	0	7	3	3	0	1	7	0	6	1	0	7	1	4	2	0	7	28
08:45 AM	1	2	0	0	3	0	5	0	0	5	1	7	0	0	8	1	7	1	0	9	25
Total	5	15	0	1	21	3	16	3	2	24	4	26	1	1	32	5	20	5	4	34	111
Grand Total	9	29	1	2	41	8	30	4	3	45	10	45	4	3	62	11	42	9	5	67	215
Apprch %	22	70.7	2.4	4.9		17.8	66.7	8.9	6.7		16.1	72.6	6.5	4.8		16.4	62.7	13.4	7.5		
Total %	4.2	13.5	0.5	0.9	19.1	3.7	14	1.9	1.4	20.9	4.7	20.9	1.9	1.4	28.8	5.1	19.5	4.2	2.3	31.2	

	Haven Avenue Southbound					Foothill Boulevard Westbound					Haven Avenue Northbound					Foothill Boulevard Eastbound					
Start Time	Left	Thru	Right	RoR	App. Total		Thru	Right	RoR	App. Total		Thru	Right	RoR	App. Total		Thru	Right	RoR	App. Total	Int. Total
Peak Hour Analysis From 07:30 AM to 08:15 AM - Peak 1 of 1																					
Peak Hour for Entire Intersection Begins at 07:30 AM																					
07:30 AM	1	1	0	0	2	1	4	0	0	5	2	2	1	1	6	0	3	0	1	4	17
07:45 AM	1	6	0	0	7	1	4	0	0	5	0	5	0	1	6	2	8	0	0	10	28
08:00 AM	0	5	0	0	5	0	2	1	1	4	1	5	0	1	7	1	4	1	2	8	24
08:15 AM	3	2	0	1	6	0	6	2	0	8	2	8	0	0	10	2	5	1	2	10	34
Total Volume	5	14	0	1	20	2	16	3	1	22	5	20	1	3	29	5	20	2	5	32	103
% App. Total	25	70	0	5		9.1	72.7	13.6	4.5		17.2	69	3.4	10.3		15.6	62.5	6.2	15.6		
PHF	.417	.583	.000	.250	.714	.500	.667	.375	.250	.688	.625	.625	.250	.750	.725	.625	.625	.500	.625	.800	.757

Counts Unlimited Inc.
25286 Jaclyn Avenue
Moreno Valley, CA 92557
951-485-7934

City of Rancho Cucamonga
N/S: Haven Avenue
E/W: Foothill Boulevard
Weather: Sunny

File Name : RNCHAFOAM
Site Code : 9150093
Start Date : 6/2/2009
Page No : 2

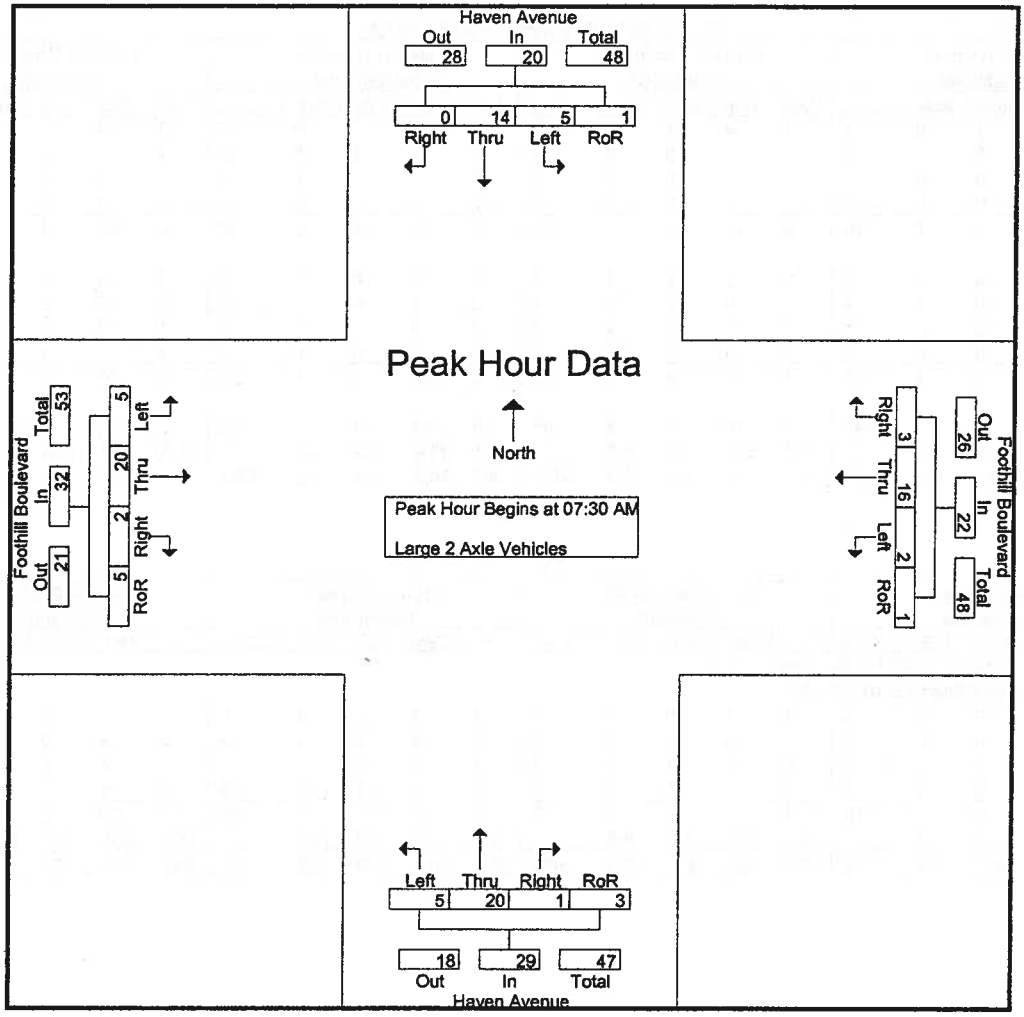

Peak Hour Analysis From 07:30 AM to 08:15 AM - Peak 1 of 1

Peak Hour for Each Approach Begins at:

	07:30 AM					07:30 AM					07:30 AM					07:30 AM				
+0 mins.	1	1	0	0	2	1	4	0	0	5	2	2	1	1	6	0	3	0	1	4
+15 mins.	1	6	0	0	7	1	4	0	0	5	0	5	0	1	6	2	8	0	0	10
+30 mins.	0	5	0	0	5	0	2	1	1	4	1	5	0	1	7	1	4	1	2	8
+45 mins.	3	2	0	1	6	0	6	2	0	8	2	8	0	0	10	2	5	1	2	10
Total Volume	5	14	0	1	20	2	16	3	1	22	5	20	1	3	29	5	20	2	5	32
% App. Total	25	70	0	5		9.1	72.7	13.6	4.5		17.2	69	3.4	10.3		15.6	62.5	6.2	15.6	
PHF	.417	.583	.000	.250	.714	.500	.667	.375	.250	.688	.625	.625	.250	.750	.725	.625	.625	.500	.625	.800

Counts Unlimited Inc.
25286 Jaclyn Avenue
Moreno Valley, CA 92557
951-485-7934

City of Rancho Cucamonga
N/S: Haven Avenue
E/W: Foothill Boulevard
Weather: Sunny

File Name : RNCHAFOAM
Site Code : 9150093
Start Date : 6/2/2009
Page No : 1

Groups Printed- 3 Axle Vehicles

	Haven Avenue Southbound					Foothill Boulevard Westbound					Haven Avenue Northbound					Foothill Boulevard Eastbound					
Start Time	Left	Thru	Right	RoR	App. Total	Left	Thru	Right	RoR	App. Total	Left	Thru	Right	RoR	App. Total	Left	Thru	Right	RoR	App. Total	Int. Total
07:00 AM	0	0	0	0	0	0	0	0	0	0	0	0	0	0	0	0	0	0	0	0	0
07:15 AM	0	0	0	0	0	0	0	0	0	0	0	0	0	0	0	0	0	0	0	0	0
07:30 AM	0	0	0	0	0	0	0	0	0	0	0	0	0	0	0	0	0	0	0	0	0
07:45 AM	0	0	1	0	1	0	1	0	0	1	0	0	0	0	0	0	1	0	0	1	3
Total	0	0	1	0	1	0	1	0	0	1	0	0	0	0	0	0	1	0	0	1	3
08:00 AM	0	1	0	0	1	1	0	0	0	1	0	0	0	0	0	0	0	0	0	0	2
08:15 AM	0	0	0	0	0	0	0	0	0	0	0	0	0	0	0	0	0	0	0	0	0
08:30 AM	0	0	0	0	0	0	0	0	0	0	0	0	0	0	0	0	0	0	0	0	0
08:45 AM	0	0	0	0	0	0	0	0	0	0	0	0	0	0	0	0	0	0	0	0	0
Total	0	1	0	0	1	1	0	0	0	1	0	0	0	0	0	0	0	0	0	0	2
Grand Total	0	1	1	0	2	1	1	0	0	2	0	0	0	0	0	0	1	0	0	1	5
Apprch %	0	50	50	0		50	50	0	0		0	0	0	0		0	100	0	0		
Total %	0	20	20	0	40	20	20	0	0	40	0	0	0	0	0	0	20	0	0	20	

	Haven Avenue Southbound					Foothill Boulevard Westbound					Haven Avenue Northbound					Foothill Boulevard Eastbound					
Start Time	Left	Thru	Right	RoR	App. Total	Left	Thru	Right	RoR	App. Total	Left	Thru	Right	RoR	App. Total	Left	Thru	Right	RoR	App. Total	Int. Total
Peak Hour Analysis From 07:30 AM to 08:15 AM - Peak 1 of 1																					
Peak Hour for Entire Intersection Begins at 07:30 AM																					
07:30 AM	0	0	0	0	0	0	0	0	0	0	0	0	0	0	0	0	0	0	0	0	0
07:45 AM	0	0	1	0	1	0	1	0	0	1	0	0	0	0	0	0	1	0	0	1	3
08:00 AM	0	1	0	0	1	1	0	0	0	1	0	0	0	0	0	0	0	0	0	0	2
08:15 AM	0	0	0	0	0	0	0	0	0	0	0	0	0	0	0	0	0	0	0	0	0
Total Volume	0	1	1	0	2	1	1	0	0	2	0	0	0	0	0	0	1	0	0	1	5
% App. Total	0	50	50	0		50	50	0	0		0	0	0	0		0	100	0	0		
PHF	.000	.250	.250	.000	.500	.250	.250	.000	.000	.500	.000	.000	.000	.000	.000	.000	.250	.000	.000	.250	.417

Counts Unlimited Inc.
25286 Jaclyn Avenue
Moreno Valley, CA 92557
951-485-7934

City of Rancho Cucamonga
N/S: Haven Avenue
E/W: Foothill Boulevard
Weather: Sunny

File Name : RNCHAFOAM
Site Code : 9150093
Start Date : 6/2/2009
Page No : 2

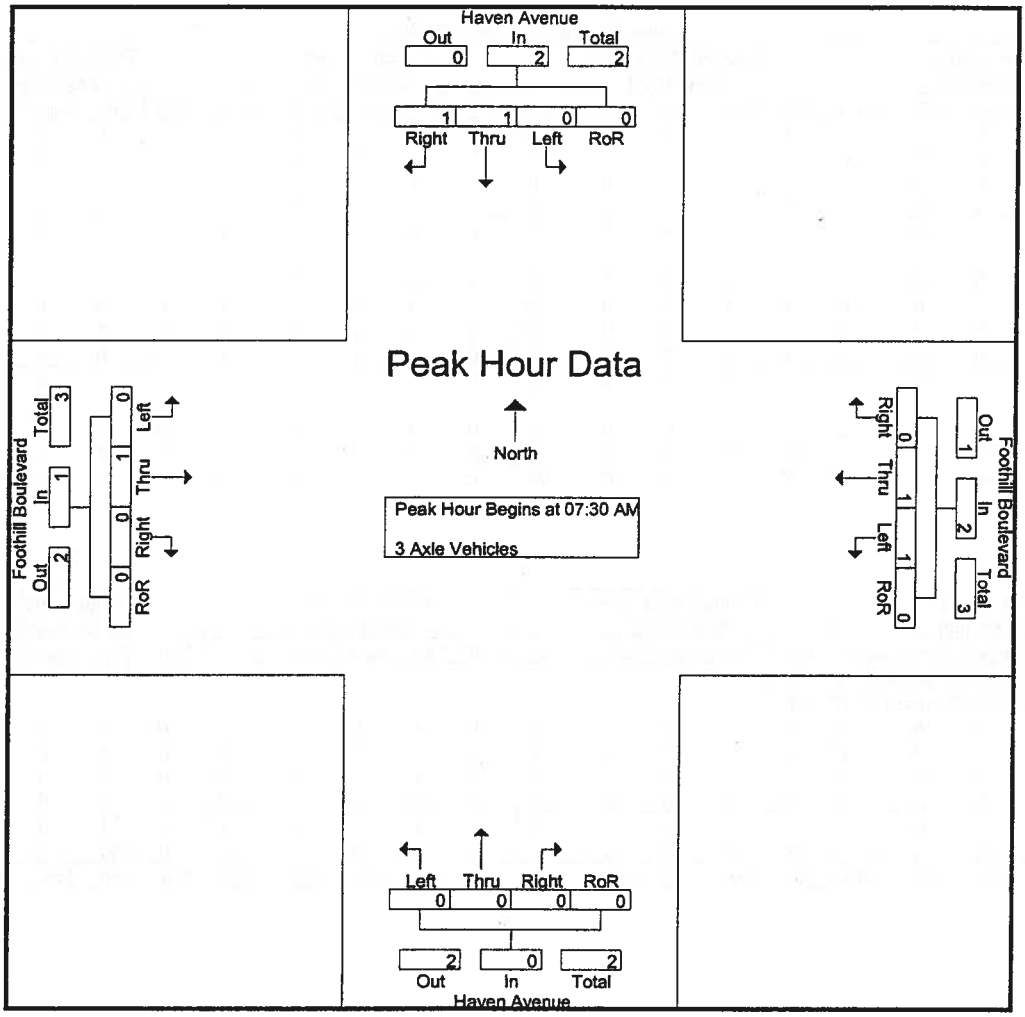

Peak Hour Analysis From 07:30 AM to 08:15 AM - Peak 1 of 1

Peak Hour for Each Approach Begins at:

	07:30 AM					07:30 AM					07:30 AM					07:30 AM				
+0 mins.	0	0	0	0	0	0	0	0	0	0	0	0	0	0	0	0	0	0	0	0
+15 mins.	0	0	1	0	1	0	1	0	0	1	0	0	0	0	0	0	1	0	0	1
+30 mins.	0	1	0	0	1	1	0	0	0	1	0	0	0	0	0	0	0	0	0	0
+45 mins.	0	0	0	0	0	0	0	0	0	0	0	0	0	0	0	0	0	0	0	0
Total Volume	0	1	1	0	2	1	1	0	0	2	0	0	0	0	0	0	1	0	0	1
% App. Total	0	50	50	0		50	50	0	0		0	0	0	0		0	100	0	0	
PHF	.000	.250	.250	.000	.500	.250	.250	.000	.000	.500	.000	.000	.000	.000	.000	.000	.250	.000	.000	.250

Counts Unlimited Inc.
25286 Jaclyn Avenue
Moreno Valley, CA 92557
951-485-7934

City of Rancho Cucamonga
N/S: Haven Avenue
E/W: Foothill Boulevard
Weather: Sunny

File Name : RNCHAFOAM
Site Code : 9150093
Start Date : 6/2/2009
Page No : 1

Groups Printed- 4+ Axle Trucks

	Haven Avenue Southbound					Foothill Boulevard Westbound					Haven Avenue Northbound					Foothill Boulevard Eastbound					
Start Time	Left	Thru	Right	RoR	App. Total	Left	Thru	Right	RoR	App. Total	Left	Thru	Right	RoR	App. Total	Left	Thru	Right	RoR	App. Total	Int. Total
07:00 AM	0	2	0	0	2	1	0	0	0	1	0	0	0	0	0	0	0	0	0	0	3
07:15 AM	0	0	0	0	0	0	0	0	0	0	0	1	0	0	1	0	0	0	0	0	1
07:30 AM	0	1	0	0	1	1	0	0	0	1	0	1	0	0	1	0	0	0	0	0	3
07:45 AM	0	1	0	0	1	1	1	1	0	3	0	0	0	0	0	1	0	0	0	1	5
Total	0	4	0	0	4	3	1	1	0	5	0	2	0	0	2	1	0	0	0	1	12
08:00 AM	0	0	0	0	0	0	0	0	0	0	0	0	0	0	0	0	0	0	0	0	0
08:15 AM	0	2	0	0	2	0	1	1	0	2	0	0	1	0	1	0	0	0	0	0	5
08:30 AM	0	0	0	0	0	0	4	0	0	4	0	0	0	0	0	0	0	0	0	0	4
08:45 AM	0	0	0	1	1	0	0	1	0	1	0	1	0	0	1	0	0	0	0	0	3
Total	0	2	0	1	3	0	5	2	0	7	0	1	1	0	2	0	0	0	0	0	12
Grand Total	0	6	0	1	7	3	6	3	0	12	0	3	1	0	4	1	0	0	0	1	24
Apprch %	0	85.7	0	14.3		25	50	25	0		0	75	25	0		100	0	0	0		
Total %	0	25	0	4.2	29.2	12.5	25	12.5	0	50	0	12.5	4.2	0	16.7	4.2	0	0	0	4.2	

	Haven Avenue Southbound					Foothill Boulevard Westbound					Haven Avenue Northbound					Foothill Boulevard Eastbound					
Start Time	Left	Thru	Right	RoR	App. Total		Thru	Right	RoR	App. Total		Thru	Right	RoR	App. Total		Thru	Right	RoR	App. Total	Int. Total
Peak Hour Analysis From 07:30 AM to 08:15 AM - Peak 1 of 1																					
Peak Hour for Entire Intersection Begins at 07:30 AM																					
07:30 AM	0	1	0	0	1	1	0	0	0	1	0	1	0	0	1	0	0	0	0	0	3
07:45 AM	0	1	0	0	1	1	1	1	0	3	0	0	0	0	0	1	0	0	0	1	5
08:00 AM	0	0	0	0	0	0	0	0	0	0	0	0	0	0	0	0	0	0	0	0	0
08:15 AM	0	2	0	0	2	0	1	1	0	2	0	0	1	0	1	0	0	0	0	0	5
Total Volume	0	4	0	0	4	2	2	2	0	6	0	1	1	0	2	1	0	0	0	1	13
% App. Total	0	100	0	0		33.3	33.3	33.3	0		0	50	50	0		100	0	0	0		
PHF	.000	.500	.000	.000	.500	.500	.500	.500	.000	.500	.000	.250	.250	.000	.500	.250	.000	.000	.000	.250	.650

Counts Unlimited Inc.
25286 Jaclyn Avenue
Moreno Valley, CA 92557
951-485-7934

City of Rancho Cucamonga
N/S: Haven Avenue
E/W: Foothill Boulevard
Weather: Sunny

File Name : RNCHAFOAM
Site Code : 9150093
Start Date : 6/2/2009
Page No : 2

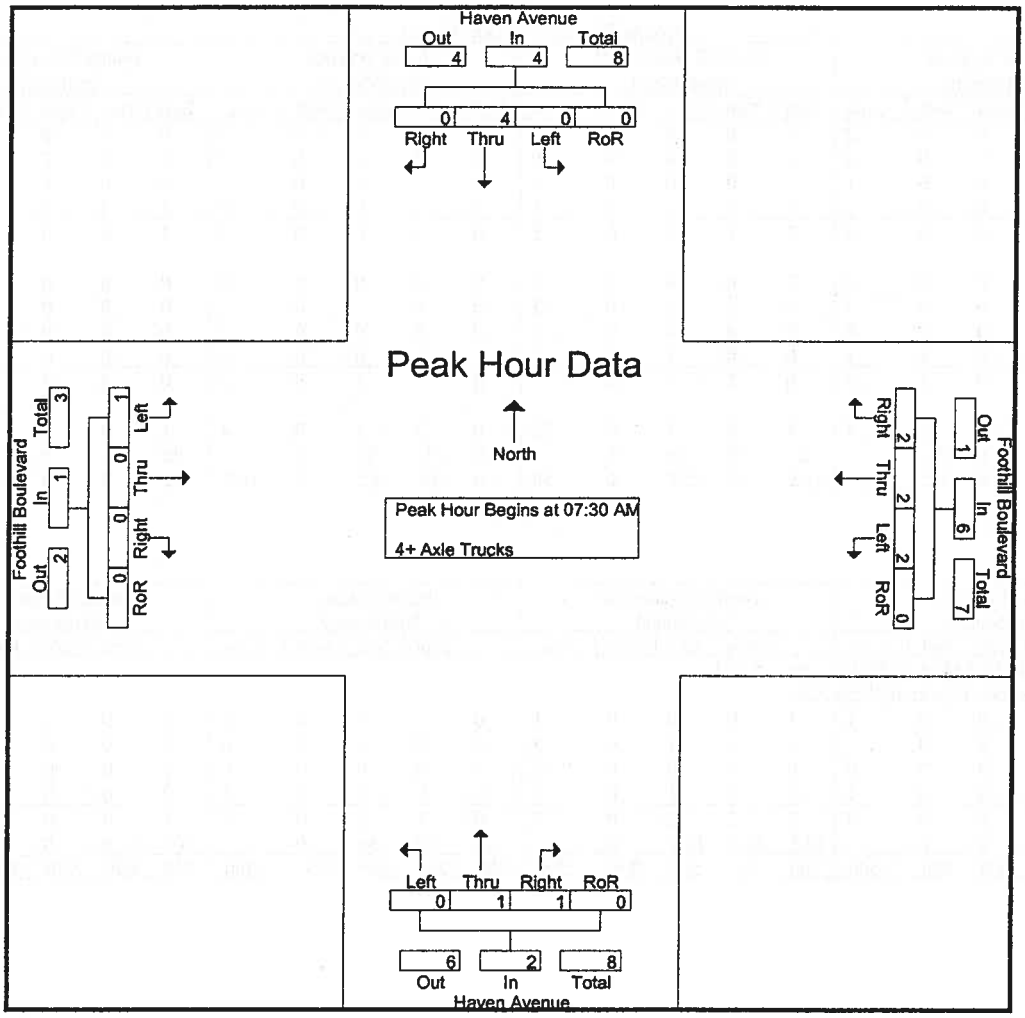

Peak Hour Analysis From 07:30 AM to 08:15 AM - Peak 1 of 1

Peak Hour for Each Approach Begins at:

	07:30 AM					07:30 AM					07:30 AM					07:30 AM				
+0 mins.	0	1	0	0	1	1	0	0	0	1	0	1	0	0	1	0	0	0	0	0
+15 mins.	0	1	0	0	1	1	1	1	0	3	0	0	0	0	0	1	0	0	0	1
+30 mins.	0	0	0	0	0	0	0	0	0	0	0	0	0	0	0	0	0	0	0	0
+45 mins.	0	2	0	0	2	0	1	1	0	2	0	0	1	0	1	0	0	0	0	0
Total Volume	0	4	0	0	4	2	2	2	0	6	0	1	1	0	2	1	0	0	0	1
% App. Total	0	100	0	0		33.3	33.3	33.3	0		0	50	50	0		100	0	0	0	
PHF	.000	.500	.000	.000	.500	.500	.500	.500	.000	.500	.000	.250	.250	.000	.500	.250	.000	.000	.000	.250

Counts Unlimited Inc.
25286 Jaclyn Avenue
Moreno Valley, CA 92557
951-485-7934

City of Rancho Cucamonga
N/S: Haven Avenue
E/W: Foothill Boulevard
Weather: Sunny

File Name : RNCHAFOPM
Site Code : 9150093
Start Date : 6/2/2009
Page No : 1

Groups Printed- Passenger Vehicles - Large 2 Axle Vehicles - 3 Axle Vehicles - 4+ Axle Trucks

	Haven Avenue Southbound					Foothill Boulevard Westbound					Haven Avenue Northbound					Foothill Boulevard Eastbound					
Start Time	Left	Thru	Right	RoR	App. Total	Left	Thru	Right	RoR	App. Total	Left	Thru	Right	RoR	App. Total	Left	Thru	Right	RoR	App. Total	Int. Total
04:00 PM	46	84	9	9	148	46	155	27	17	245	57	219	32	3	311	71	184	7	15	277	981
04:15 PM	52	140	4	5	201	54	139	38	24	255	69	270	60	12	411	86	171	19	32	308	1175
04:30 PM	54	120	2	8	184	65	157	22	31	275	80	308	52	25	465	77	179	24	14	294	1218
04:45 PM	51	115	9	4	179	48	138	22	32	240	53	303	58	17	431	120	222	15	17	374	1224
Total	203	459	24	26	712	213	589	109	104	1015	259	1100	202	57	1618	354	756	65	78	1253	4598
05:00 PM	67	109	0	10	186	59	183	37	19	298	75	353	42	16	486	102	212	15	17	346	1316
05:15 PM	50	121	4	3	178	69	164	35	18	286	73	350	44	10	477	87	190	16	15	308	1249
05:30 PM	52	121	2	4	179	58	127	27	24	236	49	322	57	21	449	100	237	9	11	357	1221
05:45 PM	42	137	2	1	182	59	149	26	24	258	46	272	50	12	380	101	194	11	7	313	1133
Total	211	488	8	18	725	245	623	125	85	1078	243	1297	193	59	1792	390	833	51	50	1324	4919
Grand Total	414	947	32	44	1437	458	1212	234	189	2093	502	2397	395	116	3410	744	1589	116	128	2577	9517
Apprch %	28.8	65.9	2.2	3.1		21.9	57.9	11.2	9		14.7	70.3	11.6	3.4		28.9	61.7	4.5	5		
Total %	4.4	10	0.3	0.5	15.1	4.8	12.7	2.5	2	22	5.3	25.2	4.2	1.2	35.8	7.8	16.7	1.2	1.3	27.1	
Passenger Vehicles							1190					2370					1565				
% Passenger Vehicles	98.1	98.4	96.9	100	98.3	99.3	98.2	98.3	98.9	98.5	98.6	98.9	99.5	99.1	98.9	99.5	98.5	100	95.3	98.7	98.7
Large 2 Axle Vehicles																					
% Large 2 Axle Vehicles	1.9	1.1	3.1	0	1.3	0.4	1.7	1.7	1.1	1.4	1.2	1.1	0.5	0	1	0.4	1.3	0	4.7	1.2	1.2
3 Axle Vehicles	0	0	0	0	0	0	0	0	0	0	0	0	0	0	0	0	0	0	0	0	0
% 3 Axle Vehicles	0	0	0	0	0	0	0	0	0	0	0	0	0	0	0	0	0	0	0	0	0
4+ Axle Trucks	0	5	0	0	5	1	1	0	0	2	1	1	0	1	3	1	3	0	0	4	14
% 4+ Axle Trucks																					

	Haven Avenue Southbound					Foothill Boulevard Westbound					Haven Avenue Northbound					Foothill Boulevard Eastbound					
Start Time	Left	Thru	Right	RoR	App. Total	Left	Thru	Right	RoR	App. Total	Left	Thru	Right	RoR	App. Total	Left	Thru	Right	RoR	App. Total	Int. Total
Peak Hour Analysis From 04:00 PM to 05:45 PM - Peak 1 of 1																					
Peak Hour for Entire Intersection Begins at 04:45 PM																					
04:45 PM	51	115	**9**	4	179	48	138	22	**32**	240	53	303	**58**	17	431	**120**	222	15	**17**	**374**	1224
05:00 PM	**67**	109	0	**10**	**186**	59	**183**	**37**	19	**298**	**75**	**353**	42	16	**486**	102	212	15	17	346	**1316**
05:15 PM	50	**121**	4	3	178	**69**	164	35	18	286	73	350	44	10	477	87	190	**16**	15	308	1249
05:30 PM	52	121	2	4	179	58	127	27	24	236	49	322	57	**21**	449	100	**237**	9	11	357	1221
Total Volume	220	466	15	21	722	234	612	121	93	1060	250	1328	201	64	1843	409	861	55	60	1385	5010
% App. Total	30.5	64.5	2.1	2.9		22.1	57.7	11.4	8.8		13.6	72.1	10.9	3.5		29.5	62.2	4	4.3		
PHF	.821	.963	.417	.525	.970	.848	.836	.818	.727	.889	.833	.941	.866	.762	.948	.852	.908	.859	.882	.926	.952

Counts Unlimited Inc.
25286 Jaclyn Avenue
Moreno Valley, CA 92557
951-485-7934

City of Rancho Cucamonga
N/S: Haven Avenue
E/W: Foothill Boulevard
Weather: Sunny

File Name : RNCHAFOPM
Site Code : 9150093
Start Date : 6/2/2009
Page No : 2

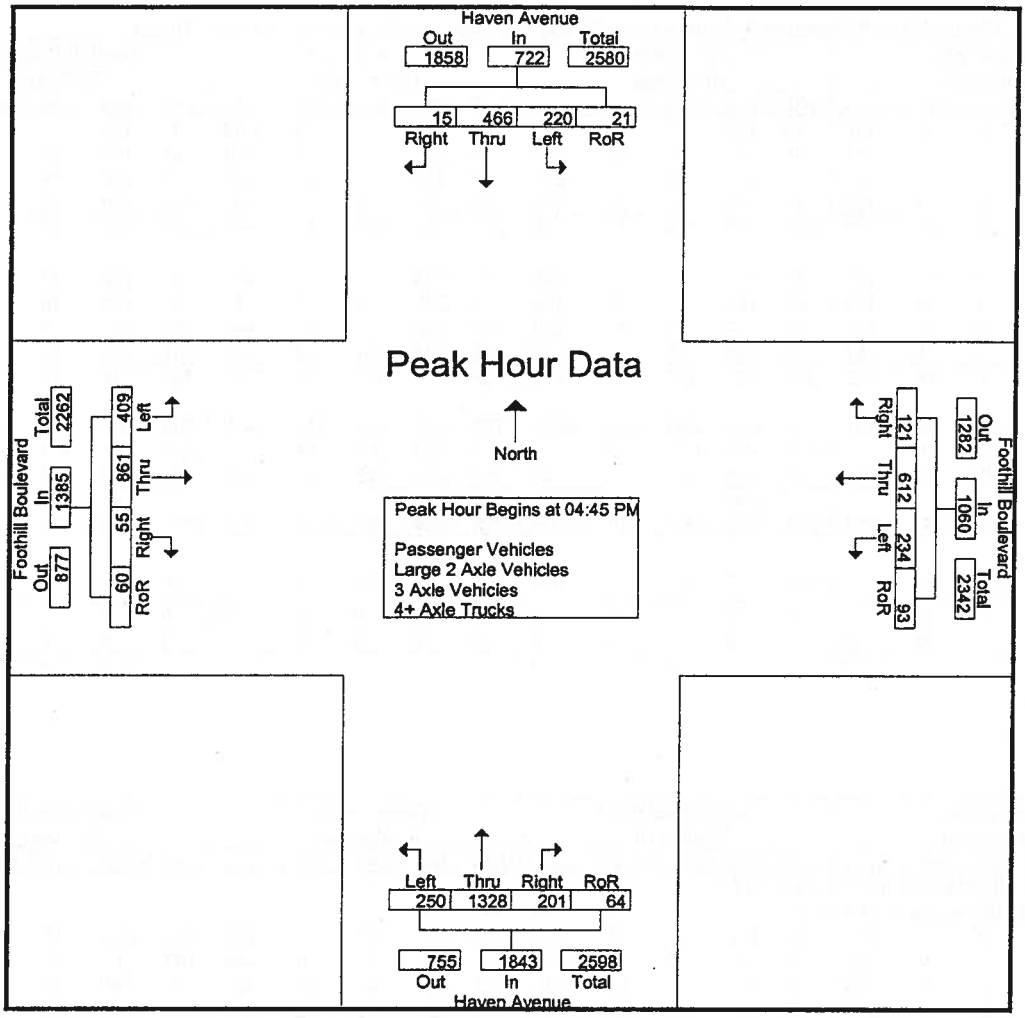

Peak Hour Analysis From 04:00 PM to 05:45 PM - Peak 1 of 1

Peak Hour for Each Approach Begins at:

	04:15 PM					04:30 PM					04:30 PM					04:45 PM				
+0 mins.	52	**140**	4	5	**201**	65	157	22	31	275	**80**	308	52	**25**	465	**120**	222	15	**17**	374
+15 mins.	54	120	2	8	184	48	138	22	**32**	240	53	303	**58**	17	431	102	212	15	17	346
+30 mins.	51	115	9	4	179	59	**183**	**37**	19	**298**	75	**353**	42	16	**486**	87	190	**16**	15	308
+45 mins.	**67**	109	0	**10**	186	**69**	164	35	18	286	73	350	44	10	477	100	**237**	9	11	357
Total Volume	224	484	15	27	750	241	642	116	100	1099	281	1314	196	68	1859	409	861	55	60	1385
% App. Total	29.9	64.5	2	3.6		21.9	58.4	10.6	9.1		15.1	70.7	10.5	3.7		29.5	62.2	4	4.3	
PHF	.836	.864	.417	.675	.933	.873	.877	.784	.781	.922	.878	.931	.845	.680	.956	.852	.908	.859	.882	.926

Counts Unlimited Inc.
25286 Jaclyn Avenue
Moreno Valley, CA 92557
951-485-7934

City of Rancho Cucamonga
N/S: Haven Avenue
E/W: Foothill Boulevard
Weather: Sunny

File Name : RNCHAFOPM
Site Code : 9150093
Start Date : 6/2/2009
Page No : 1

Groups Printed- Passenger Vehicles

	Haven Avenue Southbound					Foothill Boulevard Westbound					Haven Avenue Northbound					Foothill Boulevard Eastbound					
Start Time	Left	Thru	Right	RoR	App. Total	Left	Thru	Right	RoR	App. Total	Left	Thru	Right	RoR	App. Total	Left	Thru	Right	RoR	App. Total	Int. Total
04:00 PM	46	83	9	9	147	46	151	27	17	241	56	217	32	3	308	70	179	7	11	267	963
04:15 PM	50	139	4	5	198	54	138	38	24	254	69	267	59	12	407	85	166	19	30	300	1159
04:30 PM	54	116	1	8	179	64	155	22	30	271	78	302	52	25	457	77	176	24	14	291	1198
04:45 PM	49	115	9	4	177	47	136	22	32	237	52	302	58	16	428	119	221	15	17	372	1214
Total	199	453	23	26	701	211	580	109	103	1003	255	1088	201	56	1600	351	742	65	72	1230	4534
05:00 PM	65	109	0	10	184	59	178	35	19	291	73	349	42	16	480	102	210	15	17	344	1299
05:15 PM	49	119	4	3	175	68	159	35	18	280	72	347	44	10	473	86	187	16	15	304	1232
05:30 PM	52	118	2	4	176	58	126	25	23	232	49	319	57	21	446	100	235	9	11	355	1209
05:45 PM	41	133	2	1	177	59	147	26	24	256	46	267	49	12	374	101	191	11	7	310	1117
Total	207	479	8	18	712	244	610	121	84	1059	240	1282	192	59	1773	389	823	51	50	1313	4857
Grand Total	406	932	31	44	1413	455	1190	230	187	2062	495	2370	393	115	3373	740	1565	116	122	2543	9391
Apprch %	28.7	66	2.2	3.1		22.1	57.7	11.2	9.1		14.7	70.3	11.7	3.4		29.1	61.5	4.6	4.8		
Total %	4.3	9.9	0.3	0.5	15	4.8	12.7	2.4	2	22	5.3	25.2	4.2	1.2	35.9	7.9	16.7	1.2	1.3	27.1	

	Haven Avenue Southbound					Foothill Boulevard Westbound					Haven Avenue Northbound					Foothill Boulevard Eastbound					
Start Time	Left	Thru	Right	RoR	App. Total		Thru	Right	RoR	App. Total		Thru	Right	RoR	App. Total		Thru	Right	RoR	App. Total	Int. Total
Peak Hour Analysis From 04:45 PM to 05:30 PM - Peak 1 of 1																					
Peak Hour for Entire Intersection Begins at 04:45 PM																					
04:45 PM	49	115	9	4	177	47	136	22	32	237	52	302	58	16	428	119	221	15	17	372	1214
05:00 PM	65	109	0	10	184	59	178	35	19	291	73	349	42	16	480	102	210	15	17	344	1299
05:15 PM	49	119	4	3	175	68	159	35	18	280	72	347	44	10	473	86	187	16	15	304	1232
05:30 PM	52	118	2	4	176	58	126	25	23	232	49	319	57	21	446	100	235	9	11	355	1209
Total Volume	215	461	15	21	712	232	599	117	92	1040	246	1317	201	63	1827	407	853	55	60	1375	4954
% App. Total	30.2	64.7	2.1	2.9		22.3	57.6	11.2	8.8		13.5	72.1	11	3.4		29.6	62	4	4.4		
PHF	.827	.968	.417	.525	.967	.853	.841	.836	.719	.893	.842	.943	.866	.750	.952	.855	.907	.859	.882	.924	.953

Counts Unlimited Inc.
25286 Jaclyn Avenue
Moreno Valley, CA 92557
951-485-7934

City of Rancho Cucamonga
N/S: Haven Avenue
E/W: Foothill Boulevard
Weather: Sunny

File Name : RNCHAFOPM
Site Code : 9150093
Start Date : 6/2/2009
Page No : 2

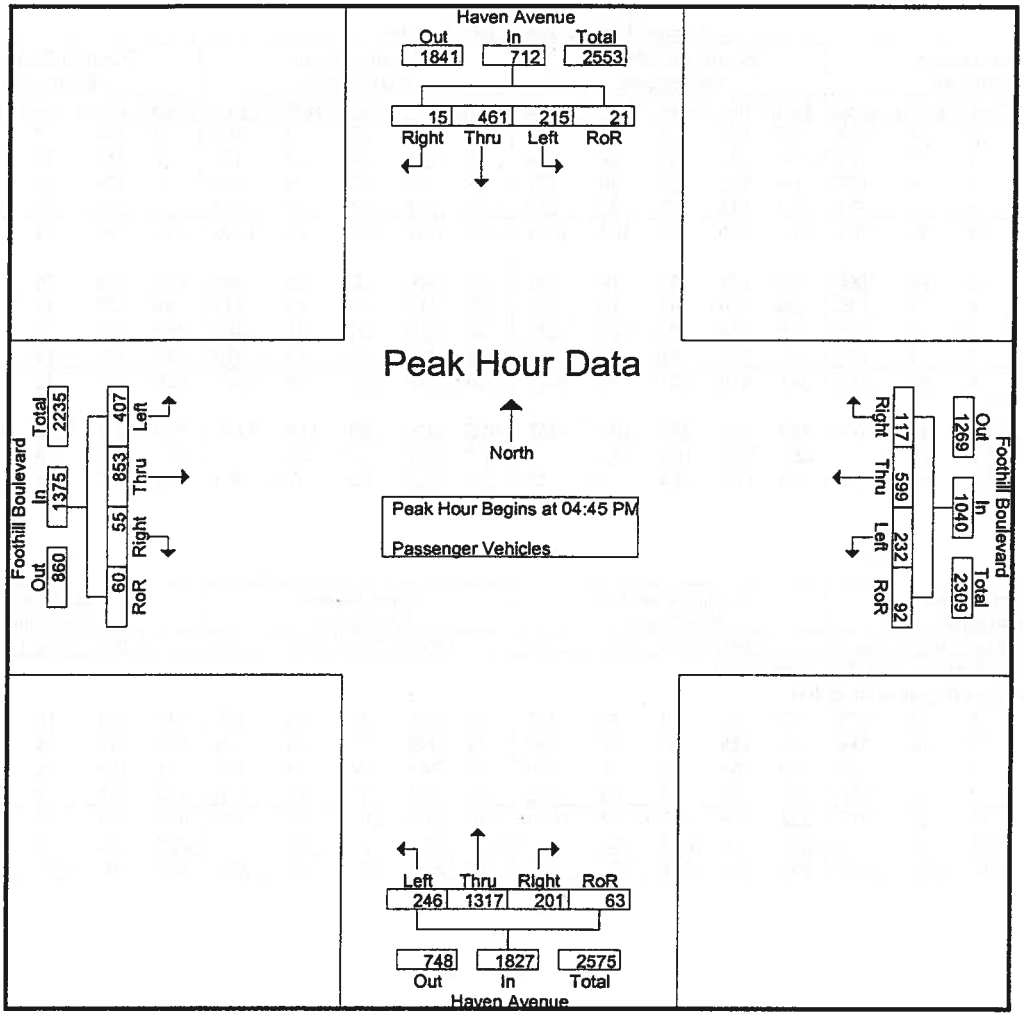

Peak Hour Analysis From 04:45 PM to 05:30 PM - Peak 1 of 1

Peak Hour for Each Approach Begins at:

	04:45 PM					04:45 PM					04:45 PM					04:45 PM				
+0 mins.	49	115	9	4	177	47	136	22	**32**	237	52	302	**58**	16	428	**119**	221	15	**17**	**372**
+15 mins.	**65**	109	0	**10**	**184**	59	**178**	**35**	19	**291**	**73**	**349**	42	16	**480**	102	210	15	17	344
+30 mins.	49	**119**	4	3	175	**68**	159	35	18	280	72	347	44	10	473	86	187	**16**	15	304
+45 mins.	52	118	2	4	176	58	126	25	23	232	49	319	57	**21**	446	100	**235**	9	11	355
Total Volume	215	461	15	21	712	232	599	117	92	1040	246	1317	201	63	1827	407	853	55	60	1375
% App. Total	30.2	64.7	2.1	2.9		22.3	57.6	11.2	8.8		13.5	72.1	11	3.4		29.6	62	4	4.4	
PHF	.827	.968	.417	.525	.967	.853	.841	.836	.719	.893	.842	.943	.866	.750	.952	.855	.907	.859	.882	.924

Counts Unlimited Inc.
25286 Jaclyn Avenue
Moreno Valley, CA 92557
951-485-7934

City of Rancho Cucamonga
N/S: Haven Avenue
E/W: Foothill Boulevard
Weather: Sunny

File Name : RNCHAFOPM
Site Code : 9150093
Start Date : 6/2/2009
Page No : 1

Groups Printed- Large 2 Axle Vehicles

	Haven Avenue Southbound					Foothill Boulevard Westbound					Haven Avenue Northbound					Foothill Boulevard Eastbound					
Start Time	Left	Thru	Right	RoR	App. Total	Left	Thru	Right	RoR	App. Total	Left	Thru	Right	RoR	App. Total	Left	Thru	Right	RoR	App. Total	Int. Total
04:00 PM	0	1	0	0	1	0	4	0	0	4	0	2	0	0	2	1	5	0	4	10	17
04:15 PM	2	1	0	0	3	0	1	0	0	1	0	3	1	0	4	1	3	0	2	6	14
04:30 PM	0	4	1	0	5	1	2	0	1	4	2	6	0	0	8	0	3	0	0	3	20
04:45 PM	2	0	0	0	2	0	2	0	0	2	1	1	0	0	2	0	1	0	0	1	7
Total	4	6	1	0	11	1	9	0	1	11	3	12	1	0	16	2	12	0	6	20	58
05:00 PM	2	0	0	0	2	0	4	2	0	6	2	4	0	0	6	0	2	0	0	2	16
05:15 PM	1	1	0	0	2	1	5	0	0	6	1	3	0	0	4	1	3	0	0	4	16
05:30 PM	0	1	0	0	1	0	1	2	1	4	0	3	0	0	3	0	2	0	0	2	10
05:45 PM	1	2	0	0	3	0	2	0	0	2	0	4	1	0	5	0	2	0	0	2	12
Total	4	4	0	0	8	1	12	4	1	18	3	14	1	0	18	1	9	0	0	10	54
Grand Total	8	10	1	0	19	2	21	4	2	29	6	26	2	0	34	3	21	0	6	30	112
Apprch %	42.1	52.6	5.3	0		6.9	72.4	13.8	6.9		17.6	76.5	5.9	0		10	70	0	20		
Total %	7.1	8.9	0.9	0	17	1.8	18.8	3.6	1.8	25.9	5.4	23.2	1.8	0	30.4	2.7	18.8	0	5.4	26.8	

	Haven Avenue Southbound					Foothill Boulevard Westbound					Haven Avenue Northbound					Foothill Boulevard Eastbound					
Start Time	Left	Thru	Right	RoR	App. Total		Thru	Right	RoR	App. Total		Thru	Right	RoR	App. Total		Thru	Right	RoR	App. Total	Int. Total
Peak Hour Analysis From 04:45 PM to 05:30 PM - Peak 1 of 1																					
Peak Hour for Entire Intersection Begins at 04:45 PM																					
04:45 PM	2	0	0	0	2	0	2	0	0	2	1	1	0	0	2	0	1	0	0	1	7
05:00 PM	2	0	0	0	2	0	4	2	0	6	2	4	0	0	6	0	2	0	0	2	16
05:15 PM	1	1	0	0	2	1	5	0	0	6	1	3	0	0	4	1	3	0	0	4	16
05:30 PM	0	1	0	0	1	0	1	2	1	4	0	3	0	0	3	0	2	0	0	2	10
Total Volume	5	2	0	0	7	1	12	4	1	18	4	11	0	0	15	1	8	0	0	9	49
% App. Total	71.4	28.6	0	0		5.6	66.7	22.2	5.6		26.7	73.3	0	0		11.1	88.9	0	0		
PHF	.625	.500	.000	.000	.875	.250	.600	.500	.250	.750	.500	.688	.000	.000	.625	.250	.667	.000	.000	.563	.766

Counts Unlimited Inc.
25286 Jaclyn Avenue
Moreno Valley, CA 92557
951-485-7934

City of Rancho Cucamonga
N/S: Haven Avenue
E/W: Foothill Boulevard
Weather: Sunny

File Name : RNCHAFOPM
Site Code : 9150093
Start Date : 6/2/2009

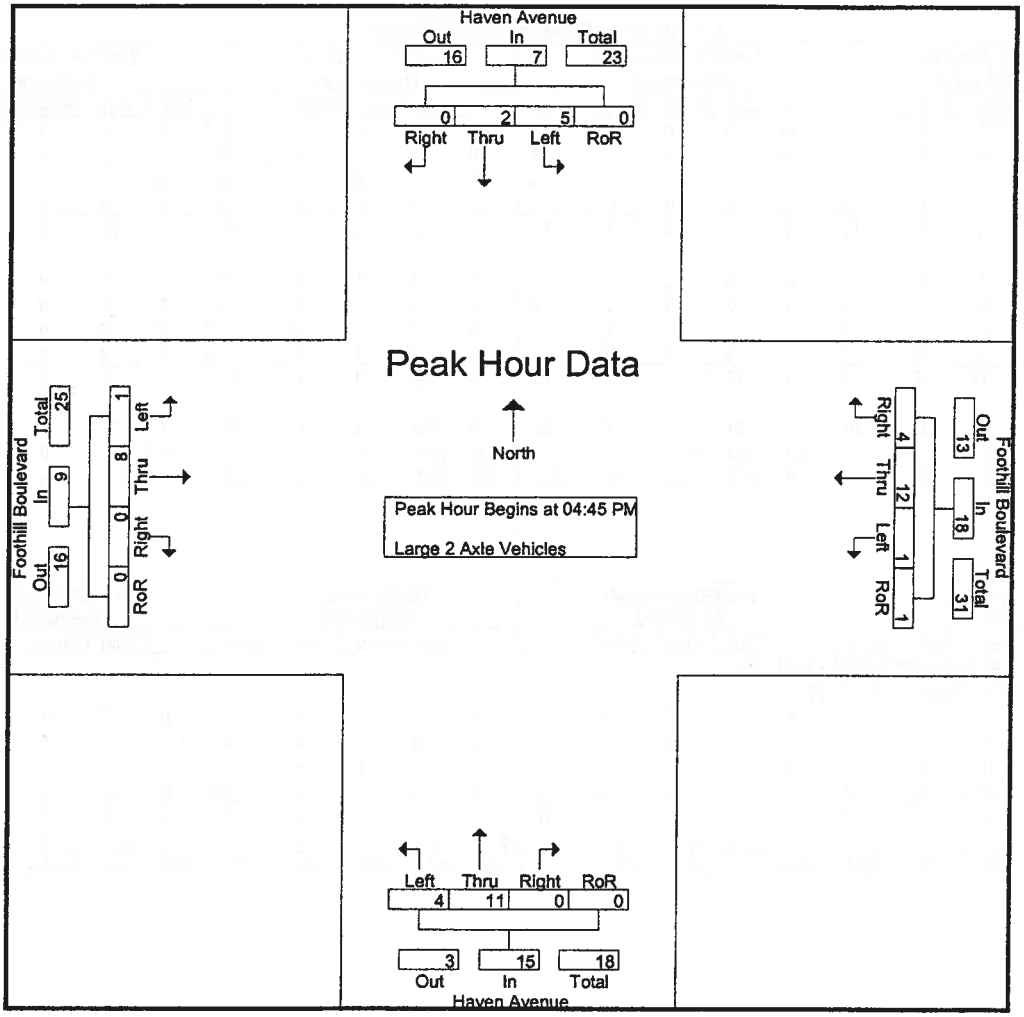

Peak Hour Analysis From 04:45 PM to 05:30 PM - Peak 1 of 1

Peak Hour for Each Approach Begins at:

	04:45 PM					04:45 PM					04:45 PM					04:45 PM				
+0 mins.	2	0	0	0	2	0	2	0	0	2	1	1	0	0	2	0	1	0	0	1
+15 mins.	2	0	0	0	2	0	4	2	0	6	2	4	0	0	6	0	2	0	0	2
+30 mins.	1	1	0	0	2	1	5	0	0	6	1	3	0	0	4	1	3	0	0	4
+45 mins.	0	1	0	0	1	0	1	2	1	4	0	3	0	0	3	0	2	0	0	2
Total Volume	5	2	0	0	7	1	12	4	1	18	4	11	0	0	15	1	8	0	0	9
% App. Total	71.4	28.6	0	0		5.6	66.7	22.2	5.6		26.7	73.3	0	0		11.1	88.9	0	0	
PHF	.625	.500	.000	.000	.875	.250	.600	.500	.250	.750	.500	.688	.000	.000	.625	.250	.667	.000	.000	.563

Counts Unlimited Inc.
25286 Jaclyn Avenue
Moreno Valley, CA 92557
951-485-7934

City of Rancho Cucamonga
N/S: Haven Avenue
E/W: Foothill Boulevard
Weather: Sunny

File Name : RNCHAFOPM
Site Code : 9150093
Start Date : 6/2/2009
Page No : 1

Groups Printed- 3 Axle Vehicles

	Haven Avenue Southbound					Foothill Boulevard Westbound					Haven Avenue Northbound					Foothill Boulevard Eastbound					
Start Time	Left	Thru	Right	RoR	App. Total	Left	Thru	Right	RoR	App. Total	Left	Thru	Right	RoR	App. Total	Left	Thru	Right	RoR	App. Total	Int. Total
04:00 PM	0	0	0	0	0	0	0	0	0	0	0	0	0	0	0	0	0	0	0	0	0
04:15 PM	0	0	0	0	0	0	0	0	0	0	0	0	0	0	0	0	0	0	0	0	0
04:30 PM	0	0	0	0	0	0	0	0	0	0	0	0	0	0	0	0	0	0	0	0	0
04:45 PM	0	0	0	0	0	0	0	0	0	0	0	0	0	0	0	0	0	0	0	0	0
Total	0	0	0	0	0	0	0	0	0	0	0	0	0	0	0	0	0	0	0	0	0
05:00 PM	0	0	0	0	0	0	0	0	0	0	0	0	0	0	0	0	0	0	0	0	0
05:15 PM	0	0	0	0	0	0	0	0	0	0	0	0	0	0	0	0	0	0	0	0	0
05:30 PM	0	0	0	0	0	0	0	0	0	0	0	0	0	0	0	0	0	0	0	0	0
05:45 PM	0	0	0	0	0	0	0	0	0	0	0	0	0	0	0	0	0	0	0	0	0
Total	0	0	0	0	0	0	0	0	0	0	0	0	0	0	0	0	0	0	0	0	0
Grand Total	0	0	0	0	0	0	0	0	0	0	0	0	0	0	0	0	0	0	0	0	0
Apprch %	0	0	0	0		0	0	0	0		0	0	0	0		0	0	0	0		
Total %																					

	Haven Avenue Southbound					Foothill Boulevard Westbound					Haven Avenue Northbound					Foothill Boulevard Eastbound					
Start Time	Left	Thru	Right	RoR	App. Total	Left	Thru	Right	RoR	App. Total	Left	Thru	Right	RoR	App. Total	Left	Thru	Right	RoR	App. Total	Int. Total
Peak Hour Analysis From 04:45 PM to 05:30 PM - Peak 1 of 1																					
Peak Hour for Entire Intersection Begins at 04:45 PM																					
04:45 PM	0	0	0	0	0	0	0	0	0	0	0	0	0	0	0	0	0	0	0	0	0
05:00 PM	0	0	0	0	0	0	0	0	0	0	0	0	0	0	0	0	0	0	0	0	0
05:15 PM	0	0	0	0	0	0	0	0	0	0	0	0	0	0	0	0	0	0	0	0	0
05:30 PM	0	0	0	0	0	0	0	0	0	0	0	0	0	0	0	0	0	0	0	0	0
Total Volume	0	0	0	0	0	0	0	0	0	0	0	0	0	0	0	0	0	0	0	0	0
% App. Total	0	0	0	0		0	0	0	0		0	0	0	0		0	0	0	0		
PHF	.000	.000	.000	.000	.000	.000	.000	.000	.000	.000	.000	.000	.000	.000	.000	.000	.000	.000	.000	.000	.000

Counts Unlimited Inc.
25286 Jaclyn Avenue
Moreno Valley, CA 92557
951-485-7934

City of Rancho Cucamonga
N/S: Haven Avenue
E/W: Foothill Boulevard
Weather: Sunny

File Name : RNCHAFOPM
Site Code : 9150093
Start Date : 6/2/2009
Page No : 2

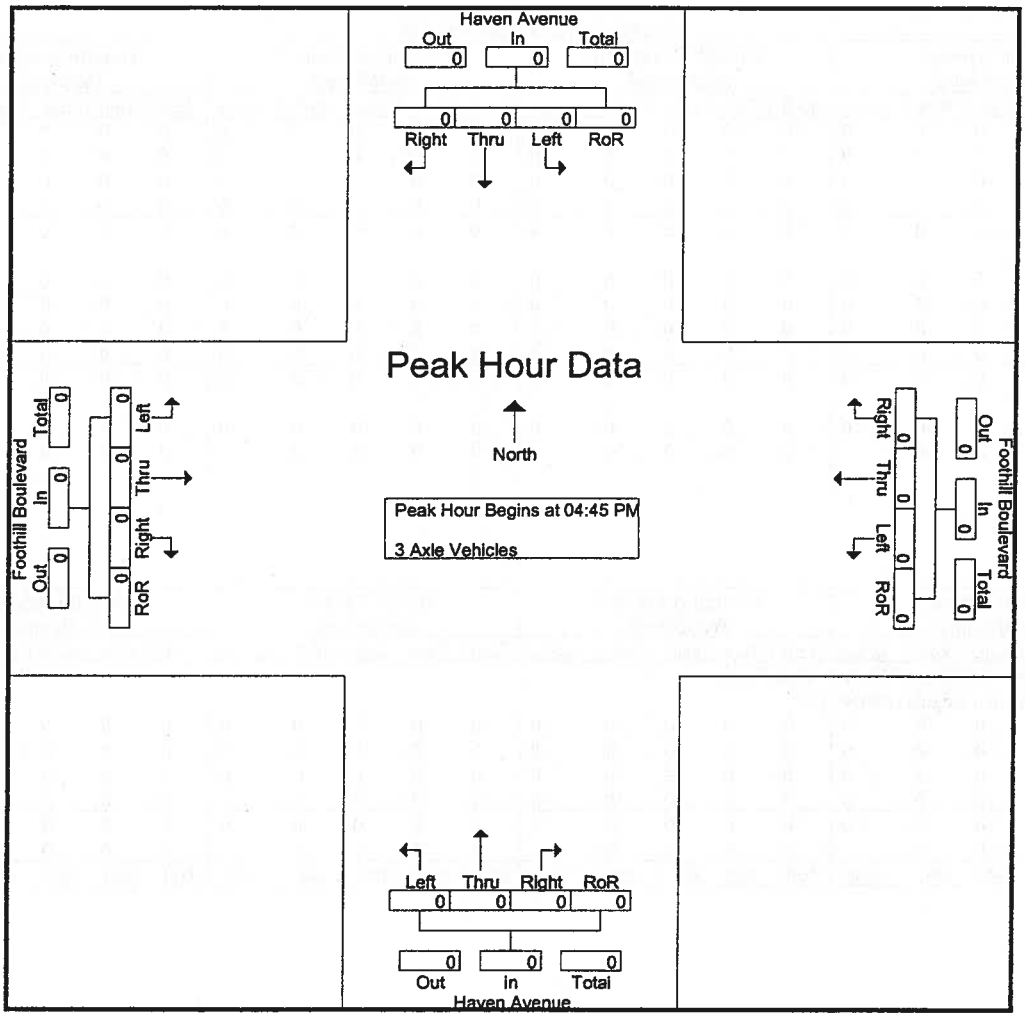

Peak Hour Analysis From 04:45 PM to 05:30 PM - Peak 1 of 1

Peak Hour for Each Approach Begins at:

	04:45 PM					04:45 PM					04:45 PM					04:45 PM				
+0 mins.	0	0	0	0	0	0	0	0	0	0	0	0	0	0	0	0	0	0	0	0
+15 mins.	0	0	0	0	0	0	0	0	0	0	0	0	0	0	0	0	0	0	0	0
+30 mins.	0	0	0	0	0	0	0	0	0	0	0	0	0	0	0	0	0	0	0	0
+45 mins.	0	0	0	0	0	0	0	0	0	0	0	0	0	0	0	0	0	0	0	0
Total Volume	0	0	0	0	0	0	0	0	0	0	0	0	0	0	0	0	0	0	0	0
% App. Total	0	0	0	0		0	0	0	0		0	0	0	0		0	0	0	0	
PHF	.000	.000	.000	.000	.000	.000	.000	.000	.000	.000	.000	.000	.000	.000	.000	.000	.000	.000	.000	.000

Counts Unlimited Inc.
25286 Jaclyn Avenue
Moreno Valley, CA 92557
951-485-7934

City of Rancho Cucamonga
N/S: Haven Avenue
E/W: Foothill Boulevard
Weather: Sunny

File Name : RNCHAFOPM
Site Code : 9150093
Start Date : 6/2/2009
Page No : 1

Groups Printed- 4+ Axle Trucks

	Haven Avenue Southbound					Foothill Boulevard Westbound					Haven Avenue Northbound					Foothill Boulevard Eastbound					
Start Time	Left	Thru	Right	RoR	App. Total	Left	Thru	Right	RoR	App. Total	Left	Thru	Right	RoR	App. Total	Left	Thru	Right	RoR	App. Total	Int. Total
04:00 PM	0	0	0	0	0	0	0	0	0	0	1	0	0	0	1	0	0	0	0	0	1
04:15 PM	0	0	0	0	0	0	0	0	0	0	0	0	0	0	0	0	2	0	0	2	2
04:30 PM	0	0	0	0	0	0	0	0	0	0	0	0	0	0	0	0	0	0	0	0	0
04:45 PM	0	0	0	0	0	1	0	0	0	1	0	0	0	1	1	1	0	0	0	1	3
Total	0	0	0	0	0	1	0	0	0	1	1	0	0	1	2	1	2	0	0	3	6
05:00 PM	0	0	0	0	0	0	1	0	0	1	0	0	0	0	0	0	0	0	0	0	1
05:15 PM	0	1	0	0	1	0	0	0	0	0	0	0	0	0	0	0	0	0	0	0	1
05:30 PM	0	2	0	0	2	0	0	0	0	0	0	0	0	0	0	0	0	0	0	0	2
05:45 PM	0	2	0	0	2	0	0	0	0	0	0	1	0	0	1	0	1	0	0	1	4
Total	0	5	0	0	5	0	1	0	0	1	0	1	0	0	1	0	1	0	0	1	8
Grand Total	0	5	0	0	5	1	1	0	0	2	1	1	0	1	3	1	3	0	0	4	14
Apprch %	0	100	0	0		50	50	0	0		33.3	33.3	0	33.3		25	75	0	0		
Total %	0	35.7	0	0	35.7	7.1	7.1	0	0	14.3	7.1	7.1	0	7.1	21.4	7.1	21.4	0	0	28.6	

	Haven Avenue Southbound					Foothill Boulevard Westbound					Haven Avenue Northbound					Foothill Boulevard Eastbound					
Start Time	Left	Thru	Right	RoR	App. Total		Thru	Right	RoR	App. Total		Thru	Right	RoR	App. Total		Thru	Right	RoR	App. Total	Int. Total
Peak Hour Analysis From 04:45 PM to 05:30 PM - Peak 1 of 1																					
Peak Hour for Entire Intersection Begins at 04:45 PM																					
04:45 PM	0	0	0	0	0	1	0	0	0	1	0	0	0	1	1	1	0	0	0	1	3
05:00 PM	0	0	0	0	0	0	1	0	0	1	0	0	0	0	0	0	0	0	0	0	1
05:15 PM	0	1	0	0	1	0	0	0	0	0	0	0	0	0	0	0	0	0	0	0	1
05:30 PM	0	2	0	0	2	0	0	0	0	0	0	0	0	0	0	0	0	0	0	0	2
Total Volume	0	3	0	0	3	1	1	0	0	2	0	0	0	1	1	1	0	0	0	1	7
% App. Total	0	100	0	0		50	50	0	0		0	0	0	100		100	0	0	0		
PHF	.000	.375	.000	.000	.375	.250	.250	.000	.000	.500	.000	.000	.000	.250	.250	.250	.000	.000	.000	.250	.583

Counts Unlimited Inc.
25286 Jaclyn Avenue
Moreno Valley, CA 92557
951-485-7934

City of Rancho Cucamonga
N/S: Haven Avenue
E/W: Foothill Boulevard
Weather: Sunny

File Name : RNCHAFOPM
Site Code : 9150093
Start Date : 6/2/2009
Page No : 2

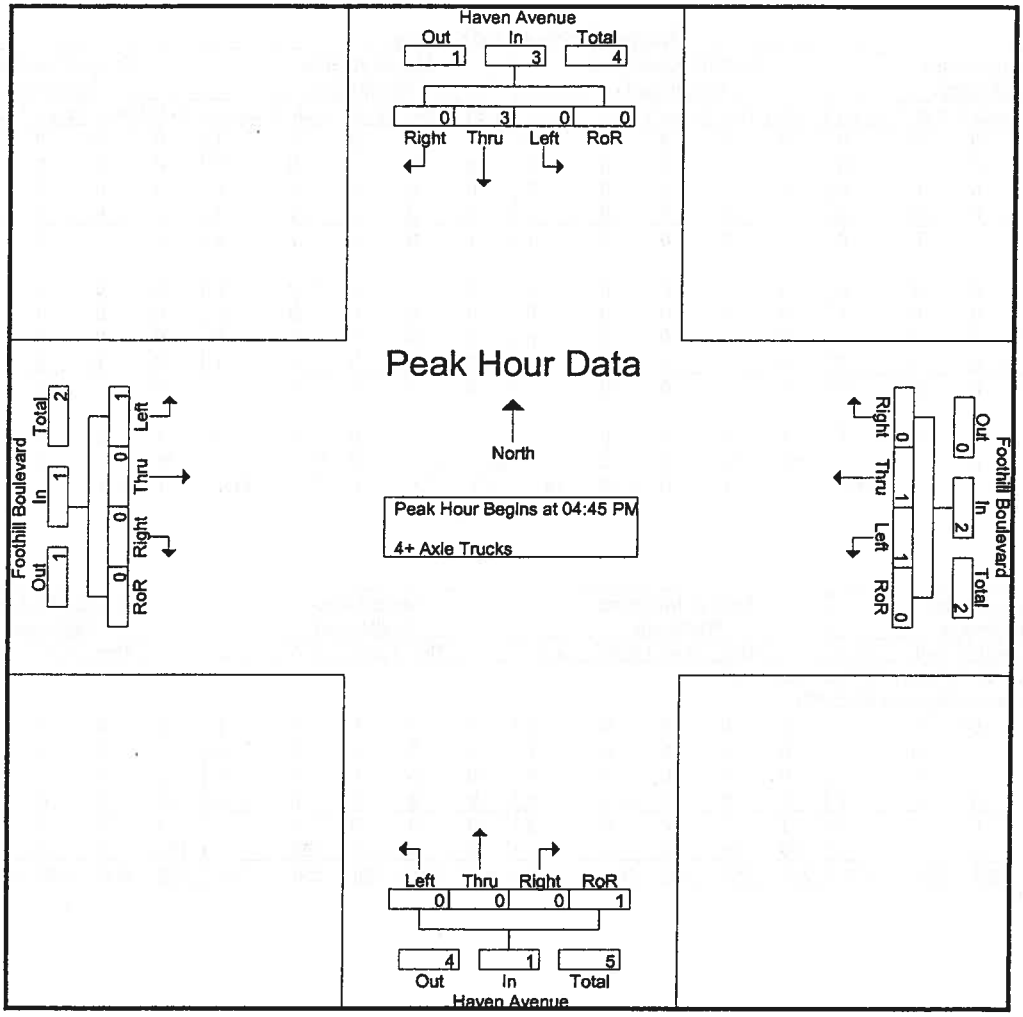

Peak Hour Analysis From 04:45 PM to 05:30 PM - Peak 1 of 1

Peak Hour for Each Approach Begins at:

	04:45 PM					04:45 PM					04:45 PM					04:45 PM				
+0 mins.	0	0	0	0	0	1	0	0	0	1	0	0	0	1	1	1	0	0	0	1
+15 mins.	0	0	0	0	0	0	1	0	0	1	0	0	0	0	0	0	0	0	0	0
+30 mins.	0	1	0	0	1	0	0	0	0	0	0	0	0	0	0	0	0	0	0	0
+45 mins.	0	2	0	0	2	0	0	0	0	0	0	0	0	0	0	0	0	0	0	0
Total Volume	0	3	0	0	3	1	1	0	0	2	0	0	0	1	1	1	0	0	0	1
% App. Total	0	100	0	0		50	50	0	0		0	0	0	100		100	0	0	0	
PHF	.000	.375	.000	.000	.375	.250	.250	.000	.000	.500	.000	.000	.000	.250	.250	.250	.000	.000	.000	.250

PASSENGER CAR EQUIVALENCY PEAK HOUR COUNT SUMMARY

INTERSECTION 14
Haven Avenue (NS) / Arrow Highway (EW)

AM PEAK HOUR

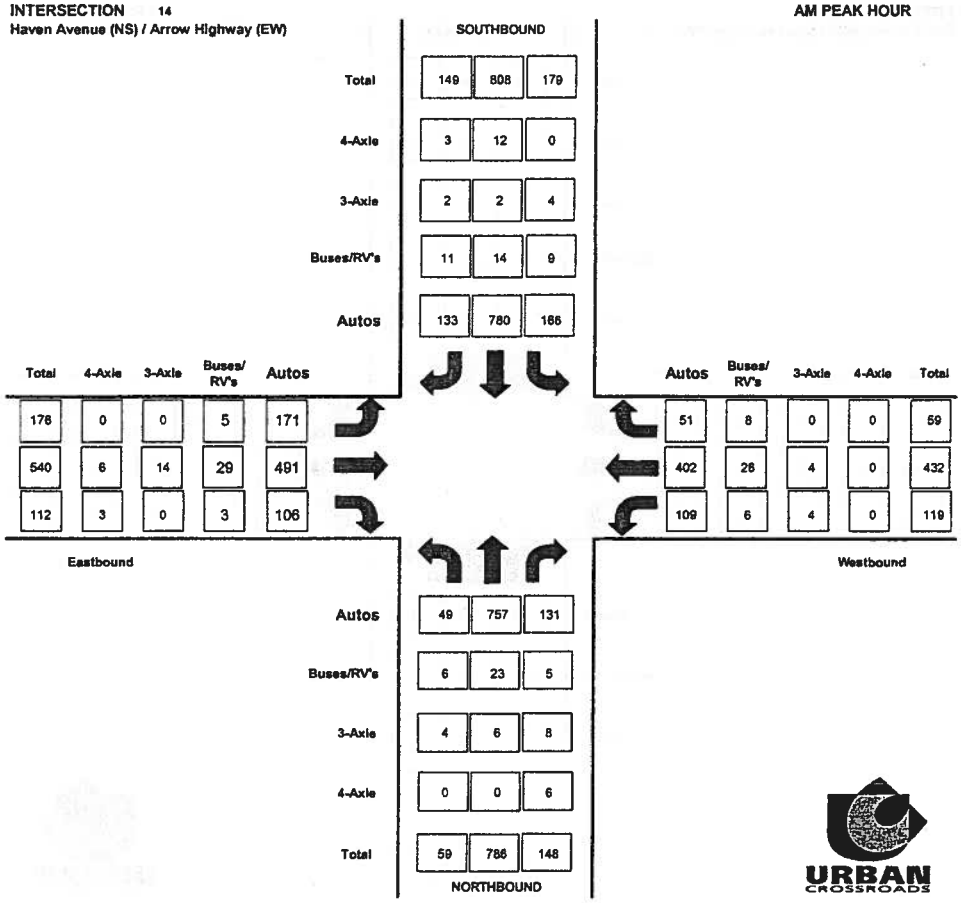

INTERSECTION 14
Haven Avenue (NS) / Arrow Highway (EW)

PM PEAK HOUR

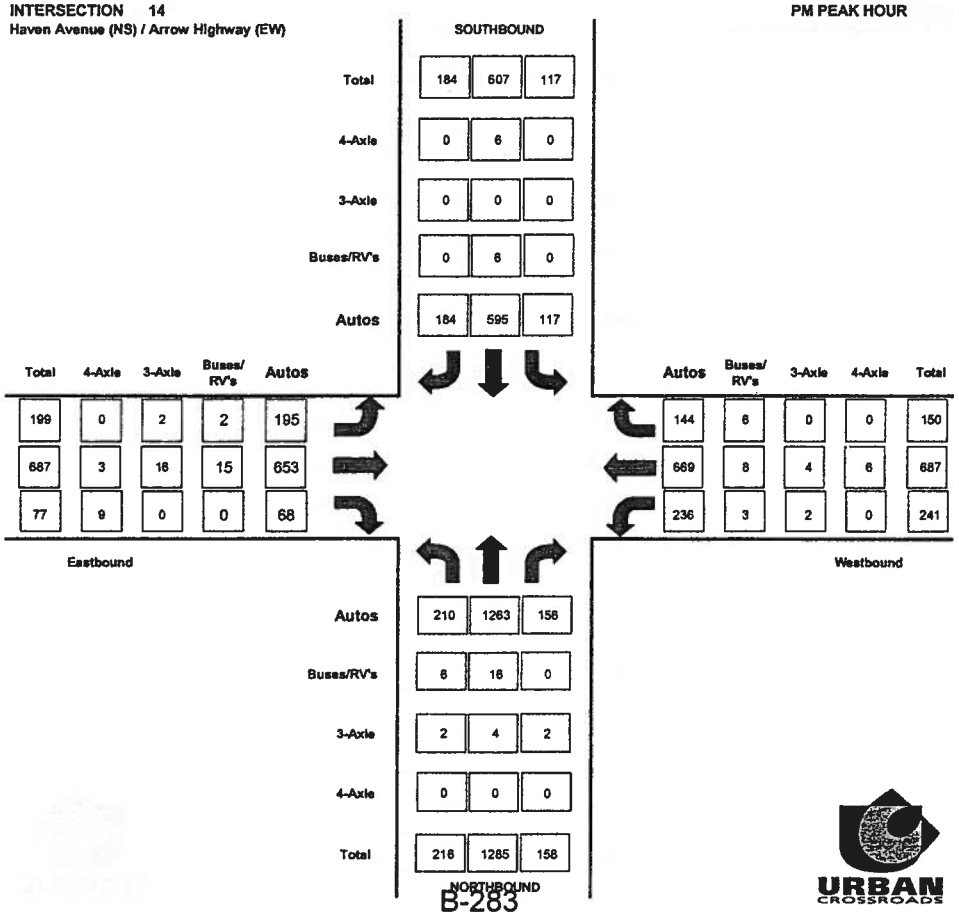

RAW PEAK HOUR COUNT SUMMARY

INTERSECTION 14
Haven Avenue (NS) / Arrow Highway (EW)

AM PEAK HOUR

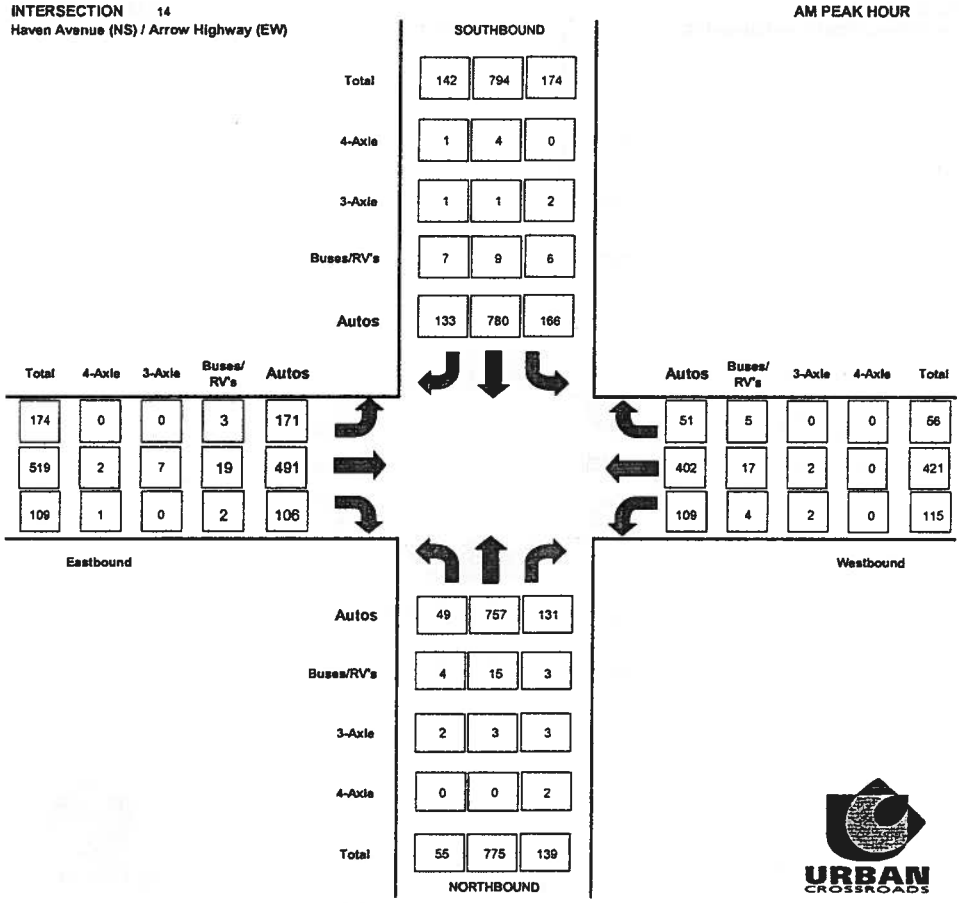

INTERSECTION 14
Haven Avenue (NS) / Arrow Highway (EW)

PM PEAK HOUR

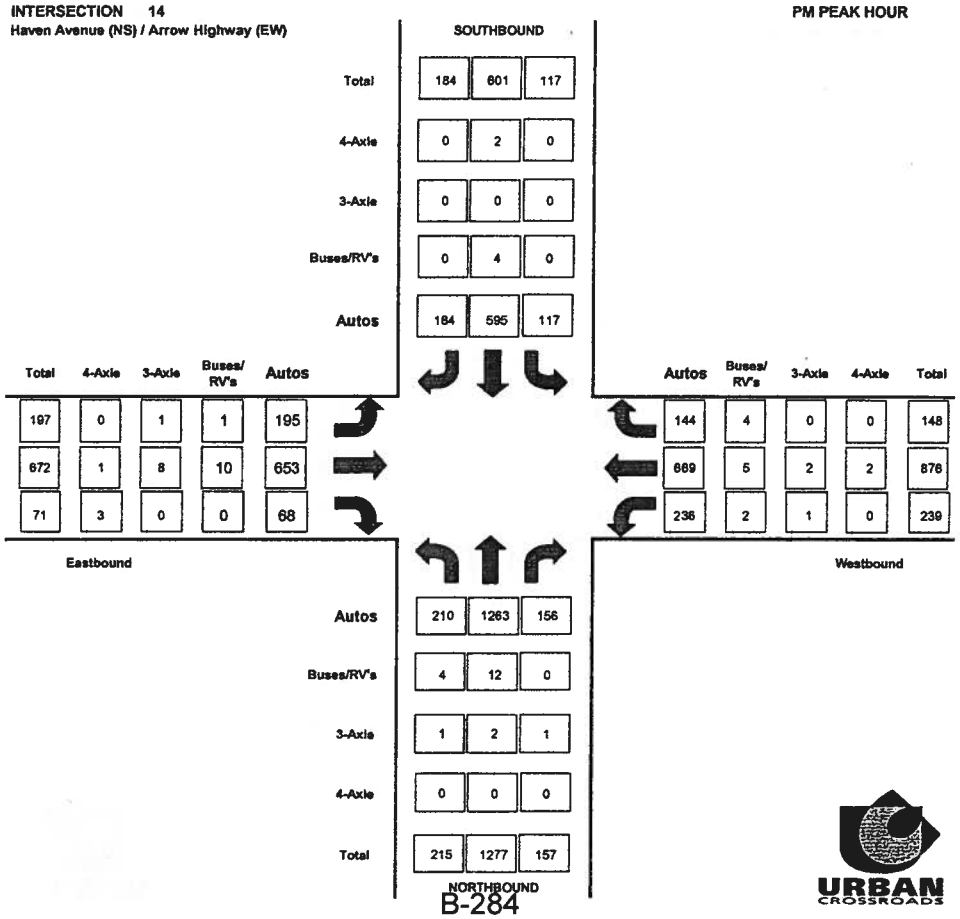

Counts Unlimited Inc.
25286 Jaclyn Avenue
Moreno Valley, CA 92557
951-485-7934

City of Rancho Cucamonga
N/S: Haven Avenue
E/W: Arrow Highway
Weather: Sunny

File Name : RNCHAARAM
Site Code : 9150092
Start Date : 6/2/2009
Page No : 1

Groups Printed- Passenger Vehicles - Large 2 Axle Vehicles - 3 Axle Vehicles - 4+ Axle Trucks

	Haven Avenue Southbound					Arrow Highway Westbound					Haven Avenue Northbound					Arrow Highway Eastbound					
Start Time	Left	Thru	Right	RoR	App. Total	Left	Thru	Right	RoR	App. Total	Left	Thru	Right	RoR	App. Total	Left	Thru	Right	RoR	App. Total	Int. Total
07:00 AM	19	152	10	15	196	19	73	7	3	102	13	94	11	11	129	28	71	11	17	127	554
07:15 AM	17	198	17	14	246	16	80	8	1	105	12	124	15	12	163	21	102	16	6	145	659
07:30 AM	24	211	17	14	266	22	115	6	4	147	19	143	19	11	192	31	108	20	15	174	779
07:45 AM	49	219	25	23	316	31	108	10	6	155	12	174	17	16	219	40	155	10	16	221	911
Total	109	780	69	66	1024	88	376	31	14	509	56	535	62	50	703	120	436	57	54	667	2903
08:00 AM	57	165	22	18	262	30	107	11	8	156	12	208	29	7	256	48	124	6	18	196	870
08:15 AM	44	199	9	14	266	32	91	9	2	134	12	250	34	6	302	55	132	14	10	211	913
08:30 AM	39	172	14	20	245	39	84	16	2	141	16	183	37	9	245	30	88	7	13	138	769
08:45 AM	47	187	13	17	264	28	114	18	3	163	17	169	28	8	222	29	137	4	13	183	832
Total	187	723	58	69	1037	129	396	54	15	594	57	810	128	30	1025	162	481	31	54	728	3384
Grand Total	296	1503	127	135	2061	217	772	85	29	1103	113	1345	190	80	1728	282	917	88	108	1395	6287
Apprch %	14.4	72.9	6.2	6.6		19.7	70	7.7	2.6		6.5	77.8	11	4.6		20.2	65.7	6.3	7.7		
Total %	4.7	23.9	2	2.1	32.8	3.5	12.3	1.4	0.5	17.5	1.8	21.4	3	1.3	27.5	4.5	14.6	1.4	1.7	22.2	
Passenger Vehicles		1472										1302									
% Passenger Vehicles	96.3	97.9	91.3	95.6	97.1	94	94.9	90.6	100	94.6	90.3	96.8	93.7	92.5	95.8	96.5	94.4	97.7	97.2	95.3	95.9
Large 2 Axle Vehicles																					
% Large 2 Axle Vehicles	2.7	1.3	6.3	3	1.9	3.2	4.5	9.4	0	4.5	7.1	2.5	3.7	3.8	3	3.2	3.9	1.1	2.8	3.5	3
3 Axle Vehicles	2	2	1	1	6	3	2	0	0	5	3	8	3	3	17	1	9	0	0	10	38
% 3 Axle Vehicles	0.7	0.1	0.8	0.7	0.3	1.4	0.3	0	0	0.5	2.7	0.6	1.6	3.8	1	0.4	1	0	0	0.7	0.6
4+ Axle Trucks	1	10	2	1	14	3	2	0	0	5	0	1	2	0	3	0	6	1	0	7	29
% 4+ Axle Trucks																					

	Haven Avenue Southbound					Arrow Highway Westbound					Haven Avenue Northbound					Arrow Highway Eastbound					
Start Time	Left	Thru	Right	RoR	App. Total	Left	Thru	Right	RoR	App. Total	Left	Thru	Right	RoR	App. Total	Left	Thru	Right	RoR	App. Total	Int. Total
Peak Hour Analysis From 07:00 AM to 08:45 AM - Peak 1 of 1																					
Peak Hour for Entire Intersection Begins at 07:30 AM																					
07:30 AM	24	211	17	14	266	22	**115**	6	4	147	**19**	143	19	11	192	31	108	**20**	15	174	779
07:45 AM	49	**219**	**25**	**23**	**316**	31	108	10	6	155	12	174	17	**16**	219	40	**155**	10	16	**221**	911
08:00 AM	**57**	165	22	18	262	30	107	**11**	**8**	**156**	12	208	29	7	256	48	124	6	**18**	196	870
08:15 AM	44	199	9	14	266	**32**	91	9	2	134	12	**250**	**34**	6	**302**	**55**	132	14	10	211	**913**
Total Volume	174	794	73	69	1110	115	421	36	20	592	55	775	99	40	969	174	519	50	59	802	3473
% App. Total	15.7	71.5	6.6	6.2		19.4	71.1	6.1	3.4		5.7	80	10.2	4.1		21.7	64.7	6.2	7.4		
PHF	.763	.906	.730	.750	.878	.898	.915	.818	.625	.949	.724	.775	.728	.625	.802	.791	.837	.625	.819	.907	.951

Counts Unlimited Inc.
25286 Jaclyn Avenue
Moreno Valley, CA 92557
951-485-7934

City of Rancho Cucamonga
N/S: Haven Avenue
E/W: Arrow Highway
Weather: Sunny

File Name : RNCHAARAM
Site Code : 9150092
Start Date : 6/2/2009
Page No : 2

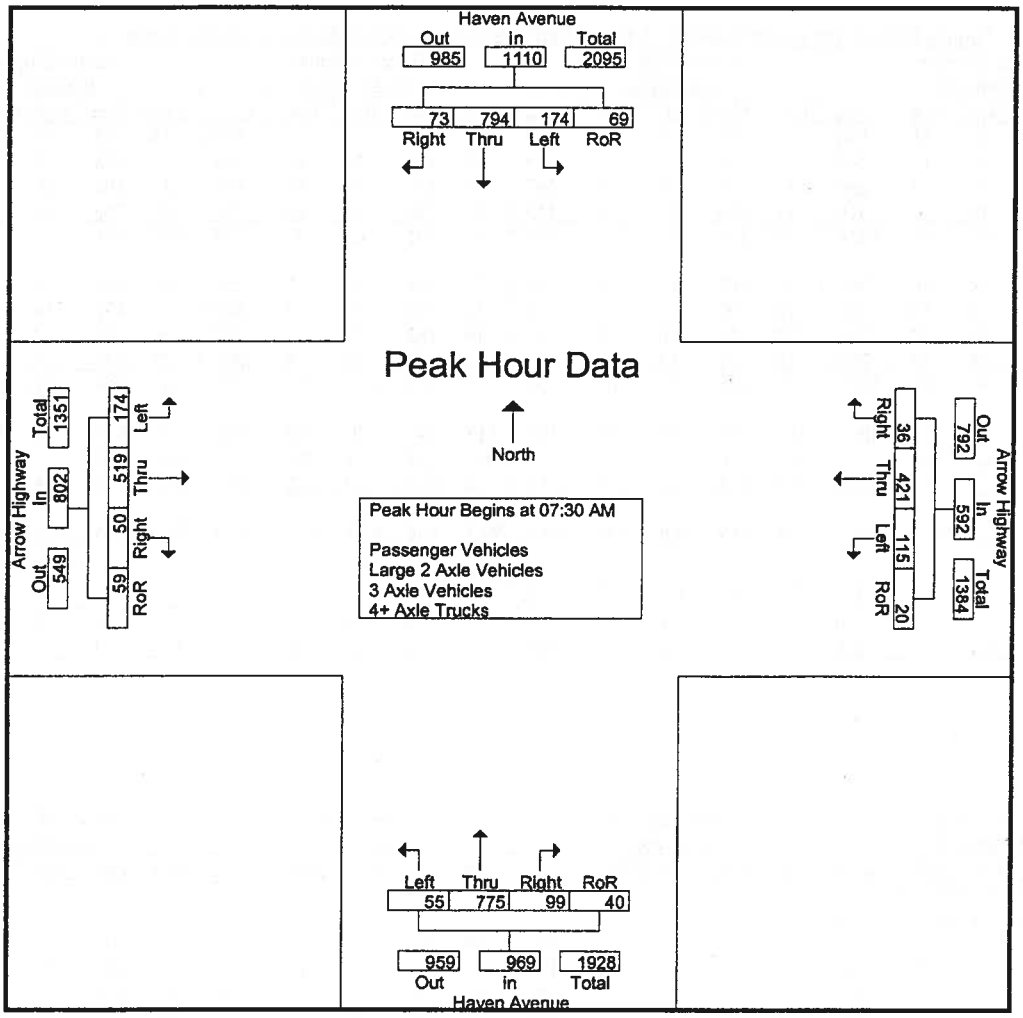

Peak Hour Analysis From 07:00 AM to 08:45 AM - Peak 1 of 1

Peak Hour for Each Approach Begins at:

	07:30 AM					08:00 AM					08:00 AM					07:30 AM				
+0 mins.	24	211	17	14	266	30	107	11	**8**	156	12	208	29	7	256	31	108	**20**	15	174
+15 mins.	49	**219**	**25**	**23**	**316**	32	91	9	2	134	12	**250**	34	6	**302**	40	**155**	10	16	**221**
+30 mins.	**57**	165	22	18	262	**39**	84	16	2	141	16	183	**37**	**9**	245	48	124	6	**18**	196
+45 mins.	44	199	9	14	266	28	**114**	**18**	3	**163**	**17**	169	28	8	222	**55**	132	14	10	211
Total Volume	174	794	73	69	1110	129	396	54	15	594	57	810	128	30	1025	174	519	50	59	802
% App. Total	15.7	71.5	6.6	6.2		21.7	66.7	9.1	2.5		5.6	79	12.5	2.9		21.7	64.7	6.2	7.4	
PHF	.763	.906	.730	.750	.878	.827	.868	.750	.469	.911	.838	.810	.865	.833	.849	.791	.837	.625	.819	.907

Counts Unlimited Inc.
25286 Jaclyn Avenue
Moreno Valley, CA 92557
951-485-7934

City of Rancho Cucamonga
N/S: Haven Avenue
E/W: Arrow Highway
Weather: Sunny

File Name : RNCHAARAM
Site Code : 9150092
Start Date : 6/2/2009
Page No : 1

Groups Printed- Passenger Vehicles

	Haven Avenue Southbound					Arrow Highway Westbound					Haven Avenue Northbound					Arrow Highway Eastbound					
Start Time	Left	Thru	Right	RoR	App. Total	Left	Thru	Right	RoR	App. Total	Left	Thru	Right	RoR	App. Total	Left	Thru	Right	RoR	App. Total	Int. Total
07:00 AM	19	147	8	14	188	15	64	7	3	89	13	87	11	9	120	26	66	11	16	119	516
07:15 AM	17	193	17	13	240	15	77	7	1	100	12	119	12	12	155	19	98	16	6	139	634
07:30 AM	23	208	16	13	260	22	114	5	4	145	16	139	19	10	184	31	102	20	15	168	757
07:45 AM	47	214	24	23	308	30	103	9	6	148	11	168	16	15	210	39	148	9	15	211	877
Total	106	762	65	63	996	82	358	28	14	482	52	513	58	46	669	115	414	56	52	637	2784
08:00 AM	53	163	18	17	251	27	101	10	8	146	10	205	27	6	248	48	119	5	18	190	835
08:15 AM	43	195	8	14	260	30	84	7	2	123	12	245	32	6	295	53	122	14	10	199	877
08:30 AM	38	167	13	19	237	38	84	16	2	140	13	177	37	8	235	28	84	7	12	131	743
08:45 AM	45	185	12	16	258	27	106	16	3	152	15	162	24	8	209	28	127	4	13	172	791
Total	179	710	51	66	1006	122	375	49	15	561	50	789	120	28	987	157	452	30	53	692	3246
Grand Total	285	1472	116	129	2002	204	733	77	29	1043	102	1302	178	74	1656	272	866	86	105	1329	6030
Apprch %	14.2	73.5	5.8	6.4		19.6	70.3	7.4	2.8		6.2	78.6	10.7	4.5		20.5	65.2	6.5	7.9		
Total %	4.7	24.4	1.9	2.1	33.2	3.4	12.2	1.3	0.5	17.3	1.7	21.6	3	1.2	27.5	4.5	14.4	1.4	1.7	22	

	Haven Avenue Southbound					Arrow Highway Westbound					Haven Avenue Northbound					Arrow Highway Eastbound					
Start Time	Left	Thru	Right	RoR	App. Total		Thru	Right	RoR	App. Total		Thru	Right	RoR	App. Total		Thru	Right	RoR	App. Total	Int. Total
Peak Hour Analysis From 07:30 AM to 08:15 AM - Peak 1 of 1																					
Peak Hour for Entire Intersection Begins at 07:30 AM																					
07:30 AM	23	208	16	13	260	22	**114**	5	4	145	**16**	139	19	10	184	31	102	**20**	15	168	757
07:45 AM	47	**214**	**24**	**23**	**308**	**30**	103	9	6	**148**	11	168	16	**15**	210	39	**148**	9	15	**211**	877
08:00 AM	**53**	163	18	17	251	27	101	**10**	**8**	146	10	205	27	6	248	48	119	5	**18**	190	835
08:15 AM	43	195	8	14	260	30	84	7	2	123	12	**245**	**32**	6	**295**	**53**	122	14	10	199	877
Total Volume	166	780	66	67	1079	109	402	31	20	562	49	757	94	37	937	171	491	48	58	768	3346
% App. Total	15.4	72.3	6.1	6.2		19.4	71.5	5.5	3.6		5.2	80.8	10	3.9		22.3	63.9	6.2	7.6		
PHF	.783	.911	.688	.728	.876	.908	.882	.775	.625	.949	.766	.772	.734	.617	.794	.807	.829	.600	.806	.910	.954

Counts Unlimited Inc.
25286 Jaclyn Avenue
Moreno Valley, CA 92557
951-485-7934

City of Rancho Cucamonga
N/S: Haven Avenue
E/W: Arrow Highway
Weather: Sunny

File Name : RNCHAARAM
Site Code : 9150092
Start Date : 6/2/2009
Page No : 2

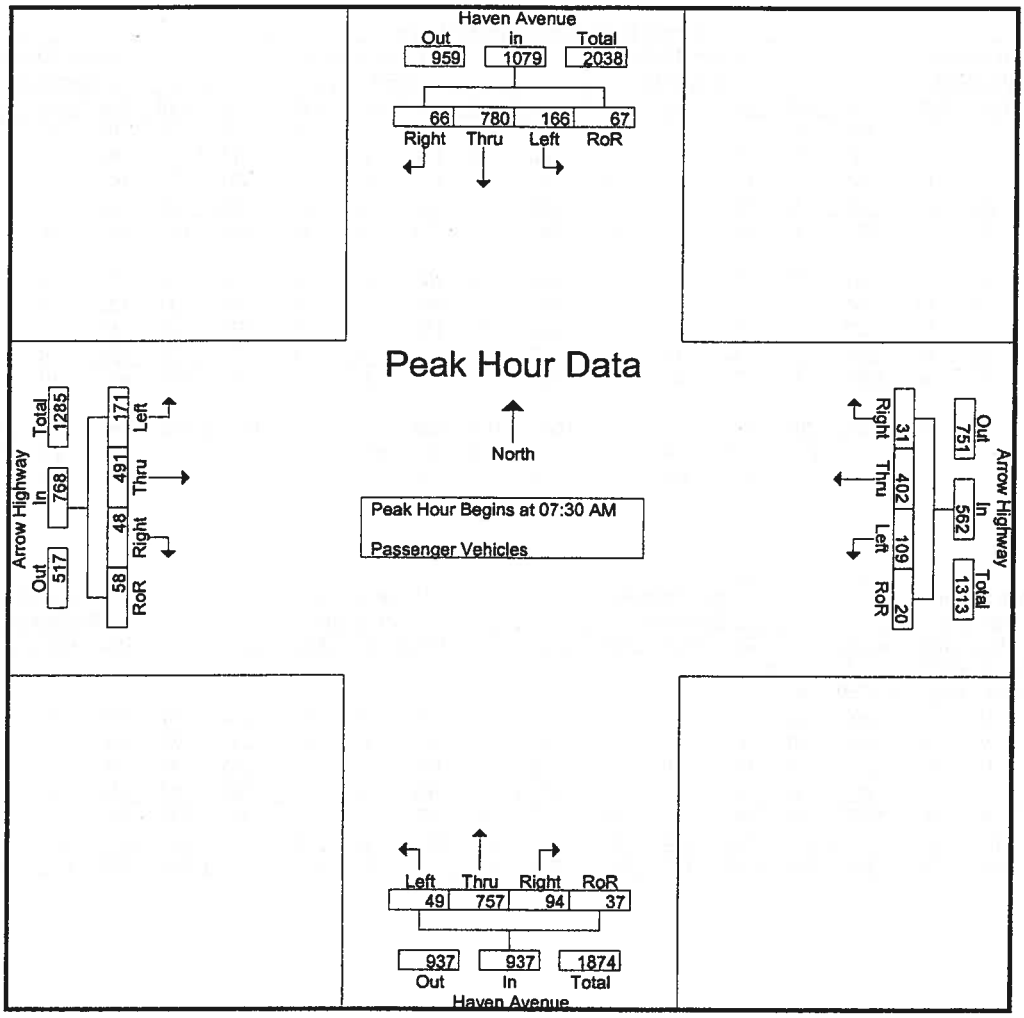

Peak Hour Analysis From 07:30 AM to 08:15 AM - Peak 1 of 1

Peak Hour for Each Approach Begins at:

	07:30 AM					07:30 AM					07:30 AM					07:30 AM				
+0 mins.	23	208	16	13	260	22	**114**	5	4	145	**16**	139	19	10	184	31	102	**20**	15	168
+15 mins.	47	**214**	**24**	**23**	**308**	**30**	103	9	6	**148**	11	168	16	**15**	210	39	**148**	9	15	**211**
+30 mins.	**53**	163	18	17	251	27	101	**10**	**8**	146	10	205	27	6	248	48	119	5	**18**	190
+45 mins.	43	195	8	14	260	30	84	7	2	123	12	**245**	**32**	6	**295**	**53**	122	14	10	199
Total Volume	166	780	66	67	1079	109	402	31	20	562	49	757	94	37	937	171	491	48	58	768
% App. Total	15.4	72.3	6.1	6.2		19.4	71.5	5.5	3.6		5.2	80.8	10	3.9		22.3	63.9	6.2	7.6	
PHF	.783	.911	.688	.728	.876	.908	.882	.775	.625	.949	.766	.772	.734	.617	.794	.807	.829	.600	.806	.910

Counts Unlimited Inc.
25286 Jaclyn Avenue
Moreno Valley, CA 92557
951-485-7934

City of Rancho Cucamonga
N/S: Haven Avenue
E/W: Arrow Highway
Weather: Sunny

File Name : RNCHAARAM
Site Code : 9150092
Start Date : 6/2/2009
Page No : 1

Groups Printed- Large 2 Axle Vehicles

	Haven Avenue Southbound					Arrow Highway Westbound					Haven Avenue Northbound					Arrow Highway Eastbound					
Start Time	Left	Thru	Right	RoR	App. Total	Left	Thru	Right	RoR	App. Total	Left	Thru	Right	RoR	App. Total	Left	Thru	Right	RoR	App. Total	Int. Total
07:00 AM	0	1	2	1	4	2	8	0	0	10	0	5	0	0	5	2	4	0	1	7	26
07:15 AM	0	4	0	1	5	0	2	1	0	3	0	4	2	0	6	2	3	0	0	5	19
07:30 AM	1	2	1	1	5	0	1	1	0	2	3	3	0	0	6	0	4	0	0	4	17
07:45 AM	2	4	0	0	6	0	4	1	0	5	0	6	0	1	7	1	4	0	1	6	24
Total	3	11	3	3	20	2	15	3	0	20	3	18	2	1	24	5	15	0	2	22	86
08:00 AM	2	1	3	1	7	2	6	1	0	9	1	2	0	1	4	0	4	1	0	5	25
08:15 AM	1	2	1	0	4	2	6	2	0	10	0	4	1	0	5	2	7	0	0	9	28
08:30 AM	1	4	1	0	6	1	0	0	0	1	2	6	0	1	9	2	3	0	1	6	22
08:45 AM	1	1	0	0	2	0	8	2	0	10	2	4	4	0	10	0	7	0	0	7	29
Total	5	8	5	1	19	5	20	5	0	30	5	16	5	2	28	4	21	1	1	27	104
Grand Total	8	19	8	4	39	7	35	8	0	50	8	34	7	3	52	9	36	1	3	49	190
Apprch %	20.5	48.7	20.5	10.3		14	70	16	0		15.4	65.4	13.5	5.8		18.4	73.5	2	6.1		
Total %	4.2	10	4.2	2.1	20.5	3.7	18.4	4.2	0	26.3	4.2	17.9	3.7	1.6	27.4	4.7	18.9	0.5	1.6	25.8	

	Haven Avenue Southbound					Arrow Highway Westbound					Haven Avenue Northbound					Arrow Highway Eastbound					
Start Time	Left	Thru	Right	RoR	App. Total		Thru	Right	RoR	App. Total		Thru	Right	RoR	App. Total		Thru	Right	RoR	App. Total	Int. Total
Peak Hour Analysis From 07:30 AM to 08:15 AM - Peak 1 of 1																					
Peak Hour for Entire Intersection Begins at 07:30 AM																					
07:30 AM	1	2	1	1	5	0	1	1	0	2	3	3	0	0	6	0	4	0	0	4	17
07:45 AM	2	4	0	0	6	0	4	1	0	5	0	6	0	1	7	1	4	0	1	6	24
08:00 AM	2	1	3	1	7	2	6	1	0	9	1	2	0	1	4	0	4	1	0	5	25
08:15 AM	1	2	1	0	4	2	6	2	0	10	0	4	1	0	5	2	7	0	0	9	28
Total Volume	6	9	5	2	22	4	17	5	0	26	4	15	1	2	22	3	19	1	1	24	94
% App. Total	27.3	40.9	22.7	9.1		15.4	65.4	19.2	0		18.2	68.2	4.5	9.1		12.5	79.2	4.2	4.2		
PHF	.750	.563	.417	.500	.786	.500	.708	.625	.000	.650	.333	.625	.250	.500	.786	.375	.679	.250	.250	.667	.839

Counts Unlimited Inc.
25286 Jaclyn Avenue
Moreno Valley, CA 92557
951-485-7934

City of Rancho Cucamonga
N/S: Haven Avenue
E/W: Arrow Highway
Weather: Sunny

File Name : RNCHAARAM
Site Code : 9150092
Start Date : 6/2/2009
Page No : 2

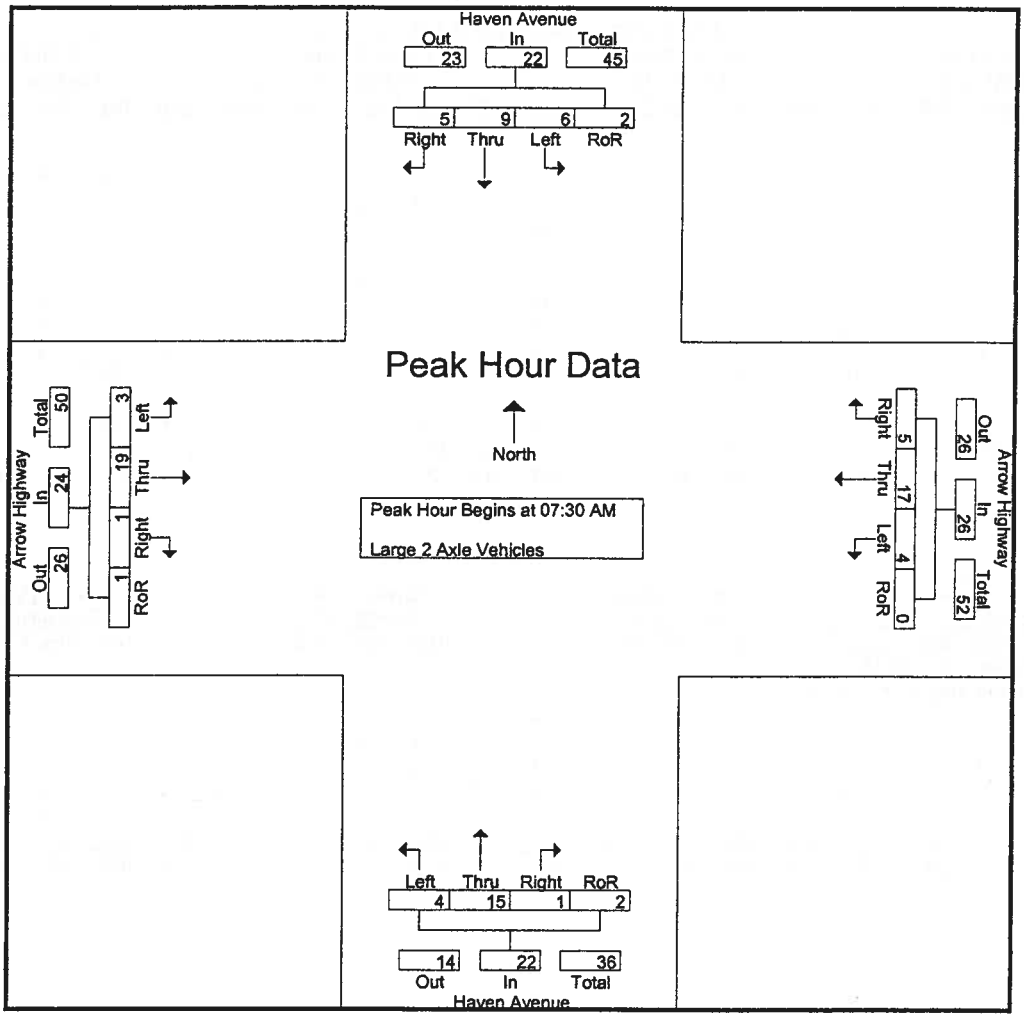

Peak Hour Analysis From 07:30 AM to 08:15 AM - Peak 1 of 1

Peak Hour for Each Approach Begins at:

	07:30 AM					07:30 AM					07:30 AM					07:30 AM				
+0 mins.	1	2	1	1	5	0	1	1	0	2	3	3	0	0	6	0	4	0	0	4
+15 mins.	2	4	0	0	6	0	4	1	0	5	0	6	0	1	7	1	4	0	1	6
+30 mins.	2	1	3	1	7	2	6	1	0	9	1	2	0	1	4	0	4	1	0	5
+45 mins.	1	2	1	0	4	2	6	2	0	10	0	4	1	0	5	2	7	0	0	9
Total Volume	6	9	5	2	22	4	17	5	0	26	4	15	1	2	22	3	19	1	1	24
% App. Total	27.3	40.9	22.7	9.1		15.4	65.4	19.2	0		18.2	68.2	4.5	9.1		12.5	79.2	4.2	4.2	
PHF	.750	.563	.417	.500	.786	.500	.708	.625	.000	.650	.333	.625	.250	.500	.786	.375	.679	.250	.250	.667

Counts Unlimited Inc.
25286 Jaclyn Avenue
Moreno Valley, CA 92557
951-485-7934

City of Rancho Cucamonga
N/S: Haven Avenue
E/W: Arrow Highway
Weather: Sunny

File Name : RNCHAARAM
Site Code : 9150092
Start Date : 6/2/2009
Page No : 1

Groups Printed- 3 Axle Vehicles

	Haven Avenue Southbound					Arrow Highway Westbound					Haven Avenue Northbound					Arrow Highway Eastbound					
Start Time	Left	Thru	Right	RoR	App. Total	Left	Thru	Right	RoR	App. Total	Left	Thru	Right	RoR	App. Total	Left	Thru	Right	RoR	App. Total	Int. Total
07:00 AM	0	1	0	0	1	0	0	0	0	0	0	2	0	2	4	0	0	0	0	0	5
07:15 AM	0	0	0	0	0	1	0	0	0	1	0	1	1	0	2	0	0	0	0	0	3
07:30 AM	0	0	0	0	0	0	0	0	0	0	0	1	0	1	2	0	2	0	0	2	4
07:45 AM	0	0	0	0	0	1	1	0	0	2	1	0	1	0	2	0	1	0	0	1	5
Total	0	1	0	0	1	2	1	0	0	3	1	4	2	3	10	0	3	0	0	3	17
08:00 AM	2	1	1	0	4	1	0	0	0	1	1	1	1	0	3	0	1	0	0	1	9
08:15 AM	0	0	0	0	0	0	1	0	0	1	0	1	0	0	1	0	3	0	0	3	5
08:30 AM	0	0	0	1	1	0	0	0	0	0	1	0	0	0	1	0	0	0	0	0	2
08:45 AM	0	0	0	0	0	0	0	0	0	0	0	2	0	0	2	1	2	0	0	3	5
Total	2	1	1	1	5	1	1	0	0	2	2	4	1	0	7	1	6	0	0	7	21
Grand Total	2	2	1	1	6	3	2	0	0	5	3	8	3	3	17	1	9	0	0	10	38
Apprch %	33.3	33.3	16.7	16.7		60	40	0	0		17.6	47.1	17.6	17.6		10	90	0	0		
Total %	5.3	5.3	2.6	2.6	15.8	7.9	5.3	0	0	13.2	7.9	21.1	7.9	7.9	44.7	2.6	23.7	0	0	26.3	

	Haven Avenue Southbound					Arrow Highway Westbound					Haven Avenue Northbound					Arrow Highway Eastbound					
Start Time	Left	Thru	Right	RoR	App. Total		Thru	Right	RoR	App. Total		Thru	Right	RoR	App. Total		Thru	Right	RoR	App. Total	Int. Total
Peak Hour Analysis From 07:30 AM to 08:15 AM - Peak 1 of 1																					
Peak Hour for Entire Intersection Begins at 07:30 AM																					
07:30 AM	0	0	0	0	0	0	0	0	0	0	0	1	0	1	2	0	2	0	0	2	4
07:45 AM	0	0	0	0	0	1	1	0	0	2	1	0	1	0	2	0	1	0	0	1	5
08:00 AM	2	1	1	0	4	1	0	0	0	1	1	1	1	0	3	0	1	0	0	1	9
08:15 AM	0	0	0	0	0	0	1	0	0	1	0	1	0	0	1	0	3	0	0	3	5
Total Volume	2	1	1	0	4	2	2	0	0	4	2	3	2	1	8	0	7	0	0	7	23
% App. Total	50	25	25	0		50	50	0	0		25	37.5	25	12.5		0	100	0	0		
PHF	.250	.250	.250	.000	.250	.500	.500	.000	.000	.500	.500	.750	.500	.250	.667	.000	.583	.000	.000	.583	.639

Counts Unlimited Inc.
25286 Jaclyn Avenue
Moreno Valley, CA 92557
951-485-7934

City of Rancho Cucamonga
N/S: Haven Avenue
E/W: Arrow Highway
Weather: Sunny

File Name : RNCHAARAM
Site Code : 9150092
Start Date : 6/2/2009
Page No : 2

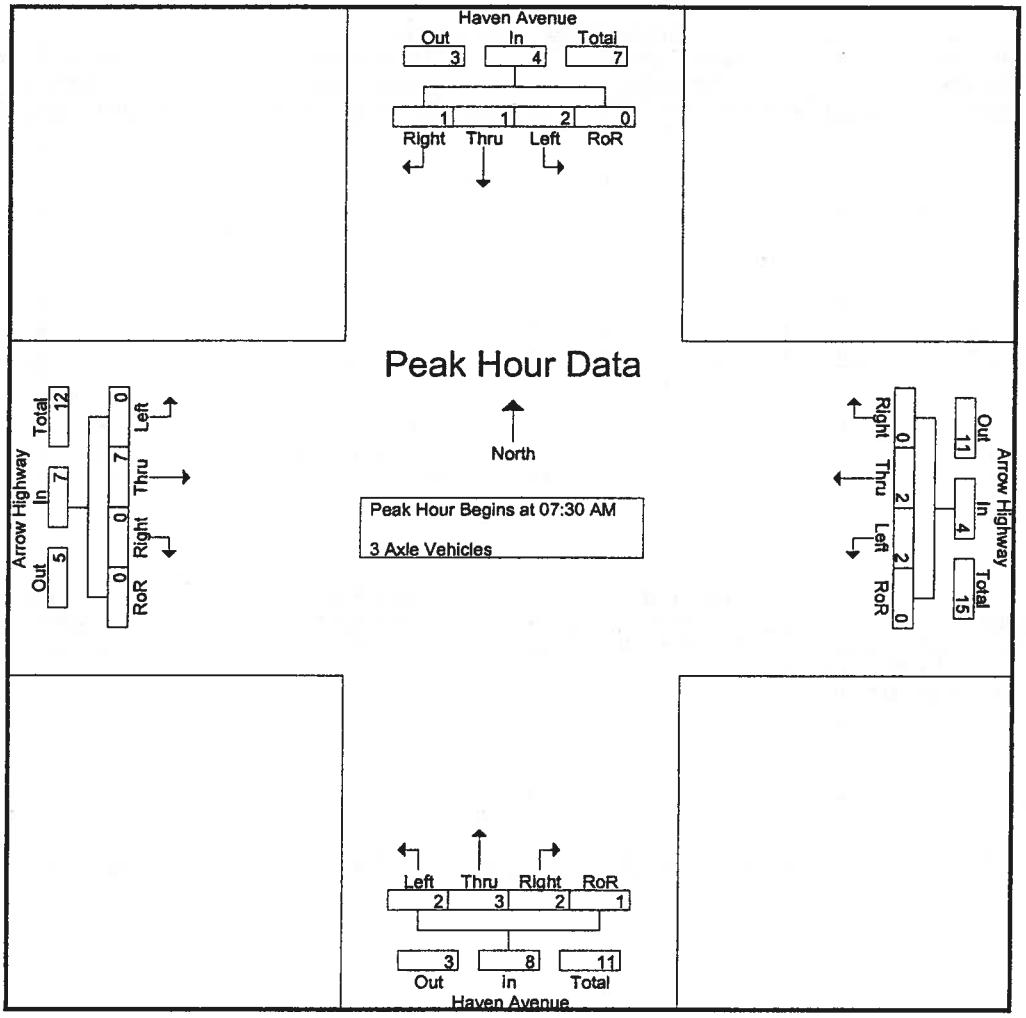

Peak Hour Analysis From 07:30 AM to 08:15 AM - Peak 1 of 1

Peak Hour for Each Approach Begins at:

	07:30 AM					07:30 AM					07:30 AM					07:30 AM				
+0 mins.	0	0	0	0	0	0	0	0	0	0	0	1	0	1	2	0	2	0	0	2
+15 mins.	0	0	0	0	0	1	1	0	0	2	1	0	1	0	2	0	1	0	0	1
+30 mins.	2	1	1	0	4	1	0	0	0	1	1	1	1	0	3	0	1	0	0	1
+45 mins.	0	0	0	0	0	0	1	0	0	1	0	1	0	0	1	0	3	0	0	3
Total Volume	2	1	1	0	4	2	2	0	0	4	2	3	2	1	8	0	7	0	0	7
% App. Total	50	25	25	0		50	50	0	0		25	37.5	25	12.5		0	100	0	0	
PHF	.250	.250	.250	.000	.250	.500	.500	.000	.000	.500	.500	.750	.500	.250	.667	.000	.583	.000	.000	.583

Counts Unlimited Inc.
25286 Jaclyn Avenue
Moreno Valley, CA 92557
951-485-7934

City of Rancho Cucamonga
N/S: Haven Avenue
E/W: Arrow Highway
Weather: Sunny

File Name : RNCHAARAM
Site Code : 9150092
Start Date : 6/2/2009
Page No : 1

Groups Printed- 4+ Axle Trucks

	Haven Avenue Southbound					Arrow Highway Westbound					Haven Avenue Northbound					Arrow Highway Eastbound					
Start Time	Left	Thru	Right	RoR	App. Total	Left	Thru	Right	RoR	App. Total	Left	Thru	Right	RoR	App. Total	Left	Thru	Right	RoR	App. Total	Int. Total
07:00 AM	0	3	0	0	3	2	1	0	0	3	0	0	0	0	0	0	1	0	0	1	7
07:15 AM	0	1	0	0	1	0	1	0	0	1	0	0	0	0	0	0	1	0	0	1	3
07:30 AM	0	1	0	0	1	0	0	0	0	0	0	0	0	0	0	0	0	0	0	0	1
07:45 AM	0	1	1	0	2	0	0	0	0	0	0	0	0	0	0	0	2	1	0	3	5
Total	0	6	1	0	7	2	2	0	0	4	0	0	0	0	0	0	4	1	0	5	16
08:00 AM	0	0	0	0	0	0	0	0	0	0	0	0	1	0	1	0	0	0	0	0	1
08:15 AM	0	2	0	0	2	0	0	0	0	0	0	0	1	0	1	0	0	0	0	0	3
08:30 AM	0	1	0	0	1	0	0	0	0	0	0	0	0	0	0	0	1	0	0	1	2
08:45 AM	1	1	1	1	4	1	0	0	0	1	0	1	0	0	1	0	1	0	0	1	7
Total	1	4	1	1	7	1	0	0	0	1	0	1	2	0	3	0	2	0	0	2	13
Grand Total	1	10	2	1	14	3	2	0	0	5	0	1	2	0	3	0	6	1	0	7	29
Apprch %	7.1	71.4	14.3	7.1		60	40	0	0		0	33.3	66.7	0		0	85.7	14.3	0		
Total %	3.4	34.5	6.9	3.4	48.3	10.3	6.9	0	0	17.2	0	3.4	6.9	0	10.3	0	20.7	3.4	0	24.1	

	Haven Avenue Southbound					Arrow Highway Westbound					Haven Avenue Northbound					Arrow Highway Eastbound					
Start Time	Left	Thru	Right	RoR	App. Total		Thru	Right	RoR	App. Total		Thru	Right	RoR	App. Total		Thru	Right	RoR	App. Total	Int. Total
Peak Hour Analysis From 07:30 AM to 08:15 AM - Peak 1 of 1																					
Peak Hour for Entire Intersection Begins at 07:30 AM																					
07:30 AM	0	1	0	0	1	0	0	0	0	0	0	0	0	0	0	0	0	0	0	0	1
07:45 AM	0	1	1	0	2	0	0	0	0	0	0	0	0	0	0	0	2	1	0	3	5
08:00 AM	0	0	0	0	0	0	0	0	0	0	0	0	1	0	1	0	0	0	0	0	1
08:15 AM	0	2	0	0	2	0	0	0	0	0	0	0	1	0	1	0	0	0	0	0	3
Total Volume	0	4	1	0	5	0	0	0	0	0	0	0	2	0	2	0	2	1	0	3	10
% App. Total	0	80	20	0		0	0	0	0		0	0	100	0		0	66.7	33.3	0		
PHF	.000	.500	.250	.000	.625	.000	.000	.000	.000	.000	.000	.000	.500	.000	.500	.000	.250	.250	.000	.250	.500

Counts Unlimited Inc.
25286 Jaclyn Avenue
Moreno Valley, CA 92557
951-485-7934

City of Rancho Cucamonga
N/S: Haven Avenue
E/W: Arrow Highway
Weather: Sunny

File Name : RNCHAARAM
Site Code : 9150092
Start Date : 6/2/2009
Page No : 2

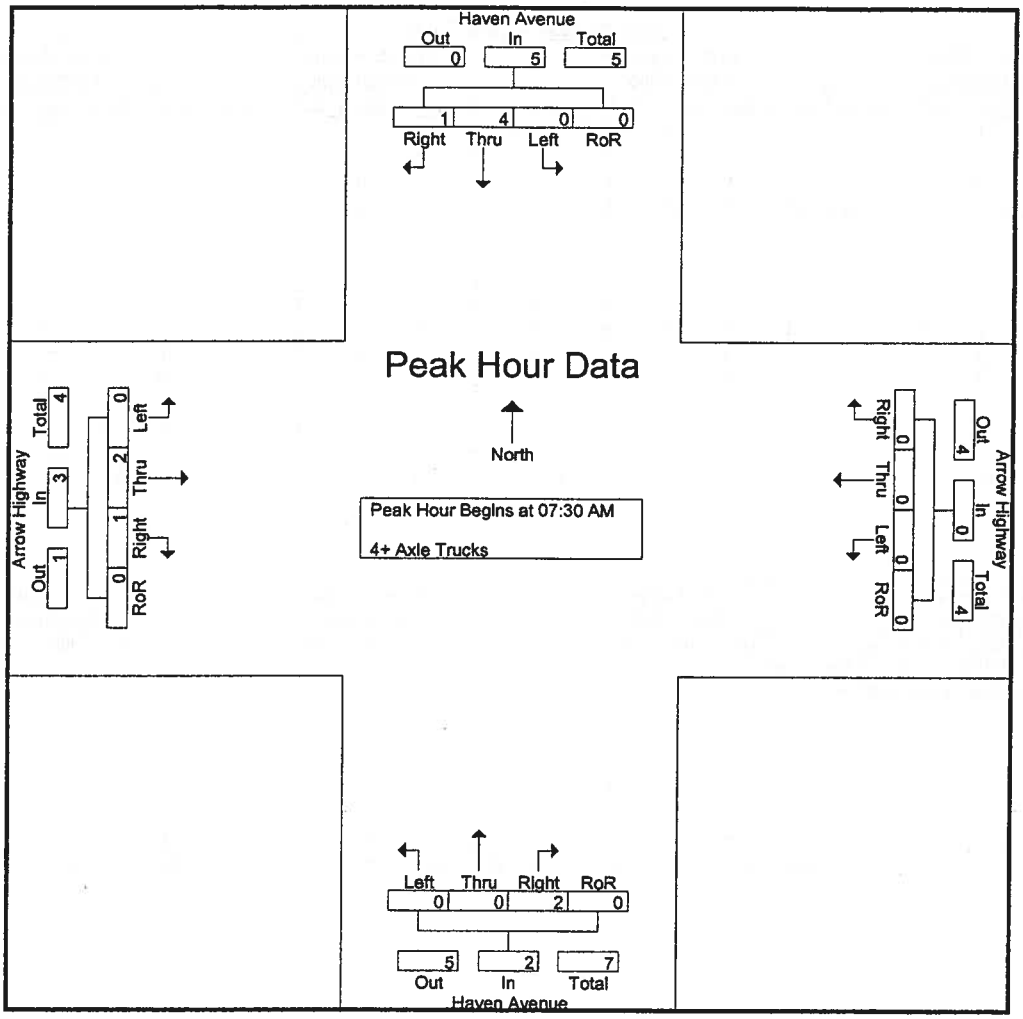

Peak Hour Analysis From 07:30 AM to 08:15 AM - Peak 1 of 1

Peak Hour for Each Approach Begins at:

	07:30 AM					07:30 AM					07:30 AM					07:30 AM				
+0 mins.	0	1	0	0	1	0	0	0	0	0	0	0	0	0	0	0	0	0	0	0
+15 mins.	0	1	1	0	2	0	0	0	0	0	0	0	0	0	0	0	2	1	0	3
+30 mins.	0	0	0	0	0	0	0	0	0	0	0	0	1	0	1	0	0	0	0	0
+45 mins.	0	2	0	0	2	0	0	0	0	0	0	0	1	0	1	0	0	0	0	0
Total Volume	0	4	1	0	5	0	0	0	0	0	0	0	2	0	2	0	2	1	0	3
% App. Total	0	80	20	0		0	0	0	0		0	0	100	0		0	66.7	33.3	0	
PHF	.000	.500	.250	.000	.625	.000	.000	.000	.000	.000	.000	.000	.500	.000	.500	.000	.250	.250	.000	.250

Counts Unlimited Inc.
25286 Jaclyn Avenue
Moreno Valley, CA 92557
951-485-7934

City of Rancho Cucamonga
N/S: Haven Avenue
E/W: Arrow Highway
Weather: Sunny

File Name : RNCHAARPM
Site Code : 9150092
Start Date : 6/2/2009
Page No : 1

Groups Printed- Passenger Vehicles - Large 2 Axle Vehicles - 3 Axle Vehicles - 4+ Axle Trucks

	Haven Avenue Southbound					Arrow Highway Westbound					Haven Avenue Northbound					Arrow Highway Eastbound					
Start Time	Left	Thru	Right	RoR	App. Total	Left	Thru	Right	RoR	App. Total	Left	Thru	Right	RoR	App. Total	Left	Thru	Right	RoR	App. Total	Int. Total
04:00 PM	31	163	28	24	246	55	132	33	9	229	32	247	20	14	313	37	179	5	6	227	1015
04:15 PM	26	179	25	20	250	63	121	31	1	216	31	274	18	14	337	48	132	1	7	188	991
04:30 PM	39	149	25	14	227	50	187	40	0	277	56	286	21	13	376	44	198	13	14	269	1149
04:45 PM	23	142	35	19	219	63	145	28	11	247	39	317	27	14	397	54	150	5	8	217	1080
Total	119	633	113	77	942	231	585	132	21	969	158	1124	86	55	1423	183	659	24	35	901	4235
05:00 PM	28	166	28	14	236	76	200	47	1	324	76	316	22	14	428	46	174	9	6	235	1223
05:15 PM	27	144	39	10	220	50	146	18	3	217	44	358	27	19	448	53	150	10	6	219	1104
05:30 PM	22	140	25	22	209	46	156	27	3	232	53	300	20	22	395	39	166	5	6	216	1052
05:45 PM	18	145	27	14	204	37	114	19	3	173	36	299	27	7	369	57	117	7	10	191	937
Total	95	595	119	60	869	209	616	111	10	946	209	1273	96	62	1640	195	607	31	28	861	4316
Grand Total	214	1228	232	137	1811	440	1201	243	31	1915	367	2397	182	117	3063	378	1266	55	63	1762	8551
Apprch %	11.8	67.8	12.8	7.6		23	62.7	12.7	1.6		12	78.3	5.9	3.8		21.5	71.9	3.1	3.6		
Total %	2.5	14.4	2.7	1.6	21.2	5.1	14	2.8	0.4	22.4	4.3	28	2.1	1.4	35.8	4.4	14.8	0.6	0.7	20.6	
Passenger Vehicles		1209					1179					2370					1222				
% Passenger Vehicles	99.5	98.5	100	100	98.9	97.7	98.2	97.5	100	98	98.1	98.9	99.5	99.1	98.8	99.2	96.5	92.7	98.4	97	98.3
Large 2 Axle Vehicles																					
% Large 2 Axle Vehicles	0.5	1.1	0	0	0.8	1.1	1.2	2.1	0	1.3	1.4	1	0	0	0.9	0.5	1.8	0	0	1.4	1.1
3 Axle Vehicles	0	2	0	0	2	4	3	1	0	8	1	4	1	1	7	1	17	0	0	18	35
% 3 Axle Vehicles	0	0.2	0	0	0.1	0.9	0.2	0.4	0	0.4	0.3	0.2	0.5	0.9	0.2	0.3	1.3	0	0	1	0.4
4+ Axle Trucks	0	3	0	0	3	1	4	0	0	5	1	0	0	0	1	0	4	4	1	9	18
% 4+ Axle Trucks																					

	Haven Avenue Southbound					Arrow Highway Westbound					Haven Avenue Northbound					Arrow Highway Eastbound					
Start Time	Left	Thru	Right	RoR	App. Total	Left	Thru	Right	RoR	App. Total	Left	Thru	Right	RoR	App. Total	Left	Thru	Right	RoR	App. Total	Int. Total
Peak Hour Analysis From 04:00 PM to 05:45 PM - Peak 1 of 1																					
Peak Hour for Entire Intersection Begins at 04:30 PM																					
04:30 PM	**39**	149	25	14	227	50	187	40	0	277	56	286	21	13	376	44	**198**	**13**	**14**	**269**	1149
04:45 PM	23	142	35	**19**	219	63	145	28	**11**	247	39	317	**27**	14	397	**54**	150	5	8	217	1080
05:00 PM	28	**166**	28	14	**236**	**76**	**200**	**47**	1	**324**	**76**	316	22	14	428	46	174	9	6	235	**1223**
05:15 PM	27	144	**39**	10	220	50	146	18	3	217	44	**358**	27	**19**	**448**	53	150	10	6	219	1104
Total Volume	117	601	127	57	902	239	678	133	15	1065	215	1277	97	60	1649	197	672	37	34	940	4556
% App. Total	13	66.6	14.1	6.3		22.4	63.7	12.5	1.4		13	77.4	5.9	3.6		21	71.5	3.9	3.6		
PHF	.750	.905	.814	.750	.956	.786	.848	.707	.341	.822	.707	.892	.898	.789	.920	.912	.848	.712	.607	.874	.931

Counts Unlimited Inc.
25286 Jaclyn Avenue
Moreno Valley, CA 92557
951-485-7934

City of Rancho Cucamonga
N/S: Haven Avenue
E/W: Arrow Highway
Weather: Sunny

File Name : RNCHAARPM
Site Code : 9150092
Start Date : 6/2/2009

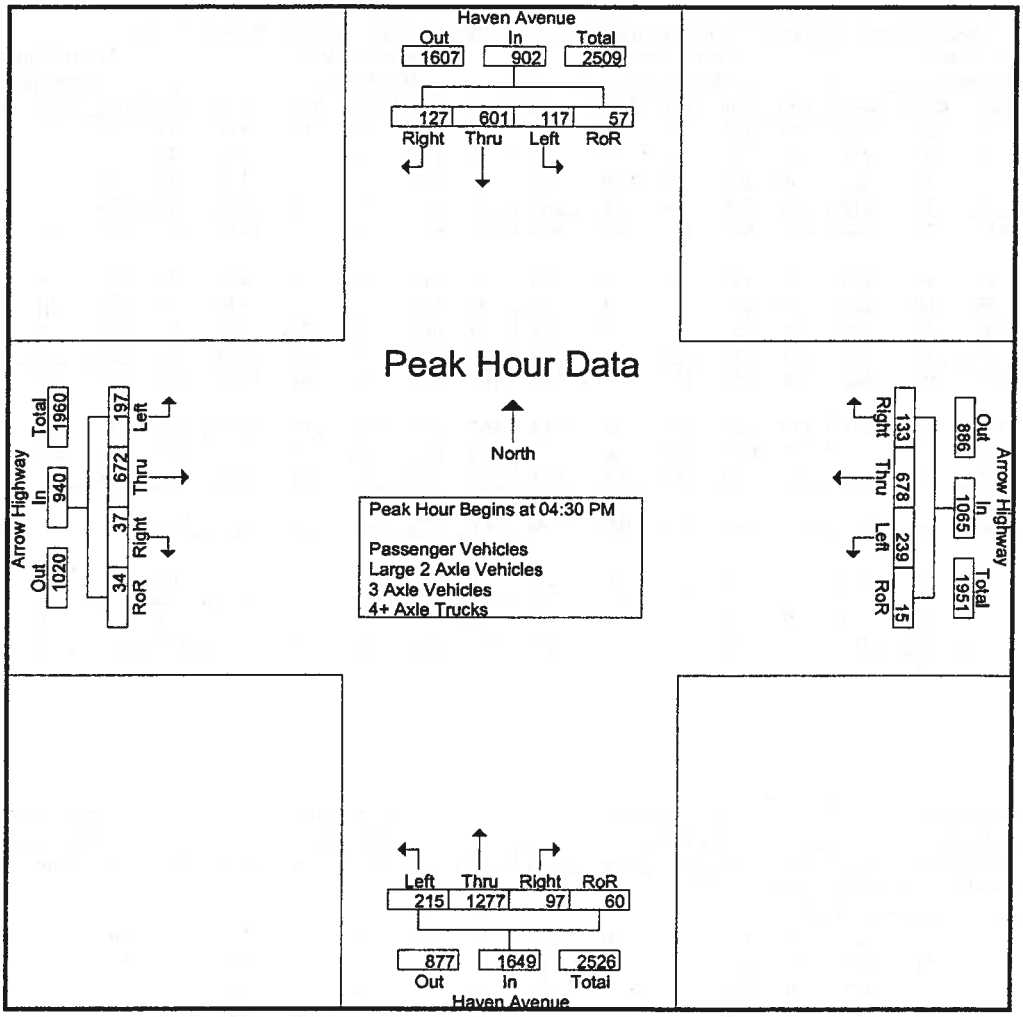

Peak Hour Analysis From 04:00 PM to 05:45 PM - Peak 1 of 1

Peak Hour for Each Approach Begins at:

	04:00 PM					04:30 PM					04:45 PM					04:30 PM				
+0 mins.	31	163	28	24	246	50	187	40	0	277	39	317	27	14	397	44	198	13	14	269
+15 mins.	26	179	25	20	250	63	145	28	11	247	76	316	22	14	428	54	150	5	8	217
+30 mins.	39	149	25	14	227	76	200	47	1	324	44	358	27	19	448	46	174	9	6	235
+45 mins.	23	142	35	19	219	50	146	18	3	217	53	300	20	22	395	53	150	10	6	219
Total Volume	119	633	113	77	942	239	678	133	15	1065	212	1291	96	69	1668	197	672	37	34	940
% App. Total	12.6	67.2	12	8.2		22.4	63.7	12.5	1.4		12.7	77.4	5.8	4.1		21	71.5	3.9	3.6	
PHF	.763	.884	.807	.802	.942	.786	.848	.707	.341	.822	.697	.902	.889	.784	.931	.912	.848	.712	.607	.874

Counts Unlimited Inc.
25286 Jaclyn Avenue
Moreno Valley, CA 92557
951-485-7934

City of Rancho Cucamonga
N/S: Haven Avenue
E/W: Arrow Highway
Weather: Sunny

File Name : RNCHAARPM
Site Code : 9150092
Start Date : 6/2/2009
Page No : 1

Groups Printed- Passenger Vehicles

	Haven Avenue Southbound					Arrow Highway Westbound					Haven Avenue Northbound					Arrow Highway Eastbound					
Start Time	Left	Thru	Right	RoR	App. Total	Left	Thru	Right	RoR	App. Total	Left	Thru	Right	RoR	App. Total	Left	Thru	Right	RoR	App. Total	Int. Total
04:00 PM	30	161	28	24	243	53	125	32	9	219	31	245	20	14	310	37	170	4	6	217	989
04:15 PM	26	174	25	20	245	61	119	31	1	212	30	268	18	14	330	47	123	1	7	178	965
04:30 PM	39	147	25	14	225	49	184	37	0	270	55	280	20	13	368	44	190	11	14	259	1122
04:45 PM	23	141	35	19	218	63	143	28	11	245	37	313	27	14	391	53	148	5	8	214	1068
Total	118	623	113	77	931	226	571	128	21	946	153	1106	85	55	1399	181	631	21	35	868	4144
05:00 PM	28	165	28	14	235	76	198	46	1	321	74	315	22	14	425	45	168	9	6	228	1209
05:15 PM	27	142	39	10	218	48	144	18	3	213	44	355	27	19	445	53	147	9	6	215	1091
05:30 PM	22	138	25	22	207	45	153	27	3	228	53	298	20	22	393	39	161	5	6	211	1039
05:45 PM	18	141	27	14	200	35	113	18	3	169	36	296	27	6	365	57	115	7	9	188	922
Total	95	586	119	60	860	204	608	109	10	931	207	1264	96	61	1628	194	591	30	27	842	4261
Grand Total	213	1209	232	137	1791	430	1179	237	31	1877	360	2370	181	116	3027	375	1222	51	62	1710	8405
Apprch %	11.9	67.5	13	7.6		22.9	62.8	12.6	1.7		11.9	78.3	6	3.8		21.9	71.5	3	3.6		
Total %	2.5	14.4	2.8	1.6	21.3	5.1	14	2.8	0.4	22.3	4.3	28.2	2.2	1.4	36	4.5	14.5	0.6	0.7	20.3	

	Haven Avenue Southbound					Arrow Highway Westbound					Haven Avenue Northbound					Arrow Highway Eastbound					
Start Time	Left	Thru	Right	RoR	App. Total		Thru	Right	RoR	App. Total		Thru	Right	RoR	App. Total		Thru	Right	RoR	App. Total	Int. Total
Peak Hour Analysis From 04:30 PM to 05:15 PM - Peak 1 of 1																					
Peak Hour for Entire Intersection Begins at 04:30 PM																					
04:30 PM	**39**	147	25	14	225	49	184	37	0	270	55	280	20	13	368	44	**190**	**11**	**14**	**259**	1122
04:45 PM	23	141	35	**19**	218	63	143	28	**11**	245	37	313	**27**	14	391	**53**	148	5	8	214	1068
05:00 PM	28	**165**	28	14	**235**	**76**	**198**	**46**	1	**321**	**74**	315	22	14	425	45	168	9	6	228	**1209**
05:15 PM	27	142	**39**	10	218	48	144	18	3	213	44	**355**	27	**19**	**445**	53	147	9	6	215	1091
Total Volume	117	595	127	57	896	236	669	129	15	1049	210	1263	96	60	1629	195	653	34	34	916	4490
% App. Total	13.1	66.4	14.2	6.4		22.5	63.8	12.3	1.4		12.9	77.5	5.9	3.7		21.3	71.3	3.7	3.7		
PHF	.750	.902	.814	.750	.953	.776	.845	.701	.341	.817	.709	.889	.889	.789	.915	.920	.859	.773	.607	.884	.928

Counts Unlimited Inc.
25286 Jaclyn Avenue
Moreno Valley, CA 92557
951-485-7934

City of Rancho Cucamonga
N/S: Haven Avenue
E/W: Arrow Highway
Weather: Sunny

File Name : RNCHAARPM
Site Code : 9150092
Start Date : 6/2/2009
Page No : 2

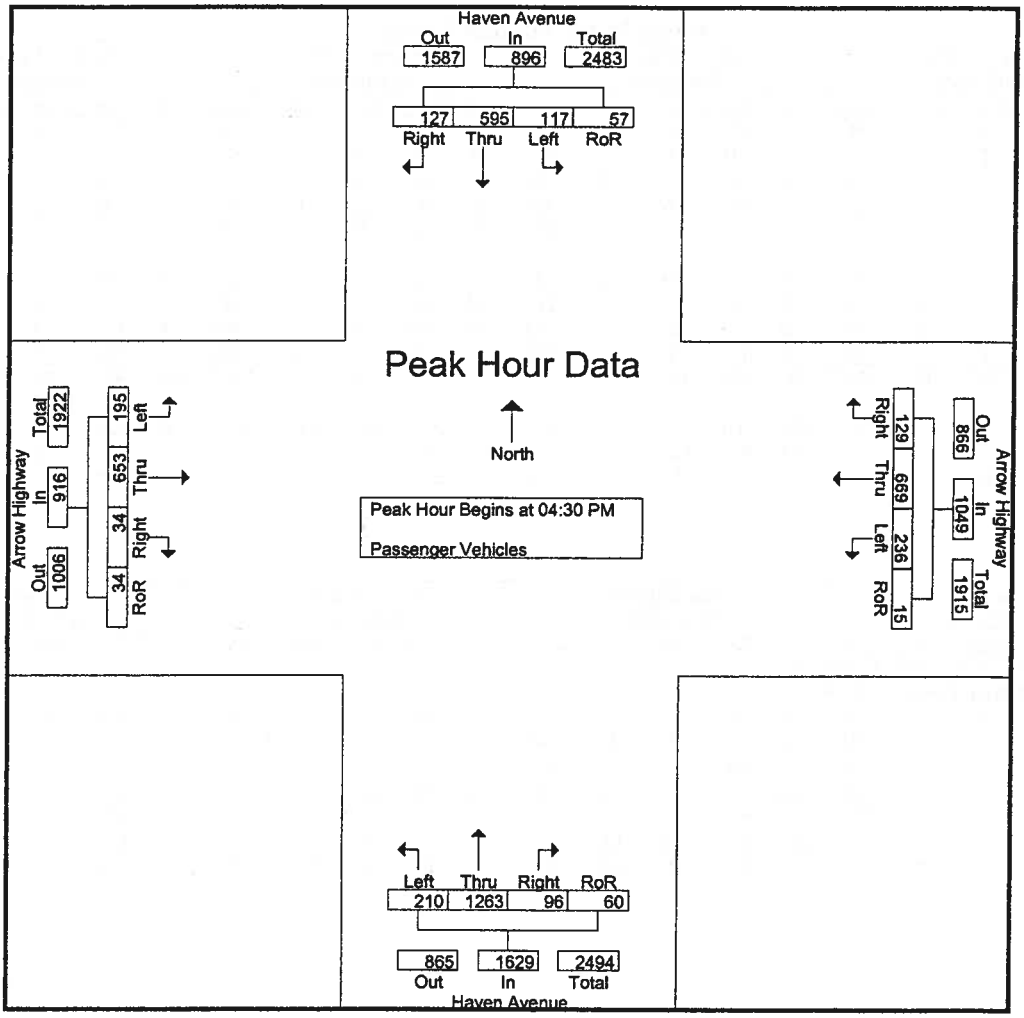

Peak Hour Analysis From 04:30 PM to 05:15 PM - Peak 1 of 1

Peak Hour for Each Approach Begins at:

	04:30 PM					04:30 PM					04:30 PM					04:30 PM				
+0 mins.	**39**	147	25	14	225	49	184	37	0	270	55	280	20	13	368	44	**190**	**11**	**14**	**259**
+15 mins.	23	141	35	**19**	218	63	143	28	**11**	245	37	313	**27**	14	391	**53**	148	5	8	214
+30 mins.	28	**165**	28	14	**235**	**76**	**198**	**46**	1	**321**	**74**	315	22	14	425	45	168	**9**	**6**	228
+45 mins.	27	142	**39**	10	218	48	144	18	3	213	44	**355**	27	**19**	**445**	53	147	**9**	**6**	215
Total Volume	117	595	127	57	896	236	669	129	15	1049	210	1263	96	60	1629	195	653	34	34	916
% App. Total	13.1	66.4	14.2	6.4		22.5	63.8	12.3	1.4		12.9	77.5	5.9	3.7		21.3	71.3	3.7	3.7	
PHF	.750	.902	.814	.750	.953	.776	.845	.701	.341	.817	.709	.889	.889	.789	.915	.920	.859	.773	.607	.884

Counts Unlimited Inc.
25286 Jaclyn Avenue
Moreno Valley, CA 92557
951-485-7934

City of Rancho Cucamonga
N/S: Haven Avenue
E/W: Arrow Highway
Weather: Sunny

File Name : RNCHAARPM
Site Code : 9150092
Start Date : 6/2/2009
Page No : 1

Groups Printed- Large 2 Axle Vehicles

	Haven Avenue Southbound					Arrow Highway Westbound					Haven Avenue Northbound					Arrow Highway Eastbound					
Start Time	Left	Thru	Right	RoR	App. Total	Left	Thru	Right	RoR	App. Total	Left	Thru	Right	RoR	App. Total	Left	Thru	Right	RoR	App. Total	Int. Total
04:00 PM	1	1	0	0	2	1	5	1	0	7	1	1	0	0	2	0	5	0	0	5	16
04:15 PM	0	5	0	0	5	1	1	0	0	2	0	6	0	0	6	1	2	0	0	3	16
04:30 PM	0	2	0	0	2	0	1	3	0	4	1	5	0	0	6	0	4	0	0	4	16
04:45 PM	0	1	0	0	1	0	1	0	0	1	2	4	0	0	6	1	1	0	0	2	10
Total	1	9	0	0	10	2	8	4	0	14	4	16	0	0	20	2	12	0	0	14	58
05:00 PM	0	0	0	0	0	0	1	1	0	2	1	0	0	0	1	0	3	0	0	3	6
05:15 PM	0	1	0	0	1	2	2	0	0	4	0	3	0	0	3	0	2	0	0	2	10
05:30 PM	0	1	0	0	1	1	3	0	0	4	0	2	0	0	2	0	4	0	0	4	11
05:45 PM	0	3	0	0	3	0	1	0	0	1	0	2	0	0	2	0	2	0	0	2	8
Total	0	5	0	0	5	3	7	1	0	11	1	7	0	0	8	0	11	0	0	11	35
Grand Total	1	14	0	0	15	5	15	5	0	25	5	23	0	0	28	2	23	0	0	25	93
Apprch %	6.7	93.3	0	0		20	60	20	0		17.9	82.1	0	0		8	92	0	0		
Total %	1.1	15.1	0	0	16.1	5.4	16.1	5.4	0	26.9	5.4	24.7	0	0	30.1	2.2	24.7	0	0	26.9	

	Haven Avenue Southbound					Arrow Highway Westbound					Haven Avenue Northbound					Arrow Highway Eastbound					
Start Time	Left	Thru	Right	RoR	App. Total		Thru	Right	RoR	App. Total		Thru	Right	RoR	App. Total		Thru	Right	RoR	App. Total	Int. Total
Peak Hour Analysis From 04:30 PM to 05:15 PM - Peak 1 of 1																					
Peak Hour for Entire Intersection Begins at 04:30 PM																					
04:30 PM	0	2	0	0	2	0	1	3	0	4	1	5	0	0	6	0	4	0	0	4	16
04:45 PM	0	1	0	0	1	0	1	0	0	1	2	4	0	0	6	1	1	0	0	2	10
05:00 PM	0	0	0	0	0	0	1	1	0	2	1	0	0	0	1	0	3	0	0	3	6
05:15 PM	0	1	0	0	1	2	2	0	0	4	0	3	0	0	3	0	2	0	0	2	10
Total Volume	0	4	0	0	4	2	5	4	0	11	4	12	0	0	16	1	10	0	0	11	42
% App. Total	0	100	0	0		18.2	45.5	36.4	0		25	75	0	0		9.1	90.9	0	0		
PHF	.000	.500	.000	.000	.500	.250	.625	.333	.000	.688	.500	.600	.000	.000	.667	.250	.625	.000	.000	.688	.656

Counts Unlimited Inc.
25286 Jaclyn Avenue
Moreno Valley, CA 92557
951-485-7934

City of Rancho Cucamonga
N/S: Haven Avenue
E/W: Arrow Highway
Weather: Sunny

File Name : RNCHAARPM
Site Code : 9150092
Start Date : 6/2/2009
Page No : 2

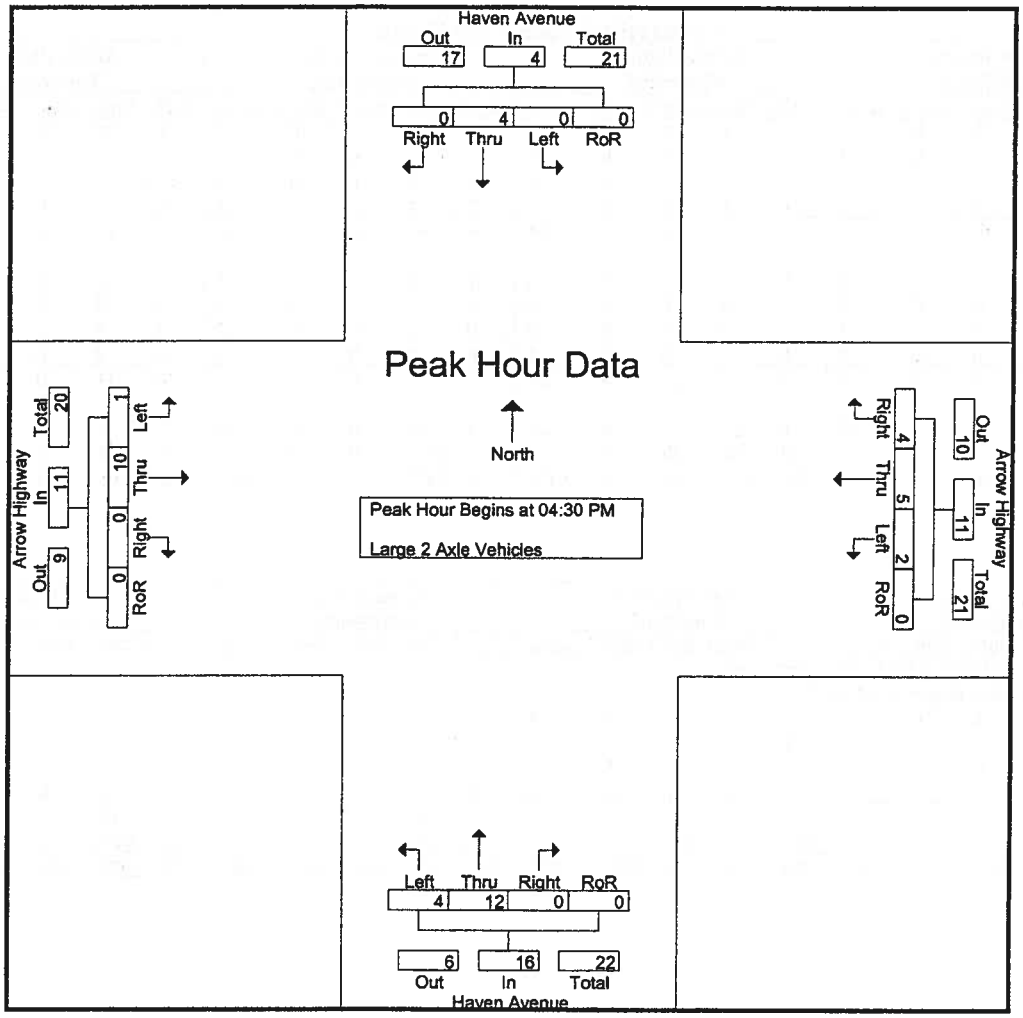

Peak Hour Analysis From 04:30 PM to 05:15 PM - Peak 1 of 1

Peak Hour for Each Approach Begins at:

	04:30 PM					04:30 PM					04:30 PM					04:30 PM				
+0 mins.	0	2	0	0	2	0	1	3	0	4	1	5	0	0	6	0	4	0	0	4
+15 mins.	0	1	0	0	1	0	1	0	0	1	2	4	0	0	6	1	1	0	0	2
+30 mins.	0	0	0	0	0	0	1	1	0	2	1	0	0	0	1	0	3	0	0	3
+45 mins.	0	1	0	0	1	2	2	0	0	4	0	3	0	0	3	0	2	0	0	2
Total Volume	0	4	0	0	4	2	5	4	0	11	4	12	0	0	16	1	10	0	0	11
% App. Total	0	100	0	0		18.2	45.5	36.4	0		25	75	0	0		9.1	90.9	0	0	
PHF	.000	.500	.000	.000	.500	.250	.625	.333	.000	.688	.500	.600	.000	.000	.667	.250	.625	.000	.000	.688

Counts Unlimited Inc.
25286 Jaclyn Avenue
Moreno Valley, CA 92557
951-485-7934

City of Rancho Cucamonga
N/S: Haven Avenue
E/W: Arrow Highway
Weather: Sunny

File Name : RNCHAARPM
Site Code : 9150092
Start Date : 6/2/2009
Page No : 1

Groups Printed- 3 Axle Vehicles

	Haven Avenue Southbound					Arrow Highway Westbound					Haven Avenue Northbound					Arrow Highway Eastbound					
Start Time	Left	Thru	Right	RoR	App. Total	Left	Thru	Right	RoR	App. Total	Left	Thru	Right	RoR	App. Total	Left	Thru	Right	RoR	App. Total	Int. Total
04:00 PM	0	1	0	0	1	1	1	0	0	2	0	1	0	0	1	0	2	0	0	2	6
04:15 PM	0	0	0	0	0	1	0	0	0	1	0	0	0	0	0	0	7	0	0	7	8
04:30 PM	0	0	0	0	0	1	1	0	0	2	0	1	1	0	2	0	4	0	0	4	8
04:45 PM	0	0	0	0	0	0	1	0	0	1	0	0	0	0	0	0	0	0	0	0	1
Total	0	1	0	0	1	3	3	0	0	6	0	2	1	0	3	0	13	0	0	13	23
05:00 PM	0	0	0	0	0	0	0	0	0	0	1	1	0	0	2	1	3	0	0	4	6
05:15 PM	0	0	0	0	0	0	0	0	0	0	0	0	0	0	0	0	1	0	0	1	1
05:30 PM	0	1	0	0	1	0	0	0	0	0	0	0	0	0	0	0	0	0	0	0	1
05:45 PM	0	0	0	0	0	1	0	1	0	2	0	1	0	1	2	0	0	0	0	0	4
Total	0	1	0	0	1	1	0	1	0	2	1	2	0	1	4	1	4	0	0	5	12
Grand Total	0	2	0	0	2	4	3	1	0	8	1	4	1	1	7	1	17	0	0	18	35
Apprch %	0	100	0	0		50	37.5	12.5	0		14.3	57.1	14.3	14.3		5.6	94.4	0	0		
Total %	0	5.7	0	0	5.7	11.4	8.6	2.9	0	22.9	2.9	11.4	2.9	2.9	20	2.9	48.6	0	0	51.4	

	Haven Avenue Southbound					Arrow Highway Westbound					Haven Avenue Northbound					Arrow Highway Eastbound					
Start Time	Left	Thru	Right	RoR	App. Total		Thru	Right	RoR	App. Total		Thru	Right	RoR	App. Total		Thru	Right	RoR	App. Total	Int. Total
Peak Hour Analysis From 04:30 PM to 05:15 PM - Peak 1 of 1																					
Peak Hour for Entire Intersection Begins at 04:30 PM																					
04:30 PM	0	0	0	0	0	1	1	0	0	2	0	1	1	0	2	0	4	0	0	4	8
04:45 PM	0	0	0	0	0	0	1	0	0	1	0	0	0	0	0	0	0	0	0	0	1
05:00 PM	0	0	0	0	0	0	0	0	0	0	1	1	0	0	2	1	3	0	0	4	6
05:15 PM	0	0	0	0	0	0	0	0	0	0	0	0	0	0	0	0	1	0	0	1	1
Total Volume	0	0	0	0	0	1	2	0	0	3	1	2	1	0	4	1	8	0	0	9	16
% App. Total	0	0	0	0		33.3	66.7	0	0		25	50	25	0		11.1	88.9	0	0		
PHF	.000	.000	.000	.000	.000	.250	.500	.000	.000	.375	.250	.500	.250	.000	.500	.250	.500	.000	.000	.563	.500

Counts Unlimited Inc.
25286 Jaclyn Avenue
Moreno Valley, CA 92557
951-485-7934

City of Rancho Cucamonga
N/S: Haven Avenue
E/W: Arrow Highway
Weather: Sunny

File Name : RNCHAARPM
Site Code : 9150092
Start Date : 6/2/2009
Page No : 2

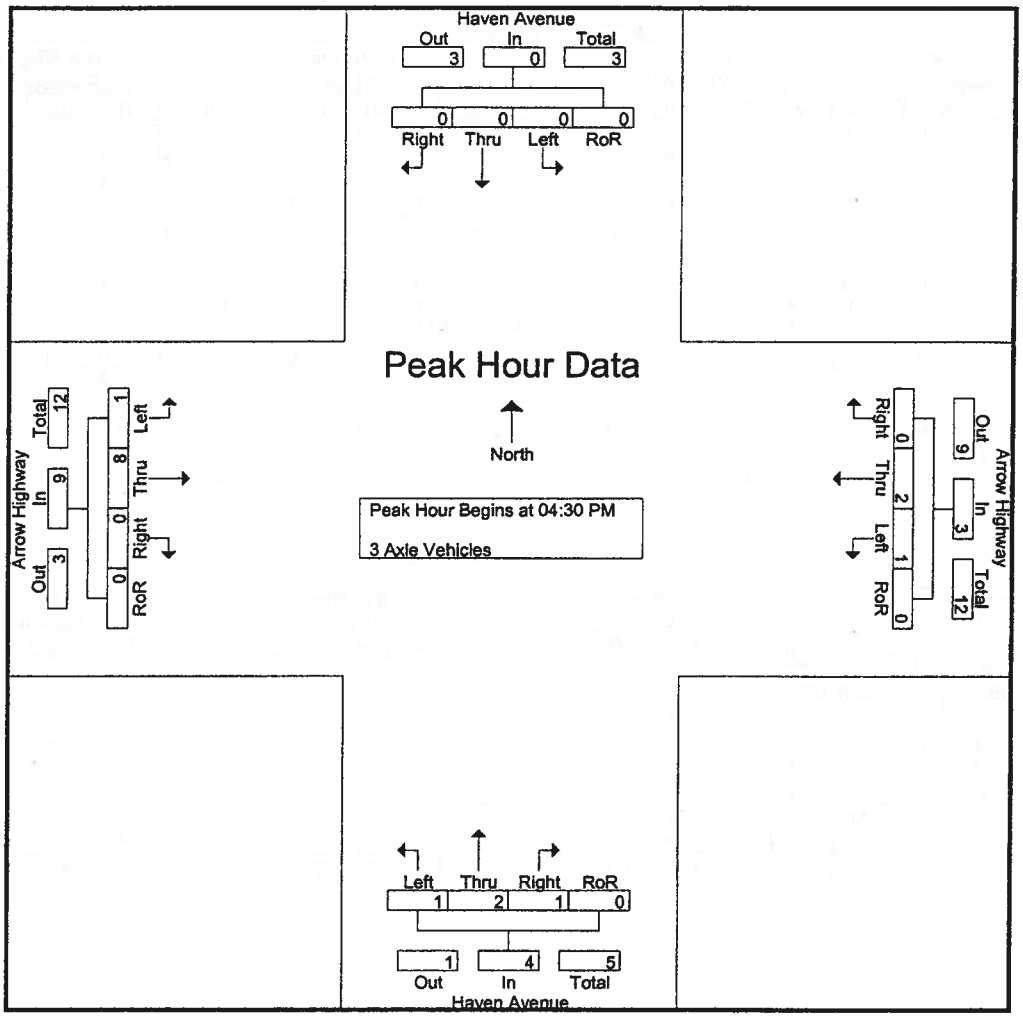

Peak Hour Analysis From 04:30 PM to 05:15 PM - Peak 1 of 1

Peak Hour for Each Approach Begins at:

	04:30 PM					04:30 PM					04:30 PM					04:30 PM				
+0 mins.	0	0	0	0	0	1	1	0	0	2	0	1	1	0	2	0	4	0	0	4
+15 mins.	0	0	0	0	0	0	1	0	0	1	0	0	0	0	0	0	0	0	0	0
+30 mins.	0	0	0	0	0	0	0	0	0	0	1	1	0	0	2	1	3	0	0	4
+45 mins.	0	0	0	0	0	0	0	0	0	0	0	0	0	0	0	0	1	0	0	1
Total Volume	0	0	0	0	0	1	2	0	0	3	1	2	1	0	4	1	8	0	0	9
% App. Total	0	0	0	0		33.3	66.7	0	0		25	50	25	0		11.1	88.9	0	0	
PHF	.000	.000	.000	.000	.000	.250	.500	.000	.000	.375	.250	.500	.250	.000	.500	.250	.500	.000	.000	.563

Counts Unlimited Inc.
25286 Jaclyn Avenue
Moreno Valley, CA 92557
951-485-7934

City of Rancho Cucamonga
N/S: Haven Avenue
E/W: Arrow Highway
Weather: Sunny

File Name : RNCHAARPM
Site Code : 9150092
Start Date : 6/2/2009
Page No : 1

Groups Printed- 4+ Axle Trucks

	Haven Avenue Southbound					Arrow Highway Westbound					Haven Avenue Northbound					Arrow Highway Eastbound					
Start Time	Left	Thru	Right	RoR	App. Total	Left	Thru	Right	RoR	App. Total	Left	Thru	Right	RoR	App. Total	Left	Thru	Right	RoR	App. Total	Int. Total
04:00 PM	0	0	0	0	0	0	1	0	0	1	0	0	0	0	0	0	2	1	0	3	4
04:15 PM	0	0	0	0	0	0	1	0	0	1	1	0	0	0	1	0	0	0	0	0	2
04:30 PM	0	0	0	0	0	0	1	0	0	1	0	0	0	0	0	0	0	2	0	2	3
04:45 PM	0	0	0	0	0	0	0	0	0	0	0	0	0	0	0	0	1	0	0	1	1
Total	0	0	0	0	0	0	3	0	0	3	1	0	0	0	1	0	3	3	0	6	10
05:00 PM	0	1	0	0	1	0	1	0	0	1	0	0	0	0	0	0	0	0	0	0	2
05:15 PM	0	1	0	0	1	0	0	0	0	0	0	0	0	0	0	0	0	1	0	1	2
05:30 PM	0	0	0	0	0	0	0	0	0	0	0	0	0	0	0	0	1	0	0	1	1
05:45 PM	0	1	0	0	1	1	0	0	0	1	0	0	0	0	0	0	0	0	1	1	3
Total	0	3	0	0	3	1	1	0	0	2	0	0	0	0	0	0	1	1	1	3	8
Grand Total	0	3	0	0	3	1	4	0	0	5	1	0	0	0	1	0	4	4	1	9	18
Apprch %	0	100	0	0		20	80	0	0		100	0	0	0		0	44.4	44.4	11.1		
Total %	0	16.7	0	0	16.7	5.6	22.2	0	0	27.8	5.6	0	0	0	5.6	0	22.2	22.2	5.6	50	

	Haven Avenue Southbound					Arrow Highway Westbound					Haven Avenue Northbound					Arrow Highway Eastbound					
Start Time	Left	Thru	Right	RoR	App. Total		Thru	Right	RoR	App. Total		Thru	Right	RoR	App. Total		Thru	Right	RoR	App. Total	Int. Total
Peak Hour Analysis From 04:30 PM to 05:15 PM - Peak 1 of 1																					
Peak Hour for Entire Intersection Begins at 04:30 PM																					
04:30 PM	0	0	0	0	0	0	1	0	0	1	0	0	0	0	0	0	0	2	0	2	3
04:45 PM	0	0	0	0	0	0	0	0	0	0	0	0	0	0	0	0	1	0	0	1	1
05:00 PM	0	1	0	0	1	0	1	0	0	1	0	0	0	0	0	0	0	0	0	0	2
05:15 PM	0	1	0	0	1	0	0	0	0	0	0	0	0	0	0	0	0	1	0	1	2
Total Volume	0	2	0	0	2	0	2	0	0	2	0	0	0	0	0	0	1	3	0	4	8
% App. Total	0	100	0	0		0	100	0	0		0	0	0	0		0	25	75	0		
PHF	.000	.500	.000	.000	.500	.000	.500	.000	.000	.500	.000	.000	.000	.000	.000	.000	.250	.375	.000	.500	.667

Counts Unlimited Inc.
25286 Jaclyn Avenue
Moreno Valley, CA 92557
951-485-7934

City of Rancho Cucamonga
N/S: Haven Avenue
E/W: Arrow Highway
Weather: Sunny

File Name : RNCHAARPM
Site Code : 9150092
Start Date : 6/2/2009
Page No : 2

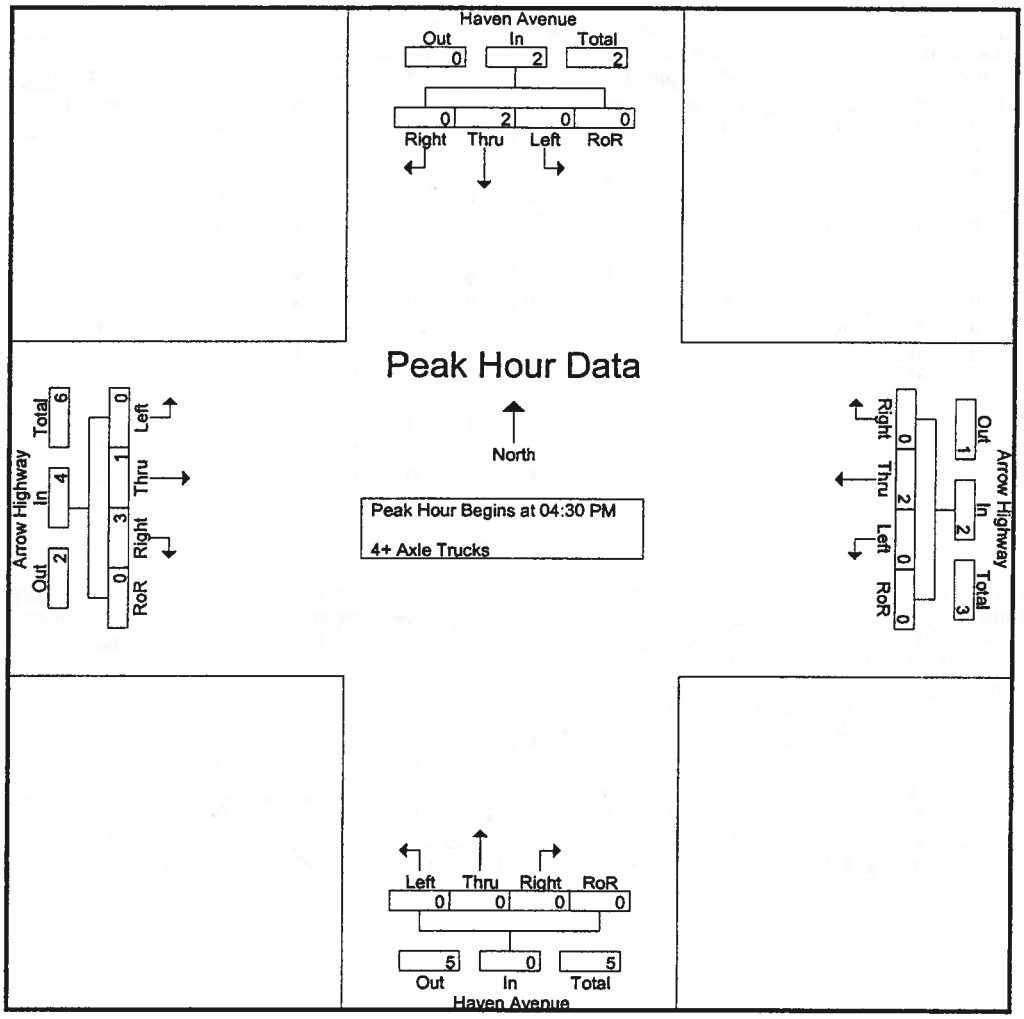

Peak Hour Analysis From 04:30 PM to 05:15 PM - Peak 1 of 1

Peak Hour for Each Approach Begins at:

	04:30 PM					04:30 PM					04:30 PM					04:30 PM				
+0 mins.	0	0	0	0	0	0	1	0	0	1	0	0	0	0	0	0	0	2	0	2
+15 mins.	0	0	0	0	0	0	0	0	0	0	0	0	0	0	0	0	1	0	0	1
+30 mins.	0	1	0	0	1	0	1	0	0	1	0	0	0	0	0	0	0	0	0	0
+45 mins.	0	1	0	0	1	0	0	0	0	0	0	0	0	0	0	0	0	1	0	1
Total Volume	0	2	0	0	2	0	2	0	0	2	0	0	0	0	0	0	1	3	0	4
% App. Total	0	100	0	0		0	100	0	0		0	0	0	0		0	25	75	0	
PHF	.000	.500	.000	.000	.500	.000	.500	.000	.000	.500	.000	.000	.000	.000	.000	.000	.250	.375	.000	.500

PASSENGER CAR EQUIVALENCY PEAK HOUR COUNT SUMMARY

INTERSECTION 15
Milliken Avenue (NS) / Baseline Road (EW)

AM PEAK HOUR

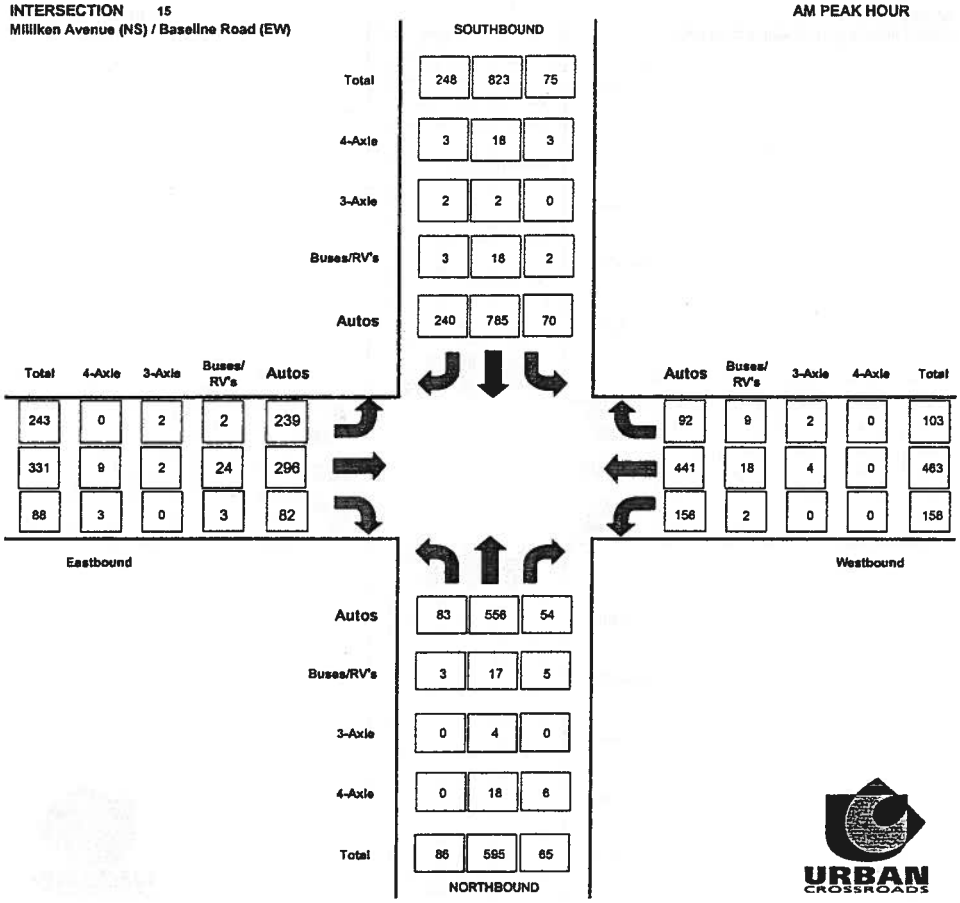

URBAN CROSSROADS

INTERSECTION 15
Milliken Avenue (NS) / Baseline Road (EW)

PM PEAK HOUR

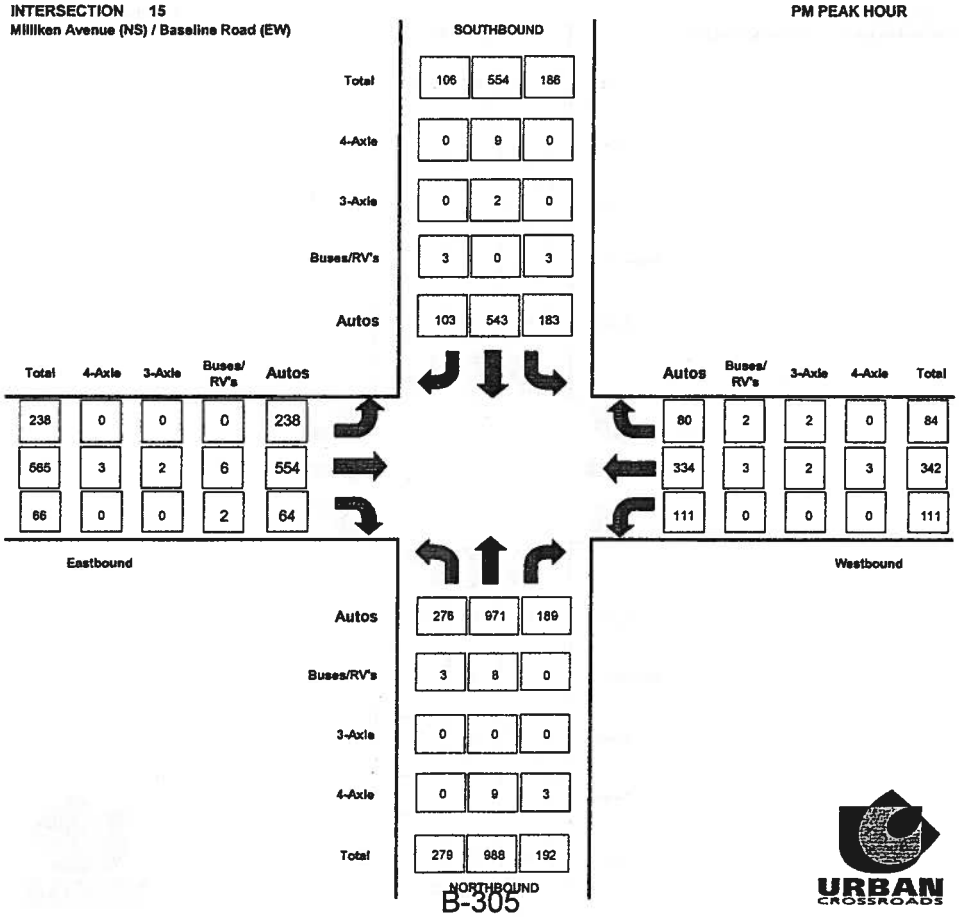

URBAN CROSSROADS

RAW PEAK HOUR COUNT SUMMARY

INTERSECTION 15
Milliken Avenue (NS) / Baseline Road (EW)

AM PEAK HOUR

SOUTHBOUND

Total	244	804	72
4-Axle	1	6	1
3-Axle	1	1	0
Buses/RV's	2	12	1
Autos	240	785	70

Eastbound

Total	4-Axle	3-Axle	Buses/ RV's	Autos
241	0	1	1	239
316	3	1	16	296
85	1	0	2	82

Westbound

Autos	Buses/ RV's	3-Axle	4-Axle	Total
92	6	1	0	99
441	12	2	0	455
156	1	0	0	157

NORTHBOUND

Autos	83	556	54
Buses/RV's	2	11	3
3-Axle	0	2	0
4-Axle	0	8	2
Total	85	575	59

URBAN CROSSROADS

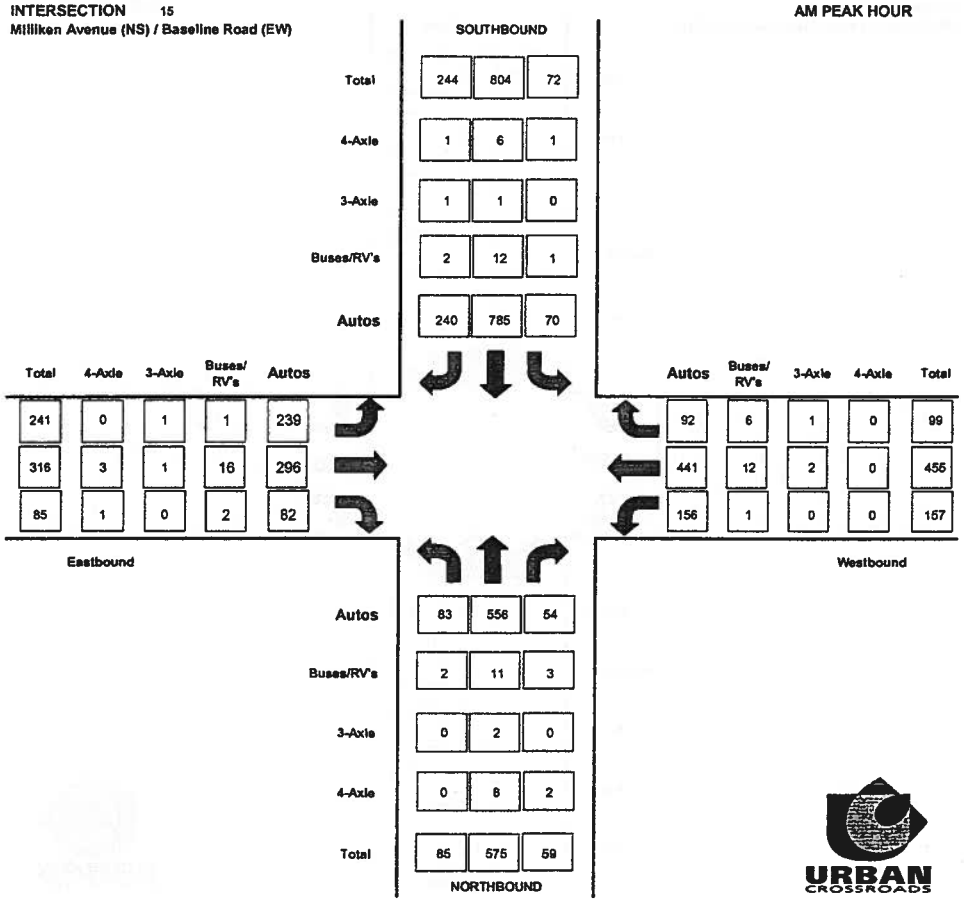

INTERSECTION 15
Milliken Avenue (NS) / Baseline Road (EW)

PM PEAK HOUR

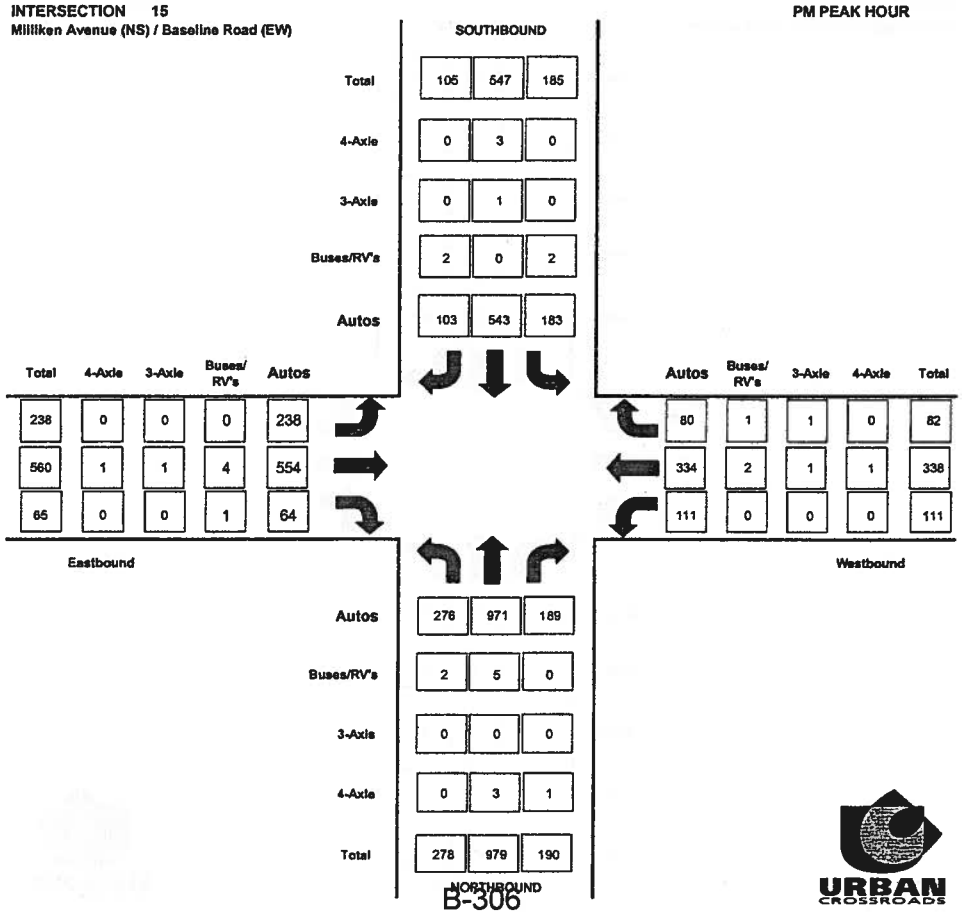

SOUTHBOUND

Total	105	547	185
4-Axle	0	3	0
3-Axle	0	1	0
Buses/RV's	2	0	2
Autos	103	543	183

Eastbound

Total	4-Axle	3-Axle	Buses/ RV's	Autos
238	0	0	0	238
560	1	1	4	554
65	0	0	1	64

Westbound

Autos	Buses/ RV's	3-Axle	4-Axle	Total
80	1	1	0	82
334	2	1	1	338
111	0	0	0	111

NORTHBOUND

Autos	276	971	189
Buses/RV's	2	5	0
3-Axle	0	0	0
4-Axle	0	3	1
Total	278	979	190

URBAN CROSSROADS

U:\Ubuntu_08800-07000\08700-08700-Excel\Existing Vols\2 Graphics Summary_Non PCE

(15)

Counts Unlimited Inc.
25286 Jaclyn Avenue
Moreno Valley, CA 92557
951-485-7934

City of Rancho Cucamonga
N/S: Milliken Avenue
E/W: Baseline Road
Weather: Sunny

File Name : RNCMIBAAM
Site Code : 9150075
Start Date : 6/9/2009
Page No : 1

Groups Printed- Passenger Vehicles - Large 2 Axle Vehicles - 3 Axle Vehicles - 4+ Axle Trucks

	Milliken Avenue Southbound					Baseline Road Westbound					Milliken Avenue Northbound					Baseline Road Eastbound					
Start Time	Left	Thru	Right	RoR	App. Total	Left	Thru	Right	RoR	App. Total	Left	Thru	Right	RoR	App. Total	Left	Thru	Right	RoR	App. Total	Int. Total
07:00 AM	13	164	23	15	215	31	83	11	14	139	16	140	11	6	173	64	88	9	5	166	693
07:15 AM	21	192	34	28	275	47	121	15	12	195	23	203	9	8	243	96	88	8	10	202	915
07:30 AM	21	202	55	47	325	45	148	14	9	216	26	113	2	11	152	49	69	19	3	140	833
07:45 AM	17	246	27	15	305	34	103	18	6	161	20	119	5	7	151	32	71	22	9	134	751
Total	72	804	139	105	1120	157	455	58	41	711	85	575	27	32	719	241	316	58	27	642	3192
08:00 AM	33	213	27	20	293	43	89	14	10	156	28	87	10	1	126	40	63	8	7	118	693
08:15 AM	20	149	34	35	238	35	89	5	19	148	23	93	3	2	121	53	75	16	11	155	662
08:30 AM	19	127	26	18	190	22	68	10	10	110	24	77	4	4	109	21	69	16	7	113	522
08:45 AM	28	127	19	8	182	23	78	4	9	114	37	92	4	4	137	15	58	13	7	93	526
Total	100	616	106	81	903	123	324	33	48	528	112	349	21	11	493	129	265	53	32	479	2403
Grand Total	172	1420	245	186	2023	280	779	91	89	1239	197	924	48	43	1212	370	581	111	59	1121	5595
Apprch %	8.5	70.2	12.1	9.2		22.6	62.9	7.3	7.2		16.3	76.2	4	3.5		33	51.8	9.9	5.3		
Total %	3.1	25.4	4.4	3.3	36.2	5	13.9	1.6	1.6	22.1	3.5	16.5	0.9	0.8	21.7	6.6	10.4	2	1.1	20	
Passenger Vehicles		1392																			
% Passenger Vehicles	97.7	98	95.9	98.9	97.8	97.9	96.8	93.4	96.6	96.8	97.5	96.3	91.7	95.3	96.3	98.1	94.8	96.4	98.3	96.3	96.9
Large 2 Axle Vehicles																					
% Large 2 Axle Vehicles	1.2	1.3	2	1.1	1.3	1.1	3	4.4	2.2	2.6	2.5	2.2	4.2	4.7	2.4	1.1	4	2.7	1.7	2.8	2.1
3 Axle Vehicles	1	2	4	0	7	0	2	2	0	4	0	3	0	0	3	2	2	0	0	4	18
% 3 Axle Vehicles	0.6	0.1	1.6	0	0.3	0	0.3	2.2	0	0.3	0	0.3	0	0	0.2	0.5	0.3	0	0	0.4	0.3
4+ Axle Trucks	1	8	1	0	10	3	0	0	1	4	0	11	2	0	13	1	5	1	0	7	34
% 4+ Axle Trucks																					

	Milliken Avenue Southbound					Baseline Road Westbound					Milliken Avenue Northbound					Baseline Road Eastbound					
Start Time	Left	Thru	Right	RoR	App. Total	Left	Thru	Right	RoR	App. Total	Left	Thru	Right	RoR	App. Total	Left	Thru	Right	RoR	App. Total	Int. Total
Peak Hour Analysis From 07:00 AM to 08:45 AM - Peak 1 of 1																					
Peak Hour for Entire Intersection Begins at 07:00 AM																					
07:00 AM	13	164	23	15	215	31	83	11	14	139	16	140	11	6	173	64	88	9	5	166	693
07:15 AM	21	192	34	28	275	47	121	15	12	195	23	203	9	8	243	96	88	8	10	202	915
07:30 AM	21	202	55	47	325	45	148	14	9	216	26	113	2	11	152	49	69	19	3	140	833
07:45 AM	17	246	27	15	305	34	103	18	6	161	20	119	5	7	151	32	71	22	9	134	751
Total Volume	72	804	139	105	1120	157	455	58	41	711	85	575	27	32	719	241	316	58	27	642	3192
% App. Total	6.4	71.8	12.4	9.4		22.1	64	8.2	5.8		11.8	80	3.8	4.5		37.5	49.2	9	4.2		
PHF	.857	.817	.632	.559	.862	.835	.769	.806	.732	.823	.817	.708	.614	.727	.740	.628	.898	.659	.675	.795	.872

Counts Unlimited Inc.
25286 Jaclyn Avenue
Moreno Valley, CA 92557
951-485-7934

City of Rancho Cucamonga
N/S: Milliken Avenue
E/W: Baseline Road
Weather: Sunny

File Name : RNCMIBAAM
Site Code : 9150075
Start Date : 6/9/2009
Page No : 2

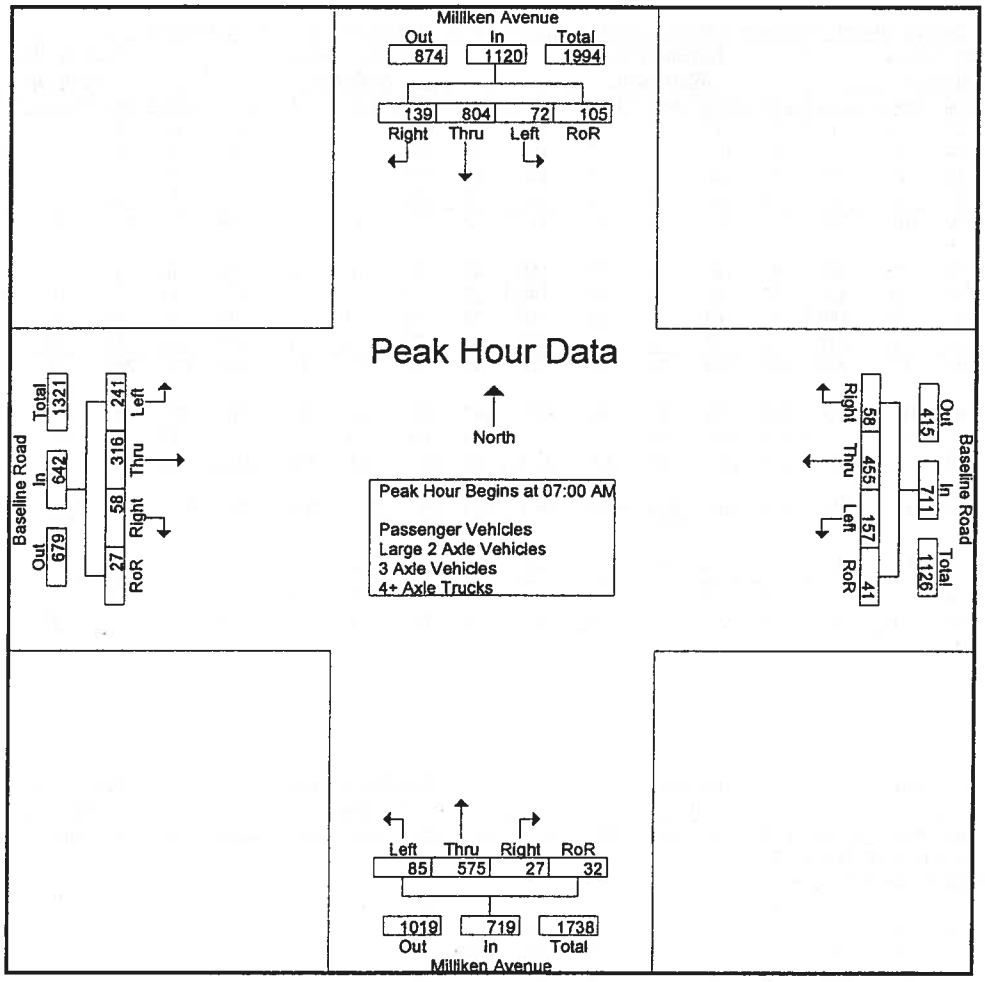

Peak Hour Analysis From 07:00 AM to 08:45 AM - Peak 1 of 1

Peak Hour for Each Approach Begins at:

	07:15 AM					07:15 AM					07:00 AM					07:00 AM				
+0 mins.	21	192	34	28	275	47	121	15	12	195	16	140	11	6	173	64	88	9	5	166
+15 mins.	21	202	55	47	325	45	148	14	9	216	23	203	9	8	243	96	88	8	10	202
+30 mins.	17	246	27	15	305	34	103	18	6	161	26	113	2	11	152	49	69	19	3	140
+45 mins.	33	213	27	20	293	43	89	14	10	156	20	119	5	7	151	32	71	22	9	134
Total Volume	92	853	143	110	1198	169	461	61	37	728	85	575	27	32	719	241	316	58	27	642
% App. Total	7.7	71.2	11.9	9.2		23.2	63.3	8.4	5.1		11.8	80	3.8	4.5		37.5	49.2	9	4.2	
PHF	.697	.867	.650	.585	.922	.899	.779	.847	.771	.843	.817	.708	.614	.727	.740	.628	.898	.659	.675	.795

Counts Unlimited Inc.
25286 Jaclyn Avenue
Moreno Valley, CA 92557
951-485-7934

City of Rancho Cucamonga
N/S: Milliken Avenue
E/W: Baseline Road
Weather: Sunny

File Name : RNCMIBAAM
Site Code : 9150075
Start Date : 6/9/2009
Page No : 1

Groups Printed- Passenger Vehicles

	Milliken Avenue Southbound					Baseline Road Westbound					Milliken Avenue Northbound					Baseline Road Eastbound					
Start Time	Left	Thru	Right	RoR	App. Total	Left	Thru	Right	RoR	App. Total	Left	Thru	Right	RoR	App. Total	Left	Thru	Right	RoR	App. Total	Int. Total
07:00 AM	13	160	23	15	211	30	81	8	13	132	16	133	9	6	164	63	83	9	5	160	667
07:15 AM	21	189	34	28	272	47	118	14	11	190	23	199	9	7	238	96	83	7	10	196	896
07:30 AM	20	193	55	46	314	45	144	13	9	211	25	110	1	11	147	48	64	18	3	133	805
07:45 AM	16	243	24	15	298	34	98	18	6	156	19	114	5	6	144	32	66	21	9	128	726
Total	70	785	136	104	1095	156	441	53	39	689	83	556	24	30	693	239	296	55	27	617	3094
08:00 AM	32	212	26	20	290	42	86	13	9	150	28	87	10	1	126	37	61	8	6	112	678
08:15 AM	20	149	33	34	236	35	87	5	19	146	22	89	3	2	116	53	71	15	11	150	648
08:30 AM	19	123	22	18	182	19	64	10	10	103	23	70	3	4	100	21	65	16	7	109	494
08:45 AM	27	123	18	8	176	22	76	4	9	111	36	88	4	4	132	13	58	13	7	91	510
Total	98	607	99	80	884	118	313	32	47	510	109	334	20	11	474	124	255	52	31	462	2330
Grand Total	168	1392	235	184	1979	274	754	85	86	1199	192	890	44	41	1167	363	551	107	58	1079	5424
Apprch %	8.5	70.3	11.9	9.3		22.9	62.9	7.1	7.2		16.5	76.3	3.8	3.5		33.6	51.1	9.9	5.4		
Total %	3.1	25.7	4.3	3.4	36.5	5.1	13.9	1.6	1.6	22.1	3.5	16.4	0.8	0.8	21.5	6.7	10.2	2	1.1	19.9	

	Milliken Avenue Southbound					Baseline Road Westbound					Milliken Avenue Northbound					Baseline Road Eastbound					
Start Time	Left	Thru	Right	RoR	App. Total		Thru	Right	RoR	App. Total		Thru	Right	RoR	App. Total		Thru	Right	RoR	App. Total	Int. Total
Peak Hour Analysis From 07:00 AM to 07:45 AM - Peak 1 of 1																					
Peak Hour for Entire Intersection Begins at 07:00 AM																					
07:00 AM	13	160	23	15	211	30	81	8	13	132	16	133	9	6	164	63	83	9	5	160	667
07:15 AM	21	189	34	28	272	47	118	14	11	190	23	199	9	7	238	96	83	7	10	196	896
07:30 AM	20	193	55	46	314	45	144	13	9	211	25	110	1	11	147	48	64	18	3	133	805
07:45 AM	16	243	24	15	298	34	98	18	6	156	19	114	5	6	144	32	66	21	9	128	726
Total Volume	70	785	136	104	1095	156	441	53	39	689	83	556	24	30	693	239	296	55	27	617	3094
% App. Total	6.4	71.7	12.4	9.5		22.6	64	7.7	5.7		12	80.2	3.5	4.3		38.7	48	8.9	4.4		
PHF	.833	.808	.618	.565	.872	.830	.766	.736	.750	.816	.830	.698	.667	.682	.728	.622	.892	.655	.675	.787	.863

Counts Unlimited Inc.
25286 Jaclyn Avenue
Moreno Valley, CA 92557
951-485-7934

City of Rancho Cucamonga
N/S: Milliken Avenue
E/W: Baseline Road
Weather: Sunny

File Name : RNCMIBAAM
Site Code : 9150075
Start Date : 6/9/2009
Page No : 2

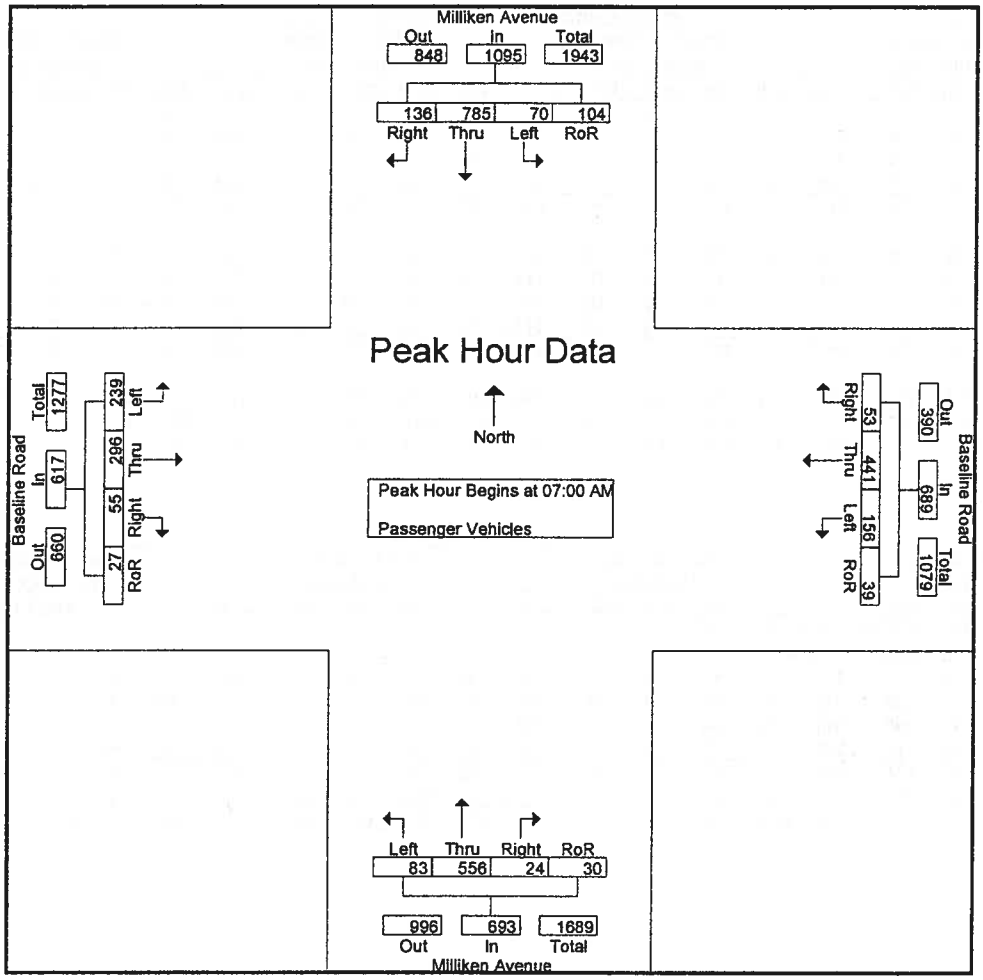

Peak Hour Analysis From 07:00 AM to 07:45 AM - Peak 1 of 1

Peak Hour for Each Approach Begins at:

	07:00 AM					07:00 AM					07:00 AM					07:00 AM				
+0 mins.	13	160	23	15	211	30	81	8	**13**	132	16	133	**9**	6	164	63	**83**	9	5	160
+15 mins.	**21**	189	34	28	272	**47**	118	14	11	190	23	**199**	9	7	**238**	**96**	83	7	**10**	**196**
+30 mins.	20	193	**55**	**46**	**314**	45	**144**	13	9	**211**	**25**	110	1	**11**	147	48	64	18	3	133
+45 mins.	16	**243**	24	15	298	34	98	**18**	6	156	19	114	5	6	144	32	66	**21**	9	128
Total Volume	70	785	136	104	1095	156	441	53	39	689	83	556	24	30	693	239	296	55	27	617
% App. Total	6.4	71.7	12.4	9.5		22.6	64	7.7	5.7		12	80.2	3.5	4.3		38.7	48	8.9	4.4	
PHF	.833	.808	.618	.565	.872	.830	.766	.736	.750	.816	.830	.698	.667	.682	.728	.622	.892	.655	.675	.787

Counts Unlimited Inc.
25286 Jaclyn Avenue
Moreno Valley, CA 92557
951-485-7934

City of Rancho Cucamonga
N/S: Milliken Avenue
E/W: Baseline Road
Weather: Sunny

File Name : RNCMIBAAM
Site Code : 9150075
Start Date : 6/9/2009
Page No : 1

Groups Printed- Large 2 Axle Vehicles

	Milliken Avenue Southbound					Baseline Road Westbound					Milliken Avenue Northbound					Baseline Road Eastbound					
Start Time	Left	Thru	Right	RoR	App. Total	Left	Thru	Right	RoR	App. Total	Left	Thru	Right	RoR	App. Total	Left	Thru	Right	RoR	App. Total	Int. Total
07:00 AM	0	1	0	0	1	1	2	3	1	7	0	4	1	0	5	0	5	0	0	5	18
07:15 AM	0	1	0	0	1	0	2	1	1	4	0	2	0	1	3	0	3	1	0	4	12
07:30 AM	0	8	0	1	9	0	4	0	0	4	1	2	0	0	3	1	5	0	0	6	22
07:45 AM	1	2	1	0	4	0	4	0	0	4	1	3	0	1	5	0	3	1	0	4	17
Total	1	12	1	1	15	1	12	4	2	19	2	11	1	2	16	1	16	2	0	19	69
08:00 AM	0	0	1	0	1	1	3	0	0	4	0	0	0	0	0	2	2	0	1	5	10
08:15 AM	0	0	0	1	1	0	2	0	0	2	1	2	0	0	3	0	3	1	0	4	10
08:30 AM	0	3	3	0	6	1	4	0	0	5	1	4	1	0	6	0	2	0	0	2	19
08:45 AM	1	3	0	0	4	0	2	0	0	2	1	3	0	0	4	1	0	0	0	1	11
Total	1	6	4	1	12	2	11	0	0	13	3	9	1	0	13	3	7	1	1	12	50
Grand Total	2	18	5	2	27	3	23	4	2	32	5	20	2	2	29	4	23	3	1	31	119
Apprch %	7.4	66.7	18.5	7.4		9.4	71.9	12.5	6.2		17.2	69	6.9	6.9		12.9	74.2	9.7	3.2		
Total %	1.7	15.1	4.2	1.7	22.7	2.5	19.3	3.4	1.7	26.9	4.2	16.8	1.7	1.7	24.4	3.4	19.3	2.5	0.8	26.1	

	Milliken Avenue Southbound					Baseline Road Westbound					Milliken Avenue Northbound					Baseline Road Eastbound					
Start Time	Left	Thru	Right	RoR	App. Total		Thru	Right	RoR	App. Total		Thru	Right	RoR	App. Total		Thru	Right	RoR	App. Total	Int. Total
Peak Hour Analysis From 07:00 AM to 07:45 AM - Peak 1 of 1																					
Peak Hour for Entire Intersection Begins at 07:00 AM																					
07:00 AM	0	1	0	0	1	1	2	3	1	7	0	4	1	0	5	0	5	0	0	5	18
07:15 AM	0	1	0	0	1	0	2	1	1	4	0	2	0	1	3	0	3	1	0	4	12
07:30 AM	0	8	0	1	9	0	4	0	0	4	1	2	0	0	3	1	5	0	0	6	22
07:45 AM	1	2	1	0	4	0	4	0	0	4	1	3	0	1	5	0	3	1	0	4	17
Total Volume	1	12	1	1	15	1	12	4	2	19	2	11	1	2	16	1	16	2	0	19	69
% App. Total	6.7	80	6.7	6.7		5.3	63.2	21.1	10.5		12.5	68.8	6.2	12.5		5.3	84.2	10.5	0		
PHF	.250	.375	.250	.250	.417	.250	.750	.333	.500	.679	.500	.688	.250	.500	.800	.250	.800	.500	.000	.792	.784

Counts Unlimited Inc.
25286 Jaclyn Avenue
Moreno Valley, CA 92557
951-485-7934

City of Rancho Cucamonga
N/S: Milliken Avenue
E/W: Baseline Road
Weather: Sunny

File Name : RNCMIBAAM
Site Code : 9150075
Start Date : 6/9/2009
Page No : 2

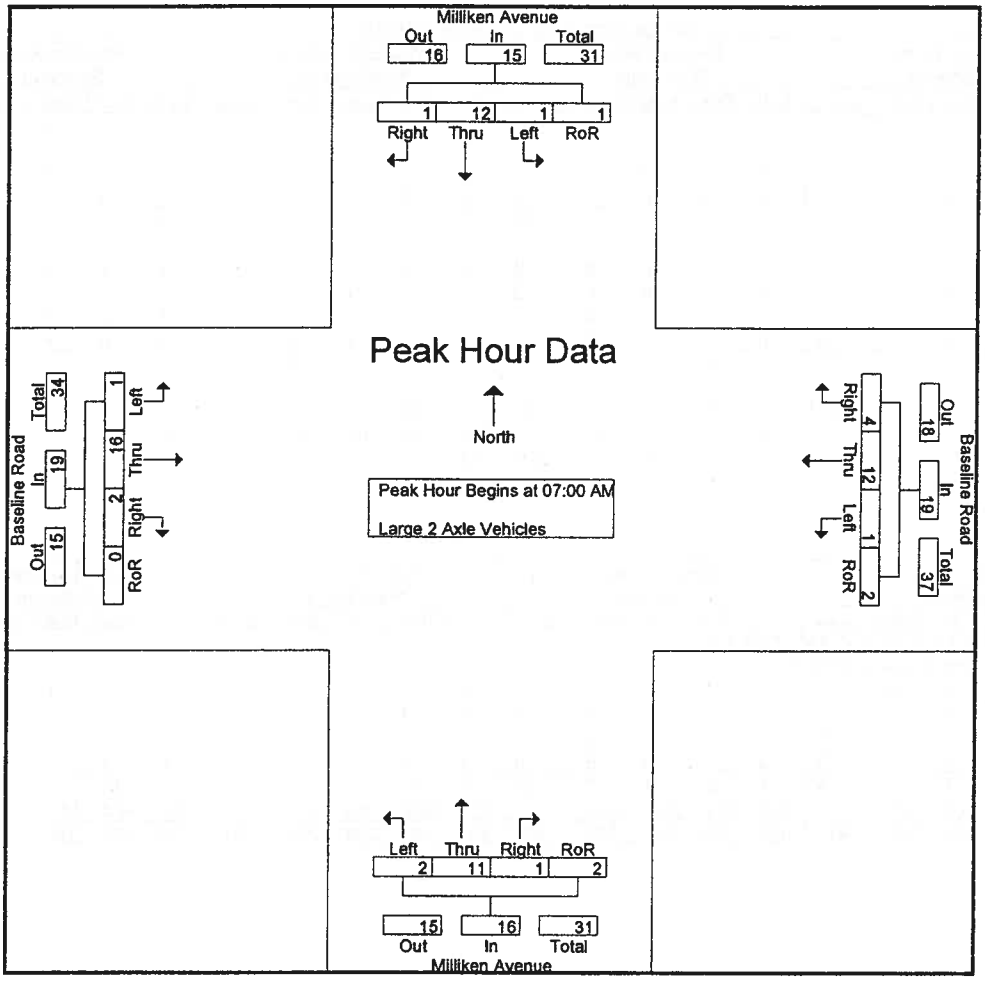

Peak Hour Analysis From 07:00 AM to 07:45 AM - Peak 1 of 1

Peak Hour for Each Approach Begins at:

	07:00 AM					07:00 AM					07:00 AM					07:00 AM				
+0 mins.	0	1	0	0	1	1	2	3	1	7	0	4	1	0	5	0	5	0	0	5
+15 mins.	0	1	0	0	1	0	2	1	1	4	0	2	0	1	3	0	3	1	0	4
+30 mins.	0	8	0	1	9	0	4	0	0	4	1	2	0	0	3	1	5	0	0	6
+45 mins.	1	2	1	0	4	0	4	0	0	4	1	3	0	1	5	0	3	1	0	4
Total Volume	1	12	1	1	15	1	12	4	2	19	2	11	1	2	16	1	16	2	0	19
% App. Total	6.7	80	6.7	6.7		5.3	63.2	21.1	10.5		12.5	68.8	6.2	12.5		5.3	84.2	10.5	0	
PHF	.250	.375	.250	.250	.417	.250	.750	.333	.500	.679	.500	.688	.250	.500	.800	.250	.800	.500	.000	.792

Counts Unlimited Inc.
25286 Jaclyn Avenue
Moreno Valley, CA 92557
951-485-7934

City of Rancho Cucamonga
N/S: Milliken Avenue
E/W: Baseline Road
Weather: Sunny

File Name : RNCMIBAAM
Site Code : 9150075
Start Date : 6/9/2009
Page No : 1

Groups Printed- 3 Axle Vehicles

	Milliken Avenue Southbound					Baseline Road Westbound					Milliken Avenue Northbound					Baseline Road Eastbound					
Start Time	Left	Thru	Right	RoR	App. Total	Left	Thru	Right	RoR	App. Total	Left	Thru	Right	RoR	App. Total	Left	Thru	Right	RoR	App. Total	Int. Total
07:00 AM	0	1	0	0	1	0	0	0	0	0	0	1	0	0	1	1	0	0	0	1	3
07:15 AM	0	0	0	0	0	0	1	0	0	1	0	1	0	0	1	0	1	0	0	1	3
07:30 AM	0	0	0	0	0	0	0	1	0	1	0	0	0	0	0	0	0	0	0	0	1
07:45 AM	0	0	1	0	1	0	1	0	0	1	0	0	0	0	0	0	0	0	0	0	2
Total	0	1	1	0	2	0	2	1	0	3	0	2	0	0	2	1	1	0	0	2	9
08:00 AM	1	1	0	0	2	0	0	1	0	1	0	0	0	0	0	0	0	0	0	0	3
08:15 AM	0	0	1	0	1	0	0	0	0	0	0	0	0	0	0	0	1	0	0	1	2
08:30 AM	0	0	1	0	1	0	0	0	0	0	0	1	0	0	1	0	0	0	0	0	2
08:45 AM	0	0	1	0	1	0	0	0	0	0	0	0	0	0	0	1	0	0	0	1	2
Total	1	1	3	0	5	0	0	1	0	1	0	1	0	0	1	1	1	0	0	2	9
Grand Total	1	2	4	0	7	0	2	2	0	4	0	3	0	0	3	2	2	0	0	4	18
Apprch %	14.3	28.6	57.1	0		0	50	50	0		0	100	0	0		50	50	0	0		
Total %	5.6	11.1	22.2	0	38.9	0	11.1	11.1	0	22.2	0	16.7	0	0	16.7	11.1	11.1	0	0	22.2	

	Milliken Avenue Southbound					Baseline Road Westbound					Milliken Avenue Northbound					Baseline Road Eastbound					
Start Time	Left	Thru	Right	RoR	App. Total		Thru	Right	RoR	App. Total		Thru	Right	RoR	App. Total		Thru	Right	RoR	App. Total	Int. Total
Peak Hour Analysis From 07:00 AM to 07:45 AM - Peak 1 of 1																					
Peak Hour for Entire Intersection Begins at 07:00 AM																					
07:00 AM	0	1	0	0	1	0	0	0	0	0	0	1	0	0	1	1	0	0	0	1	3
07:15 AM	0	0	0	0	0	0	1	0	0	1	0	1	0	0	1	0	1	0	0	1	3
07:30 AM	0	0	0	0	0	0	0	1	0	1	0	0	0	0	0	0	0	0	0	0	1
07:45 AM	0	0	1	0	1	0	1	0	0	1	0	0	0	0	0	0	0	0	0	0	2
Total Volume	0	1	1	0	2	0	2	1	0	3	0	2	0	0	2	1	1	0	0	2	9
% App. Total	0	50	50	0		0	66.7	33.3	0		0	100	0	0		50	50	0	0		
PHF	.000	.250	.250	.000	.500	.000	.500	.250	.000	.750	.000	.500	.000	.000	.500	.250	.250	.000	.000	.500	.750

Counts Unlimited Inc.
25286 Jaclyn Avenue
Moreno Valley, CA 92557
951-485-7934

City of Rancho Cucamonga
N/S: Milliken Avenue
E/W: Baseline Road
Weather: Sunny

File Name : RNCMIBAAM
Site Code : 9150075
Start Date : 6/9/2009
Page No : 2

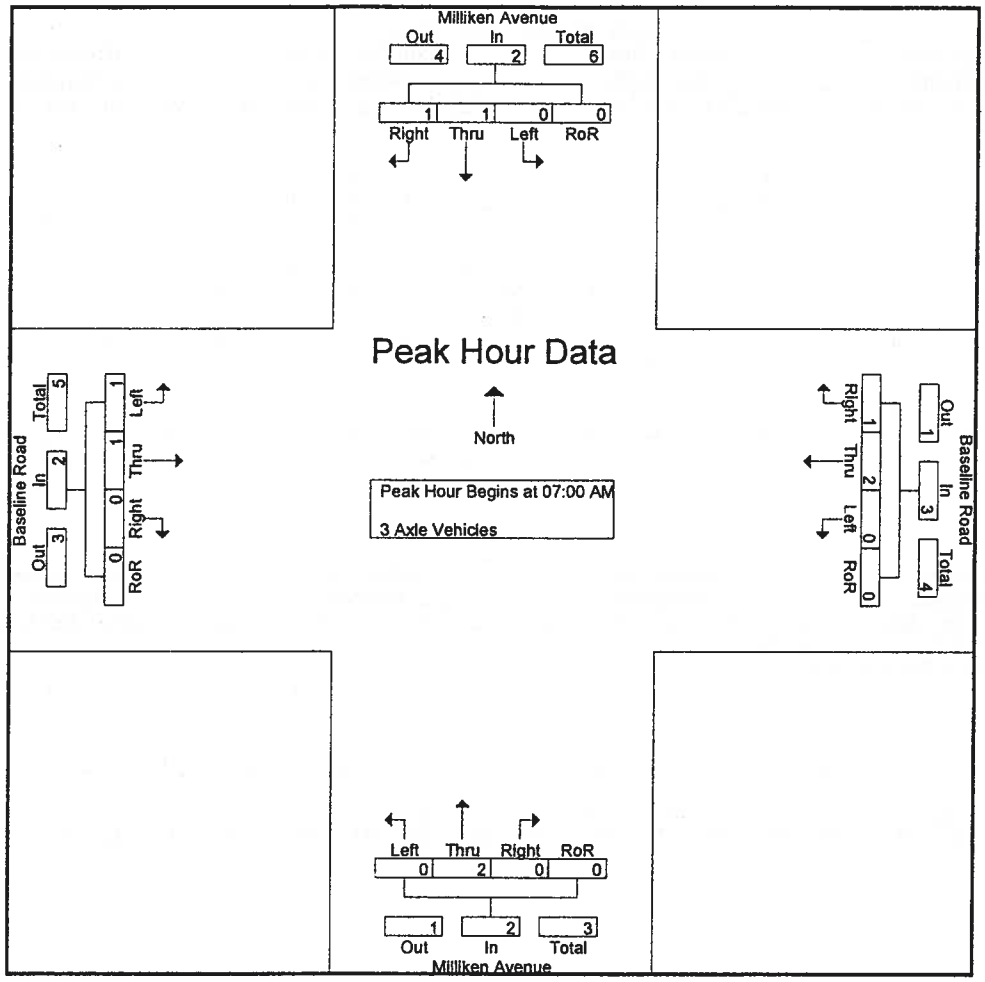

Peak Hour Analysis From 07:00 AM to 07:45 AM - Peak 1 of 1

Peak Hour for Each Approach Begins at:

	07:00 AM					07:00 AM					07:00 AM					07:00 AM				
+0 mins.	0	1	0	0	1	0	0	0	0	0	0	1	0	0	1	1	0	0	0	1
+15 mins.	0	0	0	0	0	0	1	0	0	1	0	1	0	0	1	0	1	0	0	1
+30 mins.	0	0	0	0	0	0	0	1	0	1	0	0	0	0	0	0	0	0	0	0
+45 mins.	0	0	1	0	1	0	1	0	0	1	0	0	0	0	0	0	0	0	0	0
Total Volume	0	1	1	0	2	0	2	1	0	3	0	2	0	0	2	1	1	0	0	2
% App. Total	0	50	50	0		0	66.7	33.3	0		0	100	0	0		50	50	0	0	
PHF	.000	.250	.250	.000	.500	.000	.500	.250	.000	.750	.000	.500	.000	.000	.500	.250	.250	.000	.000	.500

Counts Unlimited Inc.
25286 Jaclyn Avenue
Moreno Valley, CA 92557
951-485-7934

City of Rancho Cucamonga
N/S: Milliken Avenue
E/W: Baseline Road
Weather: Sunny

File Name : RNCMIBAAM
Site Code : 9150075
Start Date : 6/9/2009
Page No : 1

Groups Printed- 4+ Axle Trucks

	Milliken Avenue Southbound					Baseline Road Westbound					Milliken Avenue Northbound					Baseline Road Eastbound					
Start Time	Left	Thru	Right	RoR	App. Total	Left	Thru	Right	RoR	App. Total	Left	Thru	Right	RoR	App. Total	Left	Thru	Right	RoR	App. Total	Int. Total
07:00 AM	0	2	0	0	2	0	0	0	0	0	0	2	1	0	3	0	0	0	0	0	5
07:15 AM	0	2	0	0	2	0	0	0	0	0	0	1	0	0	1	0	1	0	0	1	4
07:30 AM	1	1	0	0	2	0	0	0	0	0	0	1	1	0	2	0	0	1	0	1	5
07:45 AM	0	1	1	0	2	0	0	0	0	0	0	2	0	0	2	0	2	0	0	2	6
Total	1	6	1	0	8	0	0	0	0	0	0	6	2	0	8	0	3	1	0	4	20
08:00 AM	0	0	0	0	0	0	0	0	1	1	0	0	0	0	0	1	0	0	0	1	2
08:15 AM	0	0	0	0	0	0	0	0	0	0	0	2	0	0	2	0	0	0	0	0	2
08:30 AM	0	1	0	0	1	2	0	0	0	2	0	2	0	0	2	0	2	0	0	2	7
08:45 AM	0	1	0	0	1	1	0	0	0	1	0	1	0	0	1	0	0	0	0	0	3
Total	0	2	0	0	2	3	0	0	1	4	0	5	0	0	5	1	2	0	0	3	14
Grand Total	1	8	1	0	10	3	0	0	1	4	0	11	2	0	13	1	5	1	0	7	34
Apprch %	10	80	10	0		75	0	0	25		0	84.6	15.4	0		14.3	71.4	14.3	0		
Total %	2.9	23.5	2.9	0	29.4	8.8	0	0	2.9	11.8	0	32.4	5.9	0	38.2	2.9	14.7	2.9	0	20.6	

	Milliken Avenue Southbound					Baseline Road Westbound					Milliken Avenue Northbound					Baseline Road Eastbound					
Start Time	Left	Thru	Right	RoR	App. Total		Thru	Right	RoR	App. Total		Thru	Right	RoR	App. Total		Thru	Right	RoR	App. Total	Int. Total
Peak Hour Analysis From 07:00 AM to 07:45 AM - Peak 1 of 1																					
Peak Hour for Entire Intersection Begins at 07:00 AM																					
07:00 AM	0	2	0	0	2	0	0	0	0	0	0	2	1	0	3	0	0	0	0	0	5
07:15 AM	0	2	0	0	2	0	0	0	0	0	0	1	0	0	1	0	1	0	0	1	4
07:30 AM	1	1	0	0	2	0	0	0	0	0	0	1	1	0	2	0	0	1	0	1	5
07:45 AM	0	1	1	0	2	0	0	0	0	0	0	2	0	0	2	0	2	0	0	2	6
Total Volume	1	6	1	0	8	0	0	0	0	0	0	6	2	0	8	0	3	1	0	4	20
% App. Total	12.5	75	12.5	0		0	0	0	0		0	75	25	0		0	75	25	0		
PHF	.250	.750	.250	.000	1.000	.000	.000	.000	.000	.000	.000	.750	.500	.000	.667	.000	.375	.250	.000	.500	.833

Counts Unlimited Inc.
25286 Jaclyn Avenue
Moreno Valley, CA 92557
951-485-7934

City of Rancho Cucamonga
N/S: Milliken Avenue
E/W: Baseline Road
Weather: Sunny

File Name : RNCMIBAAM
Site Code : 9150075
Start Date : 6/9/2009
Page No : 2

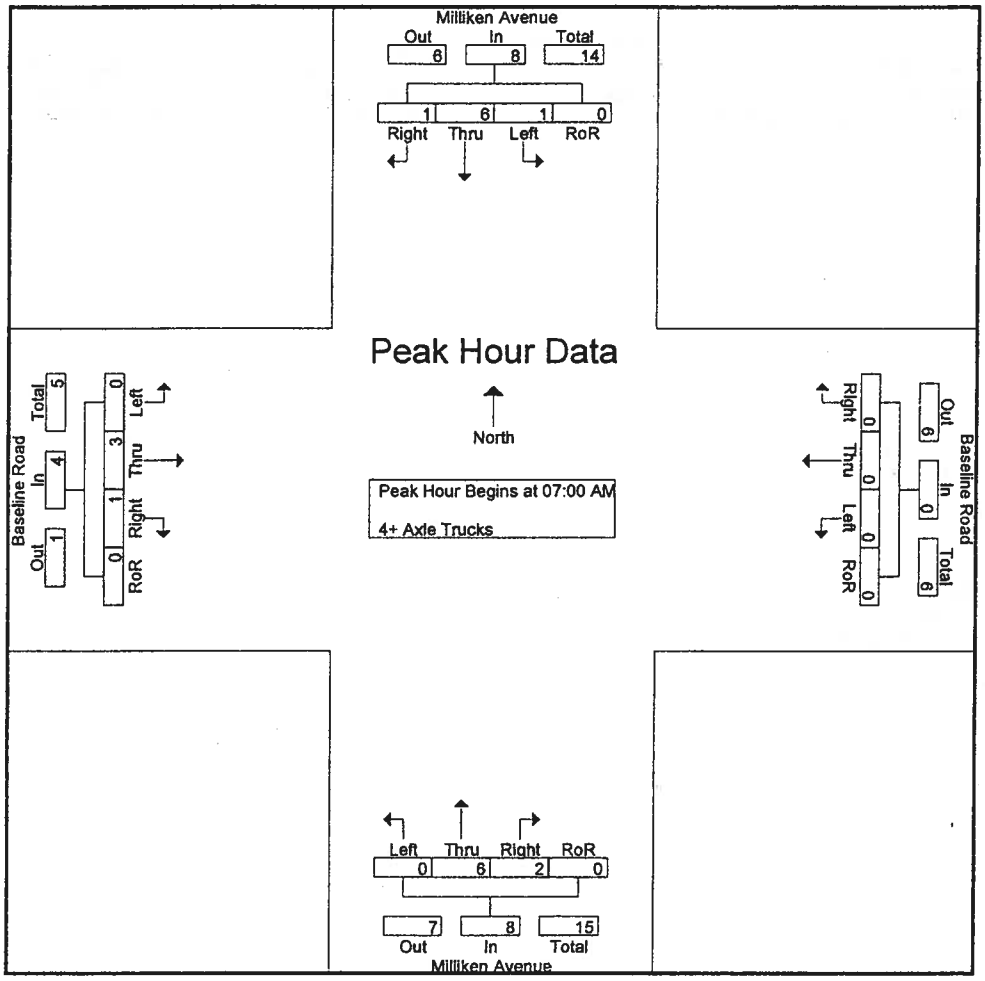

Peak Hour Analysis From 07:00 AM to 07:45 AM - Peak 1 of 1

Peak Hour for Each Approach Begins at:

	07:00 AM					07:00 AM					07:00 AM					07:00 AM				
+0 mins.	0	2	0	0	2	0	0	0	0	0	0	2	1	0	3	0	0	0	0	0
+15 mins.	0	2	0	0	2	0	0	0	0	0	0	1	0	0	1	0	1	0	0	1
+30 mins.	1	1	0	0	2	0	0	0	0	0	0	1	1	0	2	0	0	1	0	1
+45 mins.	0	1	1	0	2	0	0	0	0	0	0	2	0	0	2	0	2	0	0	2
Total Volume	1	6	1	0	8	0	0	0	0	0	0	6	2	0	8	0	3	1	0	4
% App. Total	12.5	75	12.5	0		0	0	0	0		0	75	25	0		0	75	25	0	
PHF	.250	.750	.250	.000	1.000	.000	.000	.000	.000	.000	.000	.750	.500	.000	.667	.000	.375	.250	.000	.500

Counts Unlimited Inc.
25286 Jaclyn Avenue
Moreno Valley, CA 92557
951-485-7934

City of Rancho Cucamonga
N/S: Milliken Avenue
E/W: Baseline Road
Weather: Sunny

File Name : RNCMIBAPM
Site Code : 9150075
Start Date : 6/3/2009
Page No : 1

Groups Printed- Passenger Vehicles - Large 2 Axle Vehicles - 3 Axle Vehicles - 4+ Axle Trucks

	Milliken Avenue Southbound					Baseline Road Westbound					Milliken Avenue Northbound					Baseline Road Eastbound					
Start Time	Left	Thru	Right	RoR	App. Total	Left	Thru	Right	RoR	App. Total	Left	Thru	Right	RoR	App. Total	Left	Thru	Right	RoR	App. Total	Int. Total
04:00 PM	38	114	17	14	183	24	114	10	8	156	45	151	17	13	226	58	131	24	9	222	787
04:15 PM	35	151	9	21	216	40	92	17	7	156	52	202	14	9	277	42	99	13	3	157	806
04:30 PM	40	122	7	11	180	35	84	11	7	137	61	210	12	16	299	42	123	10	9	184	800
04:45 PM	48	142	12	11	213	35	105	10	4	154	74	216	10	18	318	51	145	14	11	221	906
Total	161	529	45	57	792	134	395	48	26	603	232	779	53	56	1120	193	498	61	32	784	3299
05:00 PM	53	126	11	10	200	27	93	14	8	142	72	259	20	21	372	42	147	15	12	216	930
05:15 PM	30	144	6	18	198	24	92	10	5	131	57	251	19	35	362	57	161	11	3	232	923
05:30 PM	40	107	20	23	190	36	61	11	4	112	57	220	17	29	323	64	133	6	6	209	834
05:45 PM	62	170	7	10	249	24	92	16	14	146	92	249	22	27	390	75	119	9	3	206	991
Total	185	547	44	61	837	111	338	51	31	531	278	979	78	112	1447	238	560	41	24	863	3678
Grand Total	346	1076	89	118	1629	245	733	99	57	1134	510	1758	131	168	2567	431	1058	102	56	1647	6977
Apprch %	21.2	66.1	5.5	7.2		21.6	64.6	8.7	5		19.9	68.5	5.1	6.5		26.2	64.2	6.2	3.4		
Total %	5	15.4	1.3	1.7	23.3	3.5	10.5	1.4	0.8	16.3	7.3	25.2	1.9	2.4	36.8	6.2	15.2	1.5	0.8	23.6	
Passenger Vehicles		1069										1743					1040				
% Passenger Vehicles	99.4	99.3	98.9	97.5	99.2	98.4	98.5	98	98.2	98.4	99.4	99.1	97.7	98.8	99.1	99.8	98.3	100	98.2	98.8	98.9
Large 2 Axle Vehicles																					
% Large 2 Axle Vehicles	0.6	0.3	1.1	2.5	0.6	0.8	1.2	1	1.8	1.1	0.4	0.4	0.8	1.2	0.5	0.2	1	0	1.8	0.8	0.7
3 Axle Vehicles	0	1	0	0	1	0	1	1	0	2	1	1	0	0	2	0	5	0	0	5	10
% 3 Axle Vehicles	0	0.1	0	0	0.1	0	0.1	1	0	0.2	0.2	0.1	0	0	0.1	0	0.5	0	0	0.3	0.1
4+ Axle Trucks	0	3	0	0	3	2	1	0	0	3	0	7	2	0	9	0	2	0	0	2	17
% 4+ Axle Trucks																					

	Milliken Avenue Southbound					Baseline Road Westbound					Milliken Avenue Northbound					Baseline Road Eastbound					
Start Time	Left	Thru	Right	RoR	App. Total	Left	Thru	Right	RoR	App. Total	Left	Thru	Right	RoR	App. Total	Left	Thru	Right	RoR	App. Total	Int. Total
Peak Hour Analysis From 04:00 PM to 05:45 PM - Peak 1 of 1																					
Peak Hour for Entire Intersection Begins at 05:00 PM																					
05:00 PM	53	126	11	10	200	27	**93**	14	8	142	72	**259**	20	21	372	42	147	15	**12**	216	930
05:15 PM	30	144	6	18	198	24	92	10	5	131	57	251	19	**35**	362	57	**161**	11	3	**232**	923
05:30 PM	40	107	**20**	**23**	190	**36**	61	11	4	112	57	220	17	29	323	64	133	6	6	209	834
05:45 PM	**62**	**170**	7	10	**249**	24	92	**16**	**14**	**146**	**92**	249	**22**	27	**390**	**75**	119	9	3	206	**991**
Total Volume	185	547	44	61	837	111	338	51	31	531	278	979	78	112	1447	238	560	41	24	863	3678
% App. Total	22.1	65.4	5.3	7.3		20.9	63.7	9.6	5.8		19.2	67.7	5.4	7.7		27.6	64.9	4.8	2.8		
PHF	.746	.804	.550	.663	.840	.771	.909	.797	.554	.909	.755	.945	.886	.800	.928	.793	.870	.683	.500	.930	.928

Counts Unlimited Inc.
25286 Jaclyn Avenue
Moreno Valley, CA 92557
951-485-7934

City of Rancho Cucamonga
N/S: Milliken Avenue
E/W: Baseline Road
Weather: Sunny

File Name : RNCMIBAPM
Site Code : 9150075
Start Date : 6/3/2009
Page No : 2

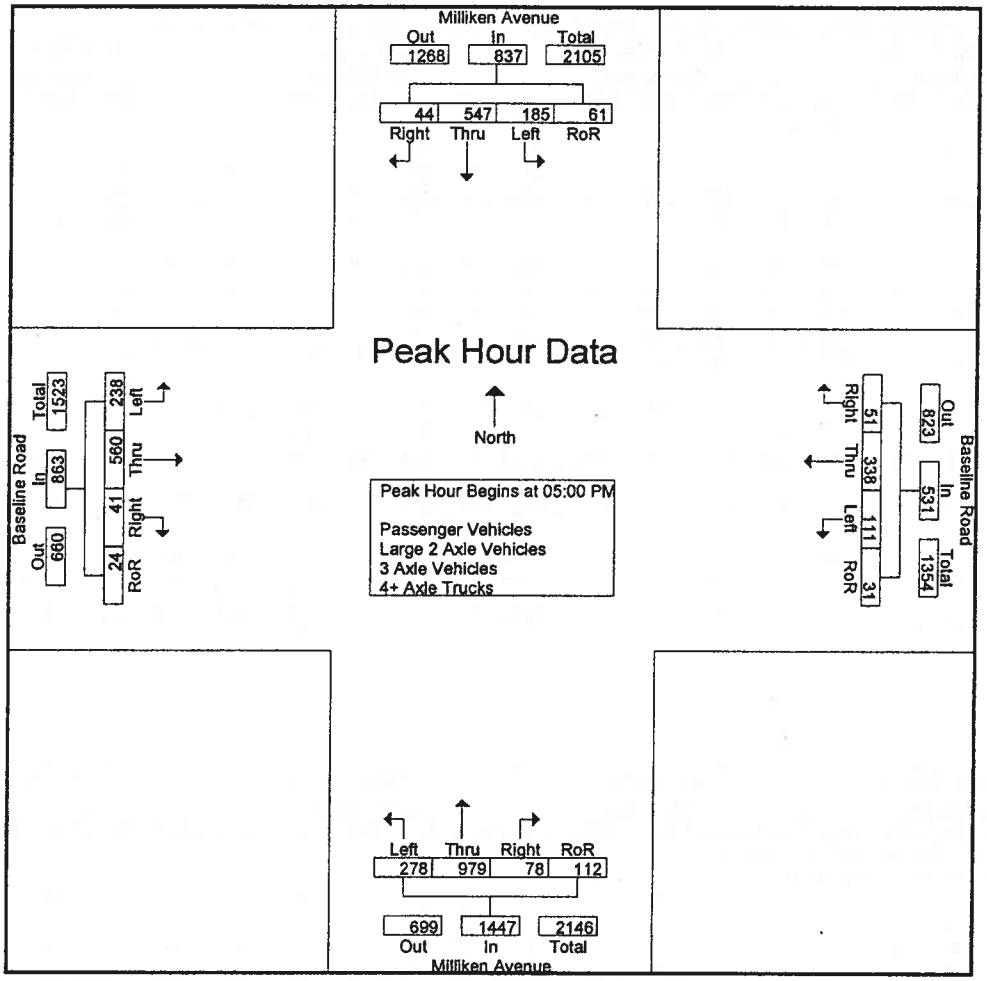

Peak Hour Analysis From 04:00 PM to 05:45 PM - Peak 1 of 1

Peak Hour for Each Approach Begins at:

	05:00 PM					04:00 PM					05:00 PM					04:45 PM				
+0 mins.	53	126	11	10	200	24	**114**	10	**8**	**156**	72	**259**	20	21	372	51	145	14	11	221
+15 mins.	30	144	6	18	198	**40**	92	**17**	7	156	57	251	19	**35**	362	42	**147**	**15**	**12**	216
+30 mins.	40	107	**20**	**23**	190	35	84	11	7	137	57	220	17	29	323	57	**161**	11	3	**232**
+45 mins.	**62**	**170**	7	10	**249**	35	105	10	4	154	**92**	249	**22**	**27**	**390**	**64**	133	6	6	209
Total Volume	185	547	44	61	837	134	395	48	26	603	278	979	78	112	1447	214	586	46	32	878
% App. Total	22.1	65.4	5.3	7.3		22.2	65.5	8	4.3		19.2	67.7	5.4	7.7		24.4	66.7	5.2	3.6	
PHF	.746	.804	.550	.663	.840	.838	.866	.706	.813	.966	.755	.945	.886	.800	.928	.836	.910	.767	.667	.946

Counts Unlimited Inc.
25286 Jaclyn Avenue
Moreno Valley, CA 92557
951-485-7934

City of Rancho Cucamonga
N/S: Milliken Avenue
E/W: Baseline Road
Weather: Sunny

File Name : RNCMIBAPM
Site Code : 9150075
Start Date : 6/3/2009
Page No : 1

Groups Printed- Passenger Vehicles

	Milliken Avenue Southbound					Baseline Road Westbound					Milliken Avenue Northbound					Baseline Road Eastbound					
Start Time	Left	Thru	Right	RoR	App. Total	Left	Thru	Right	RoR	App. Total	Left	Thru	Right	RoR	App. Total	Left	Thru	Right	RoR	App. Total	Int. Total
04:00 PM	38	114	16	14	182	22	112	10	8	152	45	151	16	13	225	57	128	24	9	218	777
04:15 PM	35	150	9	21	215	38	90	17	7	152	51	198	13	8	270	42	96	13	3	154	791
04:30 PM	40	121	7	11	179	35	84	11	7	137	61	207	12	16	296	42	119	10	9	180	792
04:45 PM	48	141	12	10	211	35	102	10	3	150	74	216	10	17	317	51	143	14	11	219	897
Total	161	526	44	56	787	130	388	48	25	591	231	772	51	54	1108	192	486	61	32	771	3257
05:00 PM	53	124	11	9	197	27	93	14	8	142	71	256	19	21	367	42	145	15	11	213	919
05:15 PM	29	144	6	18	197	24	92	8	5	129	57	249	19	35	360	57	160	11	3	231	917
05:30 PM	39	107	20	22	188	36	61	11	4	112	56	218	17	29	320	64	132	6	6	208	828
05:45 PM	62	168	7	10	247	24	88	16	14	142	92	248	22	27	389	75	117	9	3	204	982
Total	183	543	44	59	829	111	334	49	31	525	276	971	77	112	1436	238	554	41	23	856	3646
Grand Total	344	1069	88	115	1616	241	722	97	56	1116	507	1743	128	166	2544	430	1040	102	55	1627	6903
Apprch %	21.3	66.2	5.4	7.1		21.6	64.7	8.7	5		19.9	68.5	5	6.5		26.4	63.9	6.3	3.4		
Total %	5	15.5	1.3	1.7	23.4	3.5	10.5	1.4	0.8	16.2	7.3	25.2	1.9	2.4	36.9	6.2	15.1	1.5	0.8	23.6	

	Milliken Avenue Southbound					Baseline Road Westbound					Milliken Avenue Northbound					Baseline Road Eastbound					
Start Time	Left	Thru	Right	RoR	App. Total		Thru	Right	RoR	App. Total		Thru	Right	RoR	App. Total		Thru	Right	RoR	App. Total	Int. Total
Peak Hour Analysis From 05:00 PM to 05:45 PM - Peak 1 of 1																					
Peak Hour for Entire Intersection Begins at 05:00 PM																					
05:00 PM	53	124	11	9	197	27	93	14	8	142	71	256	19	21	367	42	145	15	11	213	919
05:15 PM	29	144	6	18	197	24	92	8	5	129	57	249	19	35	360	57	160	11	3	231	917
05:30 PM	39	107	20	22	188	36	61	11	4	112	56	218	17	29	320	64	132	6	6	208	828
05:45 PM	62	168	7	10	247	24	88	16	14	142	92	248	22	27	389	75	117	9	3	204	982
Total Volume	183	543	44	59	829	111	334	49	31	525	276	971	77	112	1436	238	554	41	23	856	3646
% App. Total	22.1	65.5	5.3	7.1		21.1	63.6	9.3	5.9		19.2	67.6	5.4	7.8		27.8	64.7	4.8	2.7		
PHF	.738	.808	.550	.670	.839	.771	.898	.766	.554	.924	.750	.948	.875	.800	.923	.793	.866	.683	.523	.926	.928

Counts Unlimited Inc.
25286 Jaclyn Avenue
Moreno Valley, CA 92557
951-485-7934

City of Rancho Cucamonga
N/S: Milliken Avenue
E/W: Baseline Road
Weather: Sunny

File Name : RNCMIBAPM
Site Code : 9150075
Start Date : 6/3/2009
Page No : 2

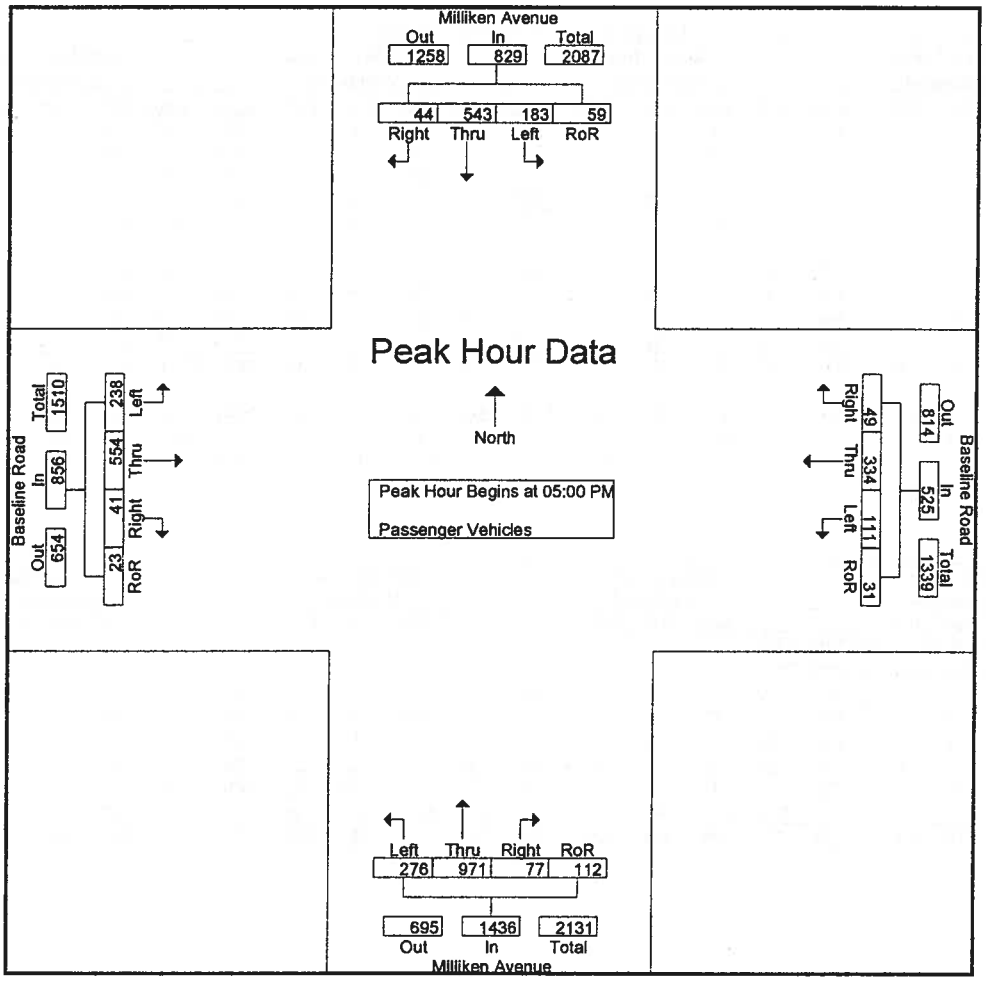

Peak Hour Analysis From 05:00 PM to 05:45 PM - Peak 1 of 1

Peak Hour for Each Approach Begins at:

	05:00 PM					05:00 PM					05:00 PM					05:00 PM				
+0 mins.	53	124	11	9	197	27	**93**	14	8	**142**	71	**256**	19	21	367	42	145	**15**	**11**	213
+15 mins.	29	144	6	18	197	24	92	8	5	129	57	249	19	**35**	360	57	**160**	11	3	**231**
+30 mins.	39	107	**20**	**22**	188	**36**	61	11	4	112	56	218	17	29	320	64	132	6	6	208
+45 mins.	**62**	**168**	7	10	**247**	24	88	**16**	**14**	142	**92**	248	**22**	27	**389**	**75**	117	9	3	204
Total Volume	183	543	44	59	829	111	334	49	31	525	276	971	77	112	1436	238	554	41	23	856
% App. Total	22.1	65.5	5.3	7.1		21.1	63.6	9.3	5.9		19.2	67.6	5.4	7.8		27.8	64.7	4.8	2.7	
PHF	.738	.808	.550	.670	.839	.771	.898	.766	.554	.924	.750	.948	.875	.800	.923	.793	.866	.683	.523	.926

Counts Unlimited Inc.
25286 Jaclyn Avenue
Moreno Valley, CA 92557
951-485-7934

City of Rancho Cucamonga
N/S: Milliken Avenue
E/W: Baseline Road
Weather: Sunny

File Name : RNCMIBAPM
Site Code : 9150075
Start Date : 6/3/2009
Page No : 1

Groups Printed- Large 2 Axle Vehicles

	Milliken Avenue Southbound					Baseline Road Westbound					Milliken Avenue Northbound					Baseline Road Eastbound					
Start Time	Left	Thru	Right	RoR	App. Total	Left	Thru	Right	RoR	App. Total	Left	Thru	Right	RoR	App. Total	Left	Thru	Right	RoR	App. Total	Int. Total
04:00 PM	0	0	1	0	1	2	2	0	0	4	0	0	1	0	1	1	1	0	0	2	8
04:15 PM	0	1	0	0	1	0	2	0	0	2	0	1	0	1	2	0	2	0	0	2	7
04:30 PM	0	1	0	0	1	0	0	0	0	0	0	1	0	0	1	0	2	0	0	2	4
04:45 PM	0	1	0	1	2	0	3	0	1	4	0	0	0	1	1	0	2	0	0	2	9
Total	0	3	1	1	5	2	7	0	1	10	0	2	1	2	5	1	7	0	0	8	28
05:00 PM	0	0	0	1	1	0	0	0	0	0	1	3	0	0	4	0	1	0	1	2	7
05:15 PM	1	0	0	0	1	0	0	1	0	1	0	1	0	0	1	0	1	0	0	1	4
05:30 PM	1	0	0	1	2	0	0	0	0	0	1	0	0	0	1	0	1	0	0	1	4
05:45 PM	0	0	0	0	0	0	2	0	0	2	0	1	0	0	1	0	1	0	0	1	4
Total	2	0	0	2	4	0	2	1	0	3	2	5	0	0	7	0	4	0	1	5	19
Grand Total	2	3	1	3	9	2	9	1	1	13	2	7	1	2	12	1	11	0	1	13	47
Apprch %	22.2	33.3	11.1	33.3		15.4	69.2	7.7	7.7		16.7	58.3	8.3	16.7		7.7	84.6	0	7.7		
Total %	4.3	6.4	2.1	6.4	19.1	4.3	19.1	2.1	2.1	27.7	4.3	14.9	2.1	4.3	25.5	2.1	23.4	0	2.1	27.7	

	Milliken Avenue Southbound					Baseline Road Westbound					Milliken Avenue Northbound					Baseline Road Eastbound					
Start Time	Left	Thru	Right	RoR	App. Total		Thru	Right	RoR	App. Total		Thru	Right	RoR	App. Total		Thru	Right	RoR	App. Total	Int. Total
Peak Hour Analysis From 05:00 PM to 05:45 PM - Peak 1 of 1																					
Peak Hour for Entire Intersection Begins at 05:00 PM																					
05:00 PM	0	0	0	1	1	0	0	0	0	0	1	3	0	0	4	0	1	0	1	2	7
05:15 PM	1	0	0	0	1	0	0	1	0	1	0	1	0	0	1	0	1	0	0	1	4
05:30 PM	1	0	0	1	2	0	0	0	0	0	1	0	0	0	1	0	1	0	0	1	4
05:45 PM	0	0	0	0	0	0	2	0	0	2	0	1	0	0	1	0	1	0	0	1	4
Total Volume	2	0	0	2	4	0	2	1	0	3	2	5	0	0	7	0	4	0	1	5	19
% App. Total	50	0	0	50		0	66.7	33.3	0		28.6	71.4	0	0		0	80	0	20		
PHF	.500	.000	.000	.500	.500	.000	.250	.250	.000	.375	.500	.417	.000	.000	.438	.000	1.000	.000	.250	.625	.679

Counts Unlimited Inc.
25286 Jaclyn Avenue
Moreno Valley, CA 92557
951-485-7934

City of Rancho Cucamonga
N/S: Milliken Avenue
E/W: Baseline Road
Weather: Sunny

File Name : RNCMIBAPM
Site Code : 9150075
Start Date : 6/3/2009
Page No : 2

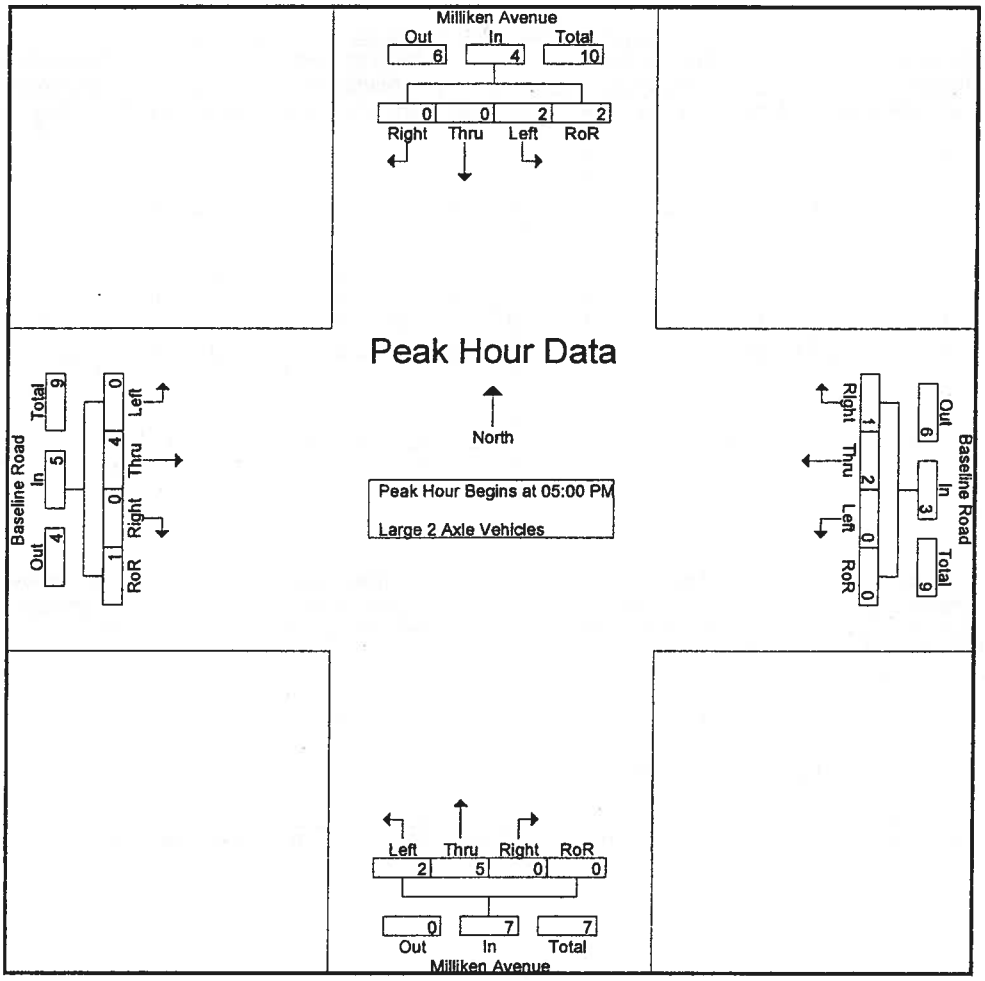

Peak Hour Analysis From 05:00 PM to 05:45 PM - Peak 1 of 1

Peak Hour for Each Approach Begins at:

	05:00 PM					05:00 PM					05:00 PM					05:00 PM				
+0 mins.	0	0	0	1	1	0	0	0	0	0	1	3	0	0	4	0	1	0	1	2
+15 mins.	1	0	0	0	1	0	0	1	0	1	0	1	0	0	1	0	1	0	0	1
+30 mins.	1	0	0	1	2	0	0	0	0	0	1	0	0	0	1	0	1	0	0	1
+45 mins.	0	0	0	0	0	0	2	0	0	2	0	1	0	0	1	0	1	0	0	1
Total Volume	2	0	0	2	4	0	2	1	0	3	2	5	0	0	7	0	4	0	1	5
% App. Total	50	0	0	50		0	66.7	33.3	0		28.6	71.4	0	0		0	80	0	20	
PHF	.500	.000	.000	.500	.500	.000	.250	.250	.000	.375	.500	.417	.000	.000	.438	.000	1.000	.000	.250	.625

Counts Unlimited Inc.
25286 Jaclyn Avenue
Moreno Valley, CA 92557
951-485-7934

City of Rancho Cucamonga
N/S: Milliken Avenue
E/W: Baseline Road
Weather: Sunny

File Name : RNCMIBAPM
Site Code : 9150075
Start Date : 6/3/2009
Page No : 1

Groups Printed- 3 Axle Vehicles

	Milliken Avenue Southbound					Baseline Road Westbound					Milliken Avenue Northbound					Baseline Road Eastbound					
Start Time	Left	Thru	Right	RoR	App. Total	Left	Thru	Right	RoR	App. Total	Left	Thru	Right	RoR	App. Total	Left	Thru	Right	RoR	App. Total	Int. Total
04:00 PM	0	0	0	0	0	0	0	0	0	0	0	0	0	0	0	0	2	0	0	2	2
04:15 PM	0	0	0	0	0	0	0	0	0	0	1	1	0	0	2	0	0	0	0	0	2
04:30 PM	0	0	0	0	0	0	0	0	0	0	0	0	0	0	0	0	2	0	0	2	2
04:45 PM	0	0	0	0	0	0	0	0	0	0	0	0	0	0	0	0	0	0	0	0	0
Total	0	0	0	0	0	0	0	0	0	0	1	1	0	0	2	0	4	0	0	4	6
05:00 PM	0	0	0	0	0	0	0	0	0	0	0	0	0	0	0	0	0	0	0	0	0
05:15 PM	0	0	0	0	0	0	0	1	0	1	0	0	0	0	0	0	0	0	0	0	1
05:30 PM	0	0	0	0	0	0	0	0	0	0	0	0	0	0	0	0	0	0	0	0	0
05:45 PM	0	1	0	0	1	0	1	0	0	1	0	0	0	0	0	0	1	0	0	1	3
Total	0	1	0	0	1	0	1	1	0	2	0	0	0	0	0	0	1	0	0	1	4
Grand Total	0	1	0	0	1	0	1	1	0	2	1	1	0	0	2	0	5	0	0	5	10
Apprch %	0	100	0	0		0	50	50	0		50	50	0	0		0	100	0	0		
Total %	0	10	0	0	10	0	10	10	0	20	10	10	0	0	20	0	50	0	0	50	

	Milliken Avenue Southbound					Baseline Road Westbound					Milliken Avenue Northbound					Baseline Road Eastbound					
Start Time	Left	Thru	Right	RoR	App. Total	Left	Thru	Right	RoR	App. Total	Left	Thru	Right	RoR	App. Total	Left	Thru	Right	RoR	App. Total	Int. Total
Peak Hour Analysis From 05:00 PM to 05:45 PM - Peak 1 of 1																					
Peak Hour for Entire Intersection Begins at 05:00 PM																					
05:00 PM	0	0	0	0	0	0	0	0	0	0	0	0	0	0	0	0	0	0	0	0	0
05:15 PM	0	0	0	0	0	0	0	1	0	1	0	0	0	0	0	0	0	0	0	0	1
05:30 PM	0	0	0	0	0	0	0	0	0	0	0	0	0	0	0	0	0	0	0	0	0
05:45 PM	0	1	0	0	1	0	1	0	0	1	0	0	0	0	0	0	1	0	0	1	3
Total Volume	0	1	0	0	1	0	1	1	0	2	0	0	0	0	0	0	1	0	0	1	4
% App. Total	0	100	0	0		0	50	50	0		0	0	0	0		0	100	0	0		
PHF	.000	.250	.000	.000	.250	.000	.250	.250	.000	.500	.000	.000	.000	.000	.000	.000	.250	.000	.000	.250	.333

Counts Unlimited Inc.
25286 Jaclyn Avenue
Moreno Valley, CA 92557
951-485-7934

City of Rancho Cucamonga
N/S: Milliken Avenue
E/W: Baseline Road
Weather: Sunny

File Name : RNCMIBAPM
Site Code : 9150075
Start Date : 6/3/2009
Page No : 2

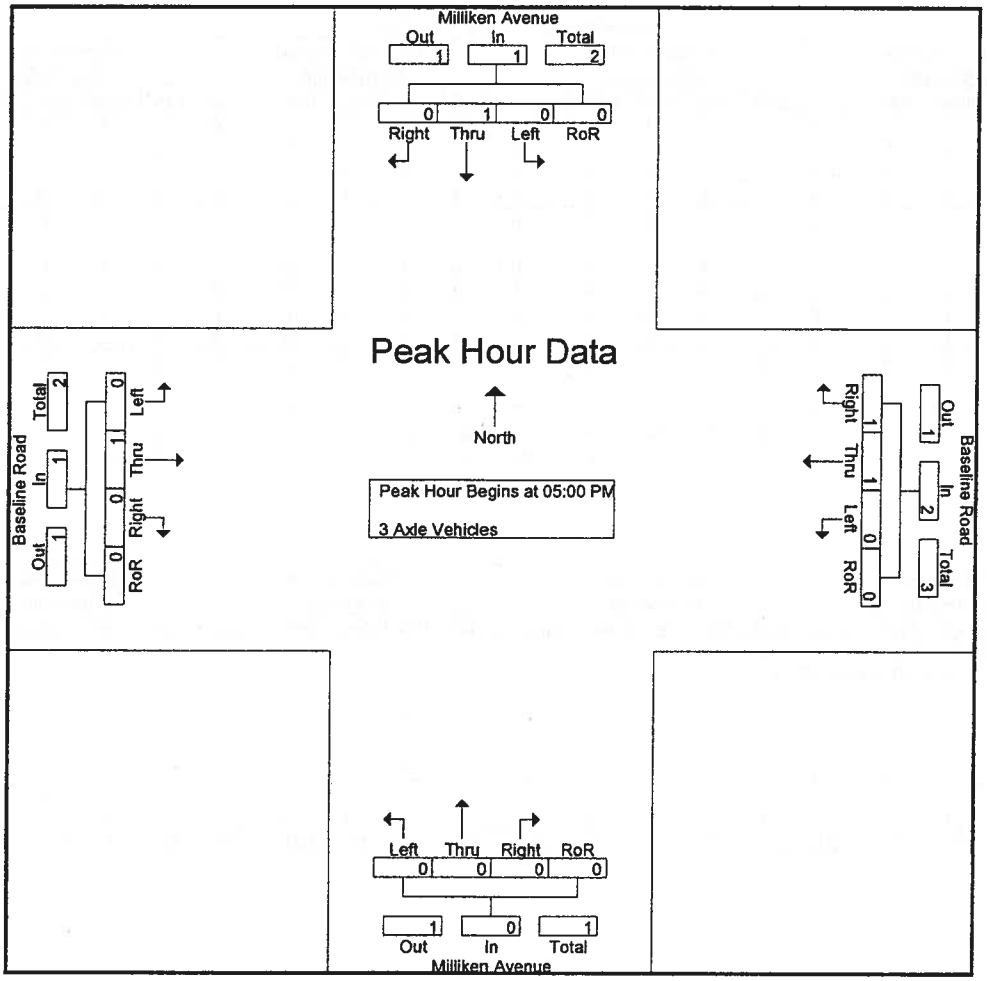

Peak Hour Analysis From 05:00 PM to 05:45 PM - Peak 1 of 1

Peak Hour for Each Approach Begins at:

	05:00 PM					05:00 PM					05:00 PM					05:00 PM				
+0 mins.	0	0	0	0	0	0	0	0	0	0	0	0	0	0	0	0	0	0	0	0
+15 mins.	0	0	0	0	0	0	0	1	0	1	0	0	0	0	0	0	0	0	0	0
+30 mins.	0	0	0	0	0	0	0	0	0	0	0	0	0	0	0	0	0	0	0	0
+45 mins.	0	1	0	0	1	0	1	0	0	1	0	0	0	0	0	0	1	0	0	1
Total Volume	0	1	0	0	1	0	1	1	0	2	0	0	0	0	0	0	1	0	0	1
% App. Total	0	100	0	0		0	50	50	0		0	0	0	0		0	100	0	0	
PHF	.000	.250	.000	.000	.250	.000	.250	.250	.000	.500	.000	.000	.000	.000	.000	.000	.250	.000	.000	.250

Counts Unlimited Inc.
25286 Jaclyn Avenue
Moreno Valley, CA 92557
951-485-7934

City of Rancho Cucamonga
N/S: Milliken Avenue
E/W: Baseline Road
Weather: Sunny

File Name : RNCMIBAPM
Site Code : 9150075
Start Date : 6/3/2009
Page No : 1

Groups Printed- 4+ Axle Trucks

	Milliken Avenue Southbound					Bascline Road Westbound					Milliken Avenue Northbound					Baseline Road Eastbound					
Start Time	Left	Thru	Right	RoR	App. Total	Left	Thru	Right	RoR	App. Total	Left	Thru	Right	RoR	App. Total	Left	Thru	Right	RoR	App. Total	Int. Total
04:00 PM	0	0	0	0	0	0	0	0	0	0	0	0	0	0	0	0	0	0	0	0	0
04:15 PM	0	0	0	0	0	2	0	0	0	2	0	2	1	0	3	0	1	0	0	1	6
04:30 PM	0	0	0	0	0	0	0	0	0	0	0	2	0	0	2	0	0	0	0	0	2
04:45 PM	0	0	0	0	0	0	0	0	0	0	0	0	0	0	0	0	0	0	0	0	0
Total	0	0	0	0	0	2	0	0	0	2	0	4	1	0	5	0	1	0	0	1	8
05:00 PM	0	2	0	0	2	0	0	0	0	0	0	0	1	0	1	0	1	0	0	1	4
05:15 PM	0	0	0	0	0	0	0	0	0	0	0	1	0	0	1	0	0	0	0	0	1
05:30 PM	0	0	0	0	0	0	0	0	0	0	0	2	0	0	2	0	0	0	0	0	2
05:45 PM	0	1	0	0	1	0	1	0	0	1	0	0	0	0	0	0	0	0	0	0	2
Total	0	3	0	0	3	0	1	0	0	1	0	3	1	0	4	0	1	0	0	1	9
Grand Total	0	3	0	0	3	2	1	0	0	3	0	7	2	0	9	0	2	0	0	2	17
Apprch %	0	100	0	0		66.7	33.3	0	0		0	77.8	22.2	0		0	100	0	0		
Total %	0	17.6	0	0	17.6	11.8	5.9	0	0	17.6	0	41.2	11.8	0	52.9	0	11.8	0	0	11.8	

	Milliken Avenue Southbound					Baseline Road Westbound					Milliken Avenue Northbound					Baseline Road Eastbound					
Start Time	Left	Thru	Right	RoR	App. Total		Thru	Right	RoR	App. Total		Thru	Right	RoR	App. Total		Thru	Right	RoR	App. Total	Int. Total
Peak Hour Analysis From 05:00 PM to 05:45 PM - Peak 1 of 1																					
Peak Hour for Entire Intersection Begins at 05:00 PM																					
05:00 PM	0	2	0	0	2	0	0	0	0	0	0	0	1	0	1	0	1	0	0	1	4
05:15 PM	0	0	0	0	0	0	0	0	0	0	0	1	0	0	1	0	0	0	0	0	1
05:30 PM	0	0	0	0	0	0	0	0	0	0	0	2	0	0	2	0	0	0	0	0	2
05:45 PM	0	1	0	0	1	0	1	0	0	1	0	0	0	0	0	0	0	0	0	0	2
Total Volume	0	3	0	0	3	0	1	0	0	1	0	3	1	0	4	0	1	0	0	1	9
% App. Total	0	100	0	0		0	100	0	0		0	75	25	0		0	100	0	0		
PHF	.000	.375	.000	.000	.375	.000	.250	.000	.000	.250	.000	.375	.250	.000	.500	.000	.250	.000	.000	.250	.563

Counts Unlimited Inc.
25286 Jaclyn Avenue
Moreno Valley, CA 92557
951-485-7934

City of Rancho Cucamonga
N/S: Milliken Avenue
E/W: Baseline Road
Weather: Sunny

File Name : RNCMIBAPM
Site Code : 9150075
Start Date : 6/3/2009
Page No : 2

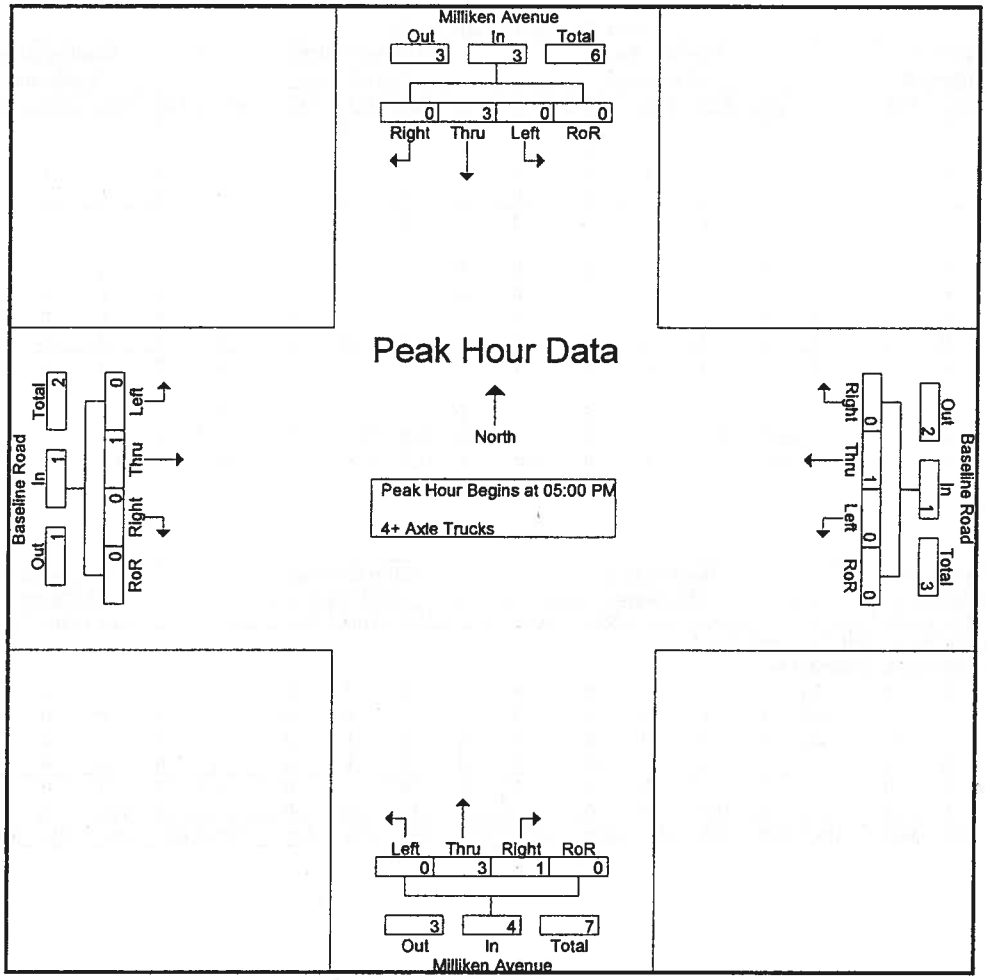

Peak Hour Analysis From 05:00 PM to 05:45 PM - Peak 1 of 1

Peak Hour for Each Approach Begins at:

	05:00 PM					05:00 PM					05:00 PM					05:00 PM				
+0 mins.	0	2	0	0	2	0	0	0	0	0	0	0	1	0	1	0	1	0	0	1
+15 mins.	0	0	0	0	0	0	0	0	0	0	0	1	0	0	1	0	0	0	0	0
+30 mins.	0	0	0	0	0	0	0	0	0	0	0	2	0	0	2	0	0	0	0	0
+45 mins.	0	1	0	0	1	0	1	0	0	1	0	0	0	0	0	0	0	0	0	0
Total Volume	0	3	0	0	3	0	1	0	0	1	0	3	1	0	4	0	1	0	0	1
% App. Total	0	100	0	0		0	100	0	0		0	75	25	0		0	100	0	0	
PHF	.000	.375	.000	.000	.375	.000	.250	.000	.000	.250	.000	.375	.250	.000	.500	.000	.250	.000	.000	.250

PASSENGER CAR EQUIVALENCY PEAK HOUR COUNT SUMMARY

INTERSECTION 16
Milliken Avenue (NS) / Foothill Boulevard / SR-66 (EW)

AM PEAK HOUR

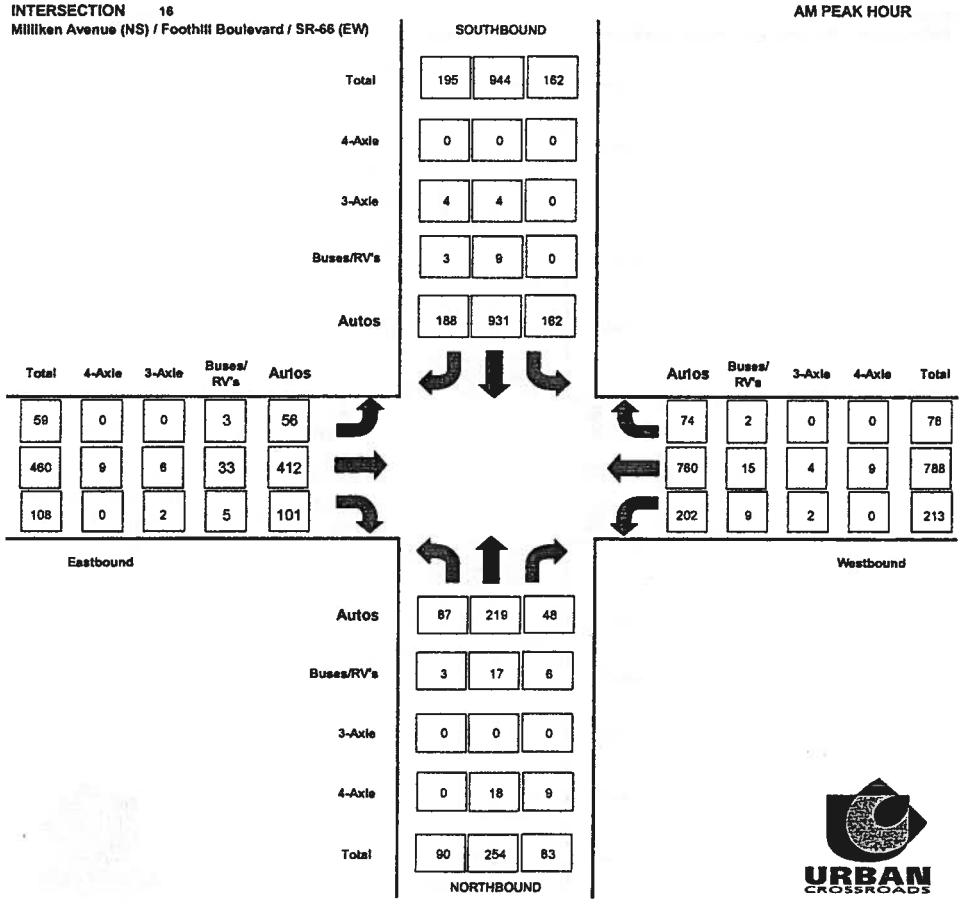

INTERSECTION 16
Milliken Avenue (NS) / Foothill Boulevard / SR-66 (EW)

PM PEAK HOUR

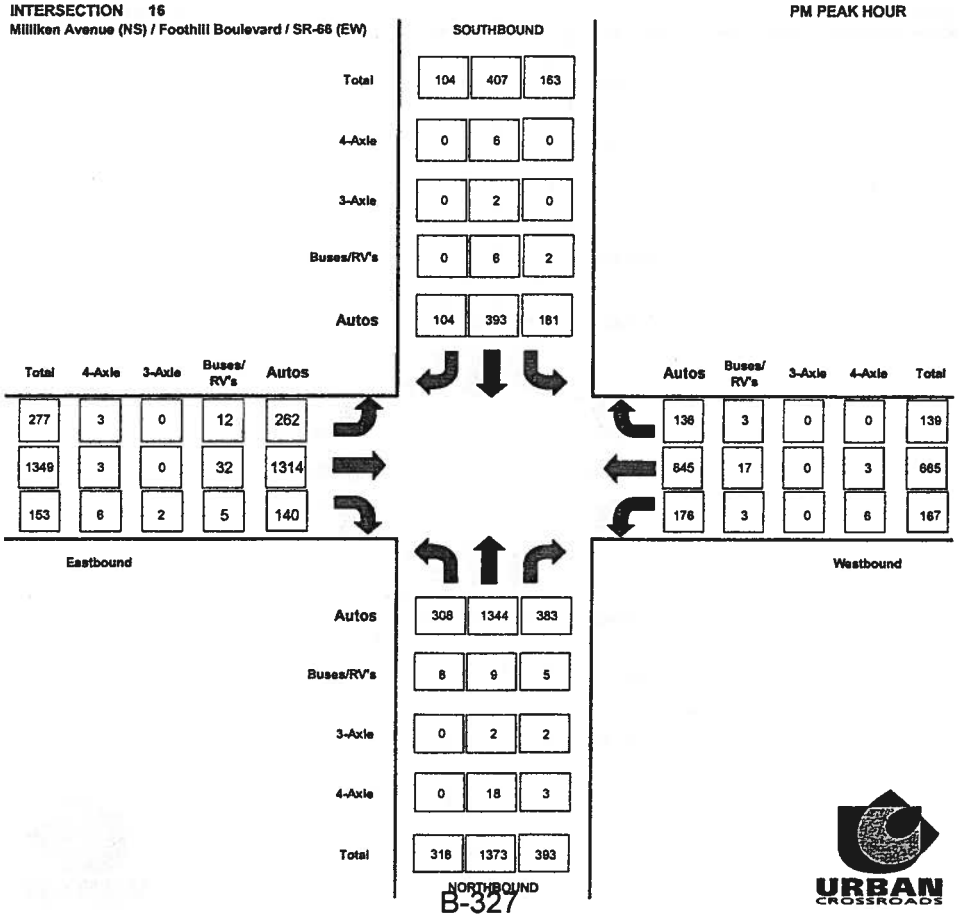

RAW PEAK HOUR COUNT SUMMARY

INTERSECTION 16
Milliken Avenue (NS) / Foothill Boulevard / SR-66 (EW)

AM PEAK HOUR

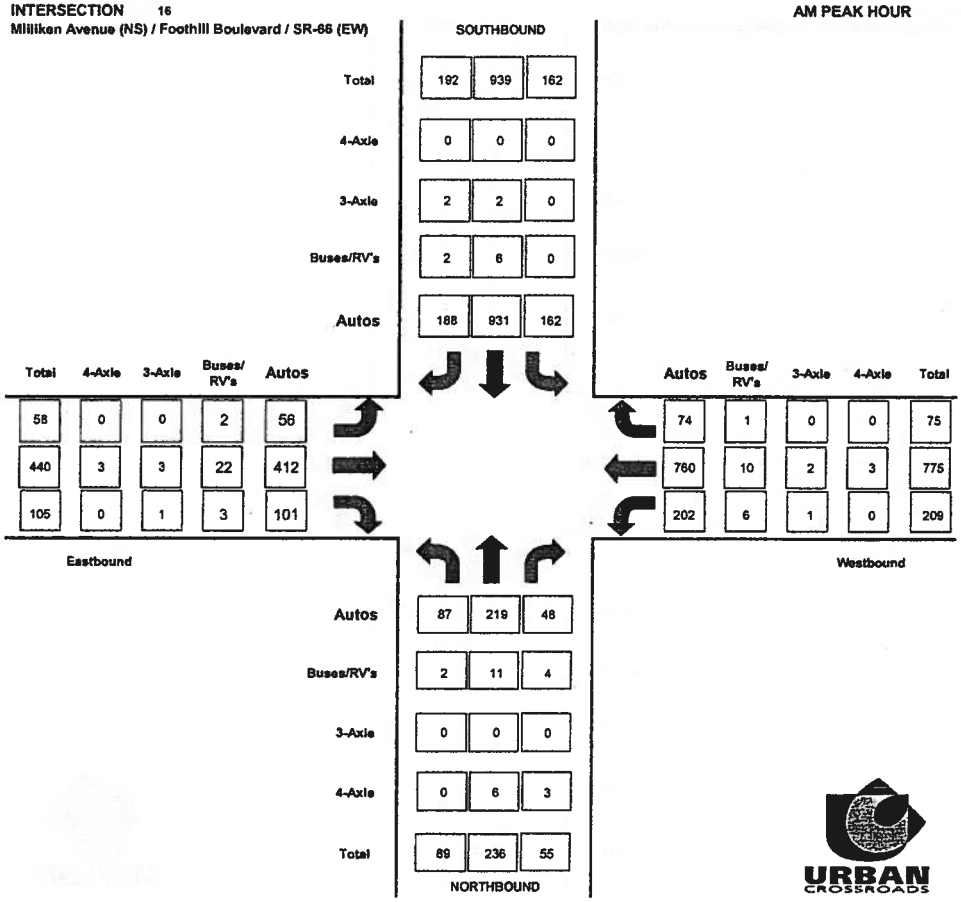

INTERSECTION 16
Milliken Avenue (NS) / Foothill Boulevard / SR-66 (EW)

PM PEAK HOUR

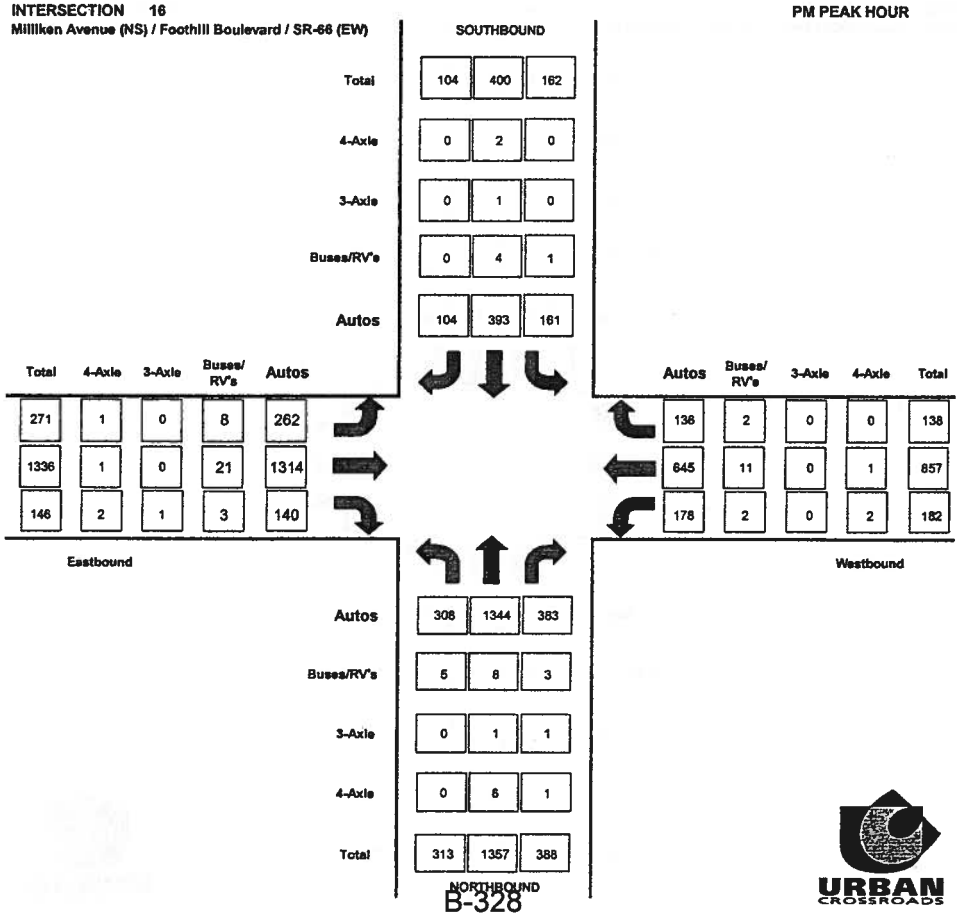

Counts Unlimited Inc.
25286 Jaclyn Avenue
Moreno Valley, CA 92557
951-485-7934

City of Rancho Cucamonga
N/S: Milliken Avenue
E/W: Foothill Boulevard
Weather: Sunny

File Name : RNCMIFOAM
Site Code : 91501963
Start Date : 6/3/2009
Page No : 1

Groups Printed- Passenger Vehicles - Large 2 Axle Vehicles - 3 Axle Vehicles - 4+ Axle Trucks

	Milliken Avenue Southbound					Foothill Boulevard Westbound					Milliken Avenue Northbound					Foothill Boulevard Eastbound					
Start Time	Left	Thru	Right	RoR	App. Total	Left	Thru	Right	RoR	App. Total	Left	Thru	Right	RoR	App. Total	Left	Thru	Right	RoR	App. Total	Int. Total
07:00 AM	29	181	15	18	243	28	116	2	7	153	15	52	8	7	82	7	65	2	7	81	559
07:15 AM	27	185	18	21	251	42	158	3	10	213	6	54	3	5	68	11	79	7	17	114	646
07:30 AM	38	245	31	21	335	79	221	25	0	325	14	56	9	9	88	9	105	12	13	139	887
07:45 AM	50	298	26	24	398	59	223	18	0	300	16	61	10	3	90	21	106	11	13	151	939
Total	144	909	90	84	1227	208	718	48	17	991	51	223	30	24	328	48	355	32	50	485	3031
08:00 AM	40	221	19	21	301	43	181	20	0	244	28	70	7	3	108	11	107	10	19	147	800
08:15 AM	34	175	23	27	259	28	150	9	3	190	31	49	9	5	94	17	122	16	11	166	709
08:30 AM	41	147	18	27	233	28	118	5	4	155	35	70	9	13	127	17	103	20	9	149	664
08:45 AM	29	138	15	22	204	34	146	10	14	204	33	57	16	4	110	18	142	1	16	177	695
Total	144	681	75	97	997	133	595	44	21	793	127	246	41	25	439	63	474	47	55	639	2868
Grand Total	288	1590	165	181	2224	341	1313	92	38	1784	178	469	71	49	767	111	829	79	105	1124	5899
Apprch %	12.9	71.5	7.4	8.1		19.1	73.6	5.2	2.1		23.2	61.1	9.3	6.4		9.9	73.8	7	9.3		
Total %	4.9	27	2.8	3.1	37.7	5.8	22.3	1.6	0.6	30.2	3	8	1.2	0.8	13	1.9	14.1	1.3	1.8	19.1	
Passenger Vehicles		1564					1274														
% Passenger Vehicles	99.3	98.4	95.2	99.4	98.3	93.8	97	95.7	97.4	96.4	94.4	93.4	85.9	81.6	92.2	94.6	93.6	89.9	98.1	93.9	96.1
Large 2 Axle Vehicles																					
% Large 2 Axle Vehicles	0.3	1.1	3	0.6	1.1	3.5	2.2	4.3	0	2.5	3.9	4.5	9.9	14.3	5.5	5.4	4.9	5.1	1	4.6	2.8
3 Axle Vehicles																					
% 3 Axle Vehicles	0	0.3	1.8	0	0.3	0.3	0.2	0	0	0.2	0	0.4	0	0	0.3	0	0.5	3.8	0	0.6	0.3
4+ Axle Trucks	1	4	0	0	5	8	7	0	1	16	3	8	3	2	16	0	8	1	1	10	47
% 4+ Axle Trucks																					

	Milliken Avenue Southbound					Foothill Boulevard Westbound					Milliken Avenue Northbound					Foothill Boulevard Eastbound					
Start Time	Left	Thru	Right	RoR	App. Total	Left	Thru	Right	RoR	App. Total	Left	Thru	Right	RoR	App. Total	Left	Thru	Right	RoR	App. Total	Int. Total
Peak Hour Analysis From 07:00 AM to 08:45 AM - Peak 1 of 1																					
Peak Hour for Entire Intersection Begins at 07:30 AM																					
07:30 AM	38	245	**31**	21	335	**79**	221	**25**	0	**325**	14	56	9	**9**	88	9	105	12	13	139	887
07:45 AM	**50**	**298**	26	24	**398**	59	**223**	18	0	300	16	61	**10**	3	90	**21**	106	11	13	151	**939**
08:00 AM	40	221	19	21	301	43	181	20	0	244	28	**70**	7	3	**108**	11	107	10	**19**	147	800
08:15 AM	34	175	23	**27**	259	28	150	9	**3**	190	**31**	49	9	5	94	17	**122**	**16**	11	**166**	709
Total Volume	162	939	99	93	1293	209	775	72	3	1059	89	236	35	20	380	58	440	49	56	603	3335
% App. Total	12.5	72.6	7.7	7.2		19.7	73.2	6.8	0.3		23.4	62.1	9.2	5.3		9.6	73	8.1	9.3		
PHF	.810	.788	.798	.861	.812	.661	.869	.720	.250	.815	.718	.843	.875	.556	.880	.690	.902	.766	.737	.908	.888

Counts Unlimited Inc.
25286 Jaclyn Avenue
Moreno Valley, CA 92557
951-485-7934

City of Rancho Cucamonga
N/S: Milliken Avenue
E/W: Foothill Boulevard
Weather: Sunny

File Name : RNCMIFOAM
Site Code : 91501963
Start Date : 6/3/2009
Page No : 2

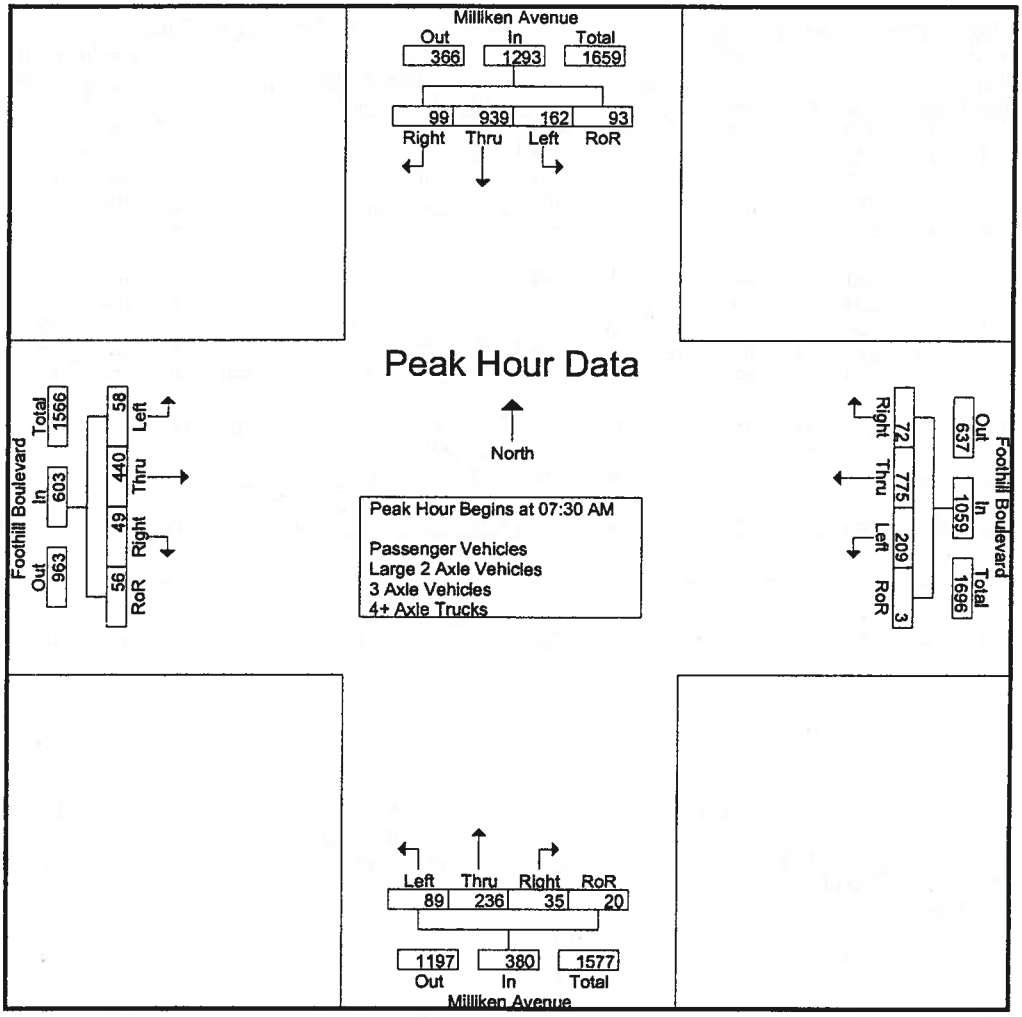

Peak Hour Analysis From 07:00 AM to 08:45 AM - Peak 1 of 1

Peak Hour for Each Approach Begins at:

	07:30 AM					07:15 AM					08:00 AM					08:00 AM				
+0 mins.	38	245	31	21	335	42	158	3	10	213	28	70	7	3	108	11	107	10	19	147
+15 mins.	50	298	26	24	398	79	221	25	0	325	31	49	9	5	94	17	122	16	11	166
+30 mins.	40	221	19	21	301	59	223	18	0	300	35	70	9	13	127	17	103	20	9	149
+45 mins.	34	175	23	27	259	43	181	20	0	244	33	57	16	4	110	18	142	1	16	177
Total Volume	162	939	99	93	1293	223	783	66	10	1082	127	246	41	25	439	63	474	47	55	639
% App. Total	12.5	72.6	7.7	7.2		20.6	72.4	6.1	0.9		28.9	56	9.3	5.7		9.9	74.2	7.4	8.6	
PHF	.810	.788	.798	.861	.812	.706	.878	.660	.250	.832	.907	.879	.641	.481	.864	.875	.835	.588	.724	.903

Counts Unlimited Inc.
25286 Jaclyn Avenue
Moreno Valley, CA 92557
951-485-7934

City of Rancho Cucamonga
N/S: Milliken Avenue
E/W: Foothill Boulevard
Weather: Sunny

File Name : RNCMIFOAM
Site Code : 91501963
Start Date : 6/3/2009
Page No : 1

Groups Printed- Passenger Vehicles

	Milliken Avenue Southbound					Foothill Boulevard Westbound					Milliken Avenue Northbound					Foothill Boulevard Eastbound					
Start Time	Left	Thru	Right	RoR	App. Total	Left	Thru	Right	RoR	App. Total	Left	Thru	Right	RoR	App. Total	Left	Thru	Right	RoR	App. Total	Int. Total
07:00 AM	29	178	13	18	238	27	111	2	6	146	13	49	7	6	75	5	62	1	7	75	534
07:15 AM	27	183	17	21	248	38	152	2	10	202	6	51	2	4	63	10	72	7	17	106	619
07:30 AM	38	243	28	21	330	76	219	25	0	320	14	51	9	7	81	8	99	11	13	131	862
07:45 AM	50	296	26	24	396	57	220	17	0	294	16	59	9	3	87	21	103	10	13	147	924
Total	144	900	84	84	1212	198	702	46	16	962	49	210	27	20	306	44	336	29	50	459	2939
08:00 AM	40	219	19	21	299	42	178	20	0	240	26	66	5	2	99	11	99	10	19	139	777
08:15 AM	34	173	22	27	256	27	143	9	3	182	31	43	9	4	87	16	111	14	11	152	677
08:30 AM	40	140	18	27	225	22	115	4	4	145	32	66	6	10	114	17	99	18	9	143	627
08:45 AM	28	132	14	21	195	31	136	9	14	190	30	53	14	4	101	17	131	0	14	162	648
Total	142	664	73	96	975	122	572	42	21	757	119	228	34	20	401	61	440	42	53	596	2729
Grand Total	286	1564	157	180	2187	320	1274	88	37	1719	168	438	61	40	707	105	776	71	103	1055	5668
Apprch %	13.1	71.5	7.2	8.2		18.6	74.1	5.1	2.2		23.8	62	8.6	5.7		10	73.6	6.7	9.8		
Total %	5	27.6	2.8	3.2	38.6	5.6	22.5	1.6	0.7	30.3	3	7.7	1.1	0.7	12.5	1.9	13.7	1.3	1.8	18.6	

	Milliken Avenue Southbound					Foothill Boulevard Westbound					Milliken Avenue Northbound					Foothill Boulevard Eastbound					
Start Time	Left	Thru	Right	RoR	App. Total		Thru	Right	RoR	App. Total		Thru	Right	RoR	App. Total		Thru	Right	RoR	App. Total	Int. Total
Peak Hour Analysis From 07:30 AM to 08:15 AM - Peak 1 of 1																					
Peak Hour for Entire Intersection Begins at 07:30 AM																					
07:30 AM	38	243	**28**	21	330	**76**	219	**25**	0	**320**	14	51	**9**	7	81	8	99	11	13	131	862
07:45 AM	**50**	**296**	26	24	**396**	57	**220**	17	0	294	16	59	9	3	87	**21**	103	10	13	147	**924**
08:00 AM	40	219	19	21	299	42	178	20	0	240	26	**66**	5	2	**99**	11	99	10	**19**	139	777
08:15 AM	34	173	22	**27**	256	27	143	9	**3**	182	**31**	43	9	4	87	16	**111**	**14**	11	**152**	677
Total Volume	162	931	95	93	1281	202	760	71	3	1036	87	219	32	16	354	56	412	45	56	569	3240
% App. Total	12.6	72.7	7.4	7.3		19.5	73.4	6.9	0.3		24.6	61.9	9	4.5		9.8	72.4	7.9	9.8		
PHF	.810	.786	.848	.861	.809	.664	.864	.710	.250	.809	.702	.830	.889	.571	.894	.667	.928	.804	.737	.936	.877

Counts Unlimited Inc.
25286 Jaclyn Avenue
Moreno Valley, CA 92557
951-485-7934

City of Rancho Cucamonga
N/S: Milliken Avenue
E/W: Foothill Boulevard
Weather: Sunny

File Name : RNCMIFOAM
Site Code : 91501963
Start Date : 6/3/2009
Page No : 2

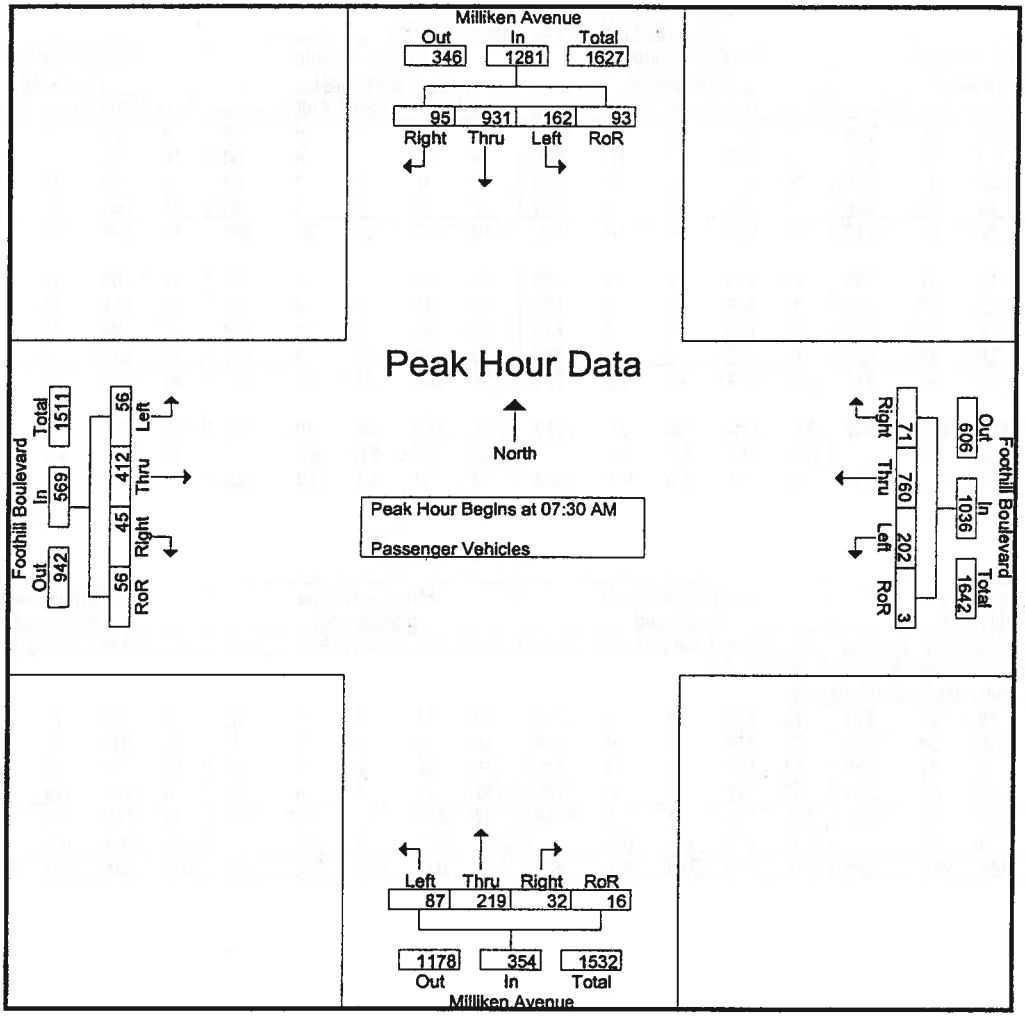

Peak Hour Analysis From 07:30 AM to 08:15 AM - Peak 1 of 1

Peak Hour for Each Approach Begins at:

	07:30 AM					07:30 AM					07:30 AM					07:30 AM				
+0 mins.	38	243	**28**	21	330	**76**	219	**25**	0	**320**	14	51	**9**	7	81	8	99	11	13	131
+15 mins.	**50**	**296**	26	24	**396**	57	**220**	17	0	294	16	59	**9**	3	87	**21**	103	10	13	147
+30 mins.	40	219	19	21	299	42	178	20	0	240	26	**66**	5	2	**99**	11	99	10	**19**	139
+45 mins.	34	173	22	**27**	256	27	143	9	**3**	182	**31**	43	**9**	4	87	16	**111**	**14**	11	**152**
Total Volume	162	931	95	93	1281	202	760	71	3	1036	87	219	32	16	354	56	412	45	56	569
% App. Total	12.6	72.7	7.4	7.3		19.5	73.4	6.9	0.3		24.6	61.9	9	4.5		9.8	72.4	7.9	9.8	
PHF	.810	.786	.848	.861	.809	.664	.864	.710	.250	.809	.702	.830	.889	.571	.894	.667	.928	.804	.737	.936

Counts Unlimited Inc.
25286 Jaclyn Avenue
Moreno Valley, CA 92557
951-485-7934

City of Rancho Cucamonga
N/S: Milliken Avenue
E/W: Foothill Boulevard
Weather: Sunny

File Name : RNCMIFOAM
Site Code : 91501963
Start Date : 6/3/2009
Page No : 1

Groups Printed- Large 2 Axle Vehicles

	Milliken Avenue Southbound					Foothill Boulevard Westbound					Milliken Avenue Northbound					Foothill Boulevard Eastbound					
Start Time	Left	Thru	Right	RoR	App. Total	Left	Thru	Right	RoR	App. Total	Left	Thru	Right	RoR	App. Total	Left	Thru	Right	RoR	App. Total	Int. Total
07:00 AM	0	1	1	0	2	1	1	0	0	2	1	2	1	1	5	2	3	0	0	5	14
07:15 AM	0	2	1	0	3	1	6	1	0	8	0	3	1	1	5	1	5	0	0	6	22
07:30 AM	0	2	1	0	3	3	1	0	0	4	0	3	0	0	3	1	4	1	0	6	16
07:45 AM	0	1	0	0	1	2	2	1	0	5	0	2	1	0	3	0	2	1	0	3	12
Total	0	6	3	0	9	7	10	2	0	19	1	10	3	2	16	4	14	2	0	20	64
08:00 AM	0	2	0	0	2	1	3	0	0	4	2	3	1	1	7	0	7	0	0	7	20
08:15 AM	0	1	1	0	2	0	4	0	0	4	0	3	0	1	4	1	9	1	0	11	21
08:30 AM	0	3	0	0	3	4	3	1	0	8	1	2	2	3	8	0	4	1	0	5	24
08:45 AM	1	6	1	1	9	0	9	1	0	10	3	3	1	0	7	1	7	0	1	9	35
Total	1	12	2	1	16	5	19	2	0	26	6	11	4	5	26	2	27	2	1	32	100
Grand Total	1	18	5	1	25	12	29	4	0	45	7	21	7	7	42	6	41	4	1	52	164
Apprch %	4	72	20	4		26.7	64.4	8.9	0		16.7	50	16.7	16.7		11.5	78.8	7.7	1.9		
Total %	0.6	11	3	0.6	15.2	7.3	17.7	2.4	0	27.4	4.3	12.8	4.3	4.3	25.6	3.7	25	2.4	0.6	31.7	

	Milliken Avenue Southbound					Foothill Boulevard Westbound					Milliken Avenue Northbound					Foothill Boulevard Eastbound					
Start Time	Left	Thru	Right	RoR	App. Total		Thru	Right	RoR	App. Total		Thru	Right	RoR	App. Total		Thru	Right	RoR	App. Total	Int. Total
Peak Hour Analysis From 07:30 AM to 08:15 AM - Peak 1 of 1																					
Peak Hour for Entire Intersection Begins at 07:30 AM																					
07:30 AM	0	2	1	0	3	3	1	0	0	4	0	3	0	0	3	1	4	1	0	6	16
07:45 AM	0	1	0	0	1	2	2	1	0	5	0	2	1	0	3	0	2	1	0	3	12
08:00 AM	0	2	0	0	2	1	3	0	0	4	2	3	1	1	7	0	7	0	0	7	20
08:15 AM	0	1	1	0	2	0	4	0	0	4	0	3	0	1	4	1	9	1	0	11	21
Total Volume	0	6	2	0	8	6	10	1	0	17	2	11	2	2	17	2	22	3	0	27	69
% App. Total	0	75	25	0		35.3	58.8	5.9	0		11.8	64.7	11.8	11.8		7.4	81.5	11.1	0		
PHF	.000	.750	.500	.000	.667	.500	.625	.250	.000	.850	.250	.917	.500	.500	.607	.500	.611	.750	.000	.614	.821

Counts Unlimited Inc.
25286 Jaclyn Avenue
Moreno Valley, CA 92557
951-485-7934

City of Rancho Cucamonga
N/S: Milliken Avenue
E/W: Foothill Boulevard
Weather: Sunny

File Name : RNCMIFOAM
Site Code : 91501963
Start Date : 6/3/2009
Page No : 2

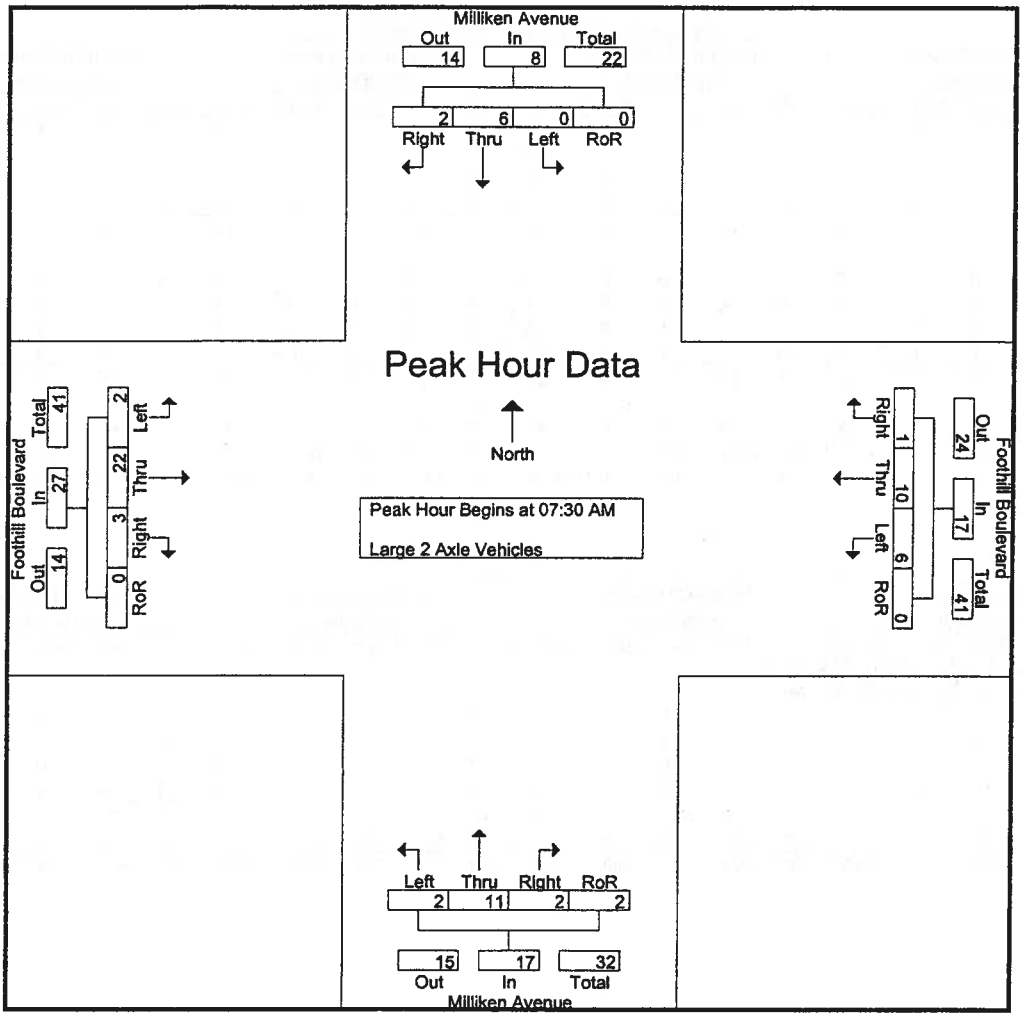

Peak Hour Analysis From 07:30 AM to 08:15 AM - Peak 1 of 1

Peak Hour for Each Approach Begins at:

	07:30 AM					07:30 AM					07:30 AM					07:30 AM				
+0 mins.	0	2	1	0	3	3	1	0	0	4	0	3	0	0	3	1	4	1	0	6
+15 mins.	0	1	0	0	1	2	2	1	0	5	0	2	1	0	3	0	2	1	0	3
+30 mins.	0	2	0	0	2	1	3	0	0	4	2	3	1	1	7	0	7	0	0	7
+45 mins.	0	1	1	0	2	0	4	0	0	4	0	3	0	1	4	1	9	1	0	11
Total Volume	0	6	2	0	8	6	10	1	0	17	2	11	2	2	17	2	22	3	0	27
% App. Total	0	75	25	0		35.3	58.8	5.9	0		11.8	64.7	11.8	11.8		7.4	81.5	11.1	0	
PHF	.000	.750	.500	.000	.667	.500	.625	.250	.000	.850	.250	.917	.500	.500	.607	.500	.611	.750	.000	.614

Counts Unlimited Inc.
25286 Jaclyn Avenue
Moreno Valley, CA 92557
951-485-7934

City of Rancho Cucamonga
N/S: Milliken Avenue
E/W: Foothill Boulevard
Weather: Sunny

File Name : RNCMIFOAM
Site Code : 91501963
Start Date : 6/3/2009
Page No : 1

Groups Printed- 3 Axle Vehicles

	Milliken Avenue Southbound					Foothill Boulevard Westbound					Milliken Avenue Northbound					Foothill Boulevard Eastbound					
Start Time	Left	Thru	Right	RoR	App. Total	Left	Thru	Right	RoR	App. Total	Left	Thru	Right	RoR	App. Total	Left	Thru	Right	RoR	App. Total	Int. Total
07:00 AM	0	2	1	0	3	0	1	0	0	1	0	1	0	0	1	0	0	0	0	0	5
07:15 AM	0	0	0	0	0	0	0	0	0	0	0	0	0	0	0	0	0	0	0	0	0
07:30 AM	0	0	2	0	2	0	1	0	0	1	0	0	0	0	0	0	1	0	0	1	4
07:45 AM	0	1	0	0	1	0	1	0	0	1	0	0	0	0	0	0	1	0	0	1	3
Total	0	3	3	0	6	0	3	0	0	3	0	1	0	0	1	0	2	0	0	2	12
08:00 AM	0	0	0	0	0	0	0	0	0	0	0	0	0	0	0	0	1	0	0	1	1
08:15 AM	0	1	0	0	1	1	0	0	0	1	0	0	0	0	0	0	0	1	0	1	3
08:30 AM	0	0	0	0	0	0	0	0	0	0	0	0	0	0	0	0	0	1	0	1	1
08:45 AM	0	0	0	0	0	0	0	0	0	0	0	1	0	0	1	0	1	1	0	2	3
Total	0	1	0	0	1	1	0	0	0	1	0	1	0	0	1	0	2	3	0	5	8
Grand Total	0	4	3	0	7	1	3	0	0	4	0	2	0	0	2	0	4	3	0	7	20
Apprch %	0	57.1	42.9	0		25	75	0	0		0	100	0	0		0	57.1	42.9	0		
Total %	0	20	15	0	35	5	15	0	0	20	0	10	0	0	10	0	20	15	0	35	

	Milliken Avenue Southbound					Foothill Boulevard Westbound					Milliken Avenue Northbound					Foothill Boulevard Eastbound					
Start Time	Left	Thru	Right	RoR	App. Total		Thru	Right	RoR	App. Total		Thru	Right	RoR	App. Total		Thru	Right	RoR	App. Total	Int. Total
Peak Hour Analysis From 07:30 AM to 08:15 AM - Peak 1 of 1																					
Peak Hour for Entire Intersection Begins at 07:30 AM																					
07:30 AM	0	0	2	0	2	0	1	0	0	1	0	0	0	0	0	0	1	0	0	1	4
07:45 AM	0	1	0	0	1	0	1	0	0	1	0	0	0	0	0	0	1	0	0	1	3
08:00 AM	0	0	0	0	0	0	0	0	0	0	0	0	0	0	0	0	1	0	0	1	1
08:15 AM	0	1	0	0	1	1	0	0	0	1	0	0	0	0	0	0	0	1	0	1	3
Total Volume	0	2	2	0	4	1	2	0	0	3	0	0	0	0	0	0	3	1	0	4	11
% App. Total	0	50	50	0		33.3	66.7	0	0		0	0	0	0		0	75	25	0		
PHF	.000	.500	.250	.000	.500	.250	.500	.000	.000	.750	.000	.000	.000	.000	.000	.000	.750	.250	.000	1.000	.688

Counts Unlimited Inc.
25286 Jaclyn Avenue
Moreno Valley, CA 92557
951-485-7934

City of Rancho Cucamonga
N/S: Milliken Avenue
E/W: Foothill Boulevard
Weather: Sunny

File Name : RNCMIFOAM
Site Code : 91501963
Start Date : 6/3/2009
Page No : 2

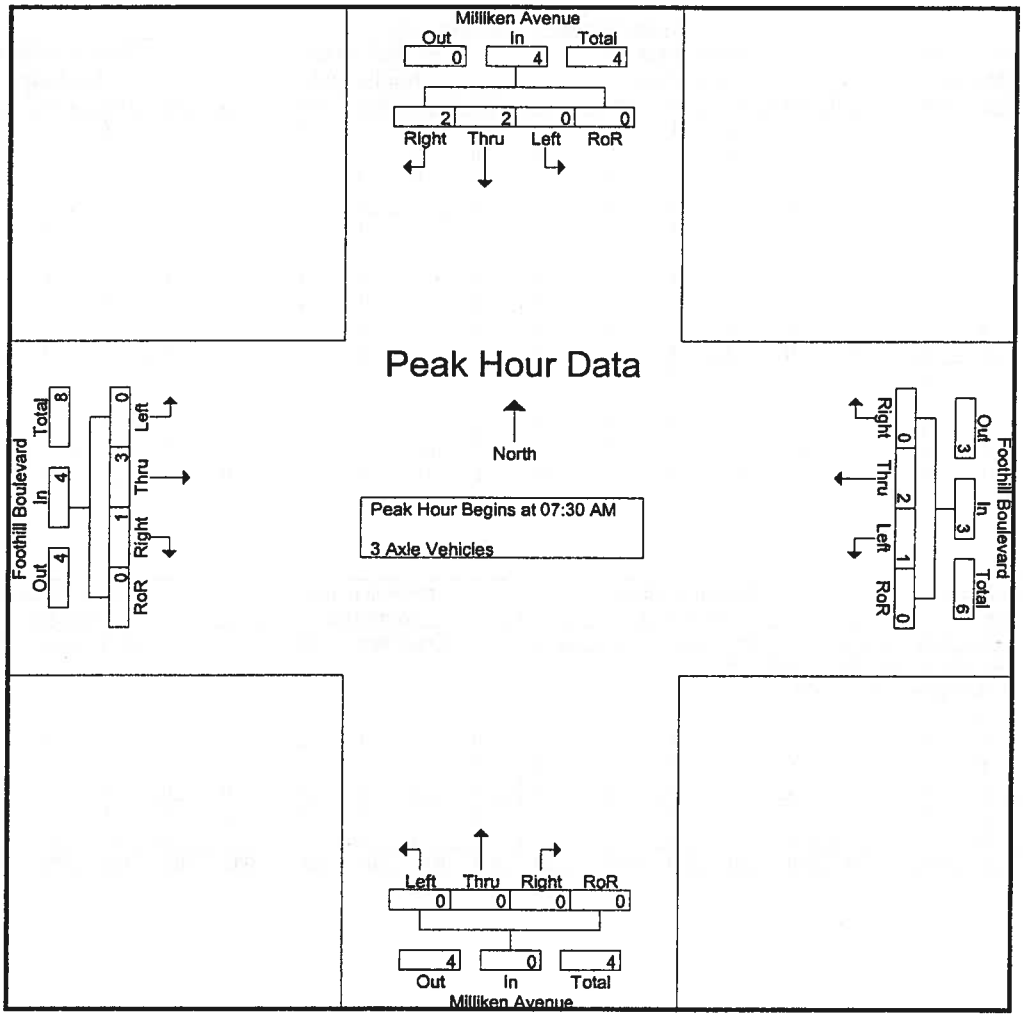

Peak Hour Analysis From 07:30 AM to 08:15 AM - Peak 1 of 1

Peak Hour for Each Approach Begins at:

	07:30 AM					07:30 AM					07:30 AM					07:30 AM				
+0 mins.	0	0	2	0	2	0	1	0	0	1	0	0	0	0	0	0	1	0	0	1
+15 mins.	0	1	0	0	1	0	1	0	0	1	0	0	0	0	0	0	1	0	0	1
+30 mins.	0	0	0	0	0	0	0	0	0	0	0	0	0	0	0	0	1	0	0	1
+45 mins.	0	1	0	0	1	1	0	0	0	1	0	0	0	0	0	0	0	1	0	1
Total Volume	0	2	2	0	4	1	2	0	0	3	0	0	0	0	0	0	3	1	0	4
% App. Total	0	50	50	0		33.3	66.7	0	0		0	0	0	0		0	75	25	0	
PHF	.000	.500	.250	.000	.500	.250	.500	.000	.000	.750	.000	.000	.000	.000	.000	.000	.750	.250	.000	1.000

Counts Unlimited Inc.
25286 Jaclyn Avenue
Moreno Valley, CA 92557
951-485-7934

City of Rancho Cucamonga
N/S: Milliken Avenue
E/W: Foothill Boulevard
Weather: Sunny

File Name : RNCMIFOAM
Site Code : 91501963
Start Date : 6/3/2009
Page No : 1

Groups Printed- 4+ Axle Trucks

	Milliken Avenue Southbound					Foothill Boulevard Westbound					Milliken Avenue Northbound					Foothill Boulevard Eastbound					
Start Time	Left	Thru	Right	RoR	App. Total	Left	Thru	Right	RoR	App. Total	Left	Thru	Right	RoR	App. Total	Left	Thru	Right	RoR	App. Total	Int. Total
07:00 AM	0	0	0	0	0	0	3	0	1	4	1	0	0	0	1	0	0	1	0	1	6
07:15 AM	0	0	0	0	0	3	0	0	0	3	0	0	0	0	0	0	2	0	0	2	5
07:30 AM	0	0	0	0	0	0	0	0	0	0	0	2	0	2	4	0	1	0	0	1	5
07:45 AM	0	0	0	0	0	0	0	0	0	0	0	0	0	0	0	0	0	0	0	0	0
Total	0	0	0	0	0	3	3	0	1	7	1	2	0	2	5	0	3	1	0	4	16
08:00 AM	0	0	0	0	0	0	0	0	0	0	0	1	1	0	2	0	0	0	0	0	2
08:15 AM	0	0	0	0	0	0	3	0	0	3	0	3	0	0	3	0	2	0	0	2	8
08:30 AM	1	4	0	0	5	2	0	0	0	2	2	2	1	0	5	0	0	0	0	0	12
08:45 AM	0	0	0	0	0	3	1	0	0	4	0	0	1	0	1	0	3	0	1	4	9
Total	1	4	0	0	5	5	4	0	0	9	2	6	3	0	11	0	5	0	1	6	31
Grand Total	1	4	0	0	5	8	7	0	1	16	3	8	3	2	16	0	8	1	1	10	47
Apprch %	20	80	0	0		50	43.8	0	6.2		18.8	50	18.8	12.5		0	80	10	10		
Total %	2.1	8.5	0	0	10.6	17	14.9	0	2.1	34	6.4	17	6.4	4.3	34	0	17	2.1	2.1	21.3	

	Milliken Avenue Southbound					Foothill Boulevard Westbound					Milliken Avenue Northbound					Foothill Boulevard Eastbound					
Start Time	Left	Thru	Right	RoR	App. Total		Thru	Right	RoR	App. Total		Thru	Right	RoR	App. Total		Thru	Right	RoR	App. Total	Int. Total
Peak Hour Analysis From 07:30 AM to 08:15 AM - Peak 1 of 1																					
Peak Hour for Entire Intersection Begins at 07:30 AM																					
07:30 AM	0	0	0	0	0	0	0	0	0	0	0	2	0	2	4	0	1	0	0	1	5
07:45 AM	0	0	0	0	0	0	0	0	0	0	0	0	0	0	0	0	0	0	0	0	0
08:00 AM	0	0	0	0	0	0	0	0	0	0	0	1	1	0	2	0	0	0	0	0	2
08:15 AM	0	0	0	0	0	0	3	0	0	3	0	3	0	0	3	0	2	0	0	2	8
Total Volume	0	0	0	0	0	0	3	0	0	3	0	6	1	2	9	0	3	0	0	3	15
% App. Total	0	0	0	0		0	100	0	0		0	66.7	11.1	22.2		0	100	0	0		
PHF	.000	.000	.000	.000	.000	.000	.250	.000	.000	.250	.000	.500	.250	.250	.563	.000	.375	.000	.000	.375	.469

Counts Unlimited Inc.
25286 Jaclyn Avenue
Moreno Valley, CA 92557
951-485-7934

City of Rancho Cucamonga
N/S: Milliken Avenue
E/W: Foothill Boulevard
Weather: Sunny

File Name : RNCMIFOAM
Site Code : 91501963
Start Date : 6/3/2009
Page No : 2

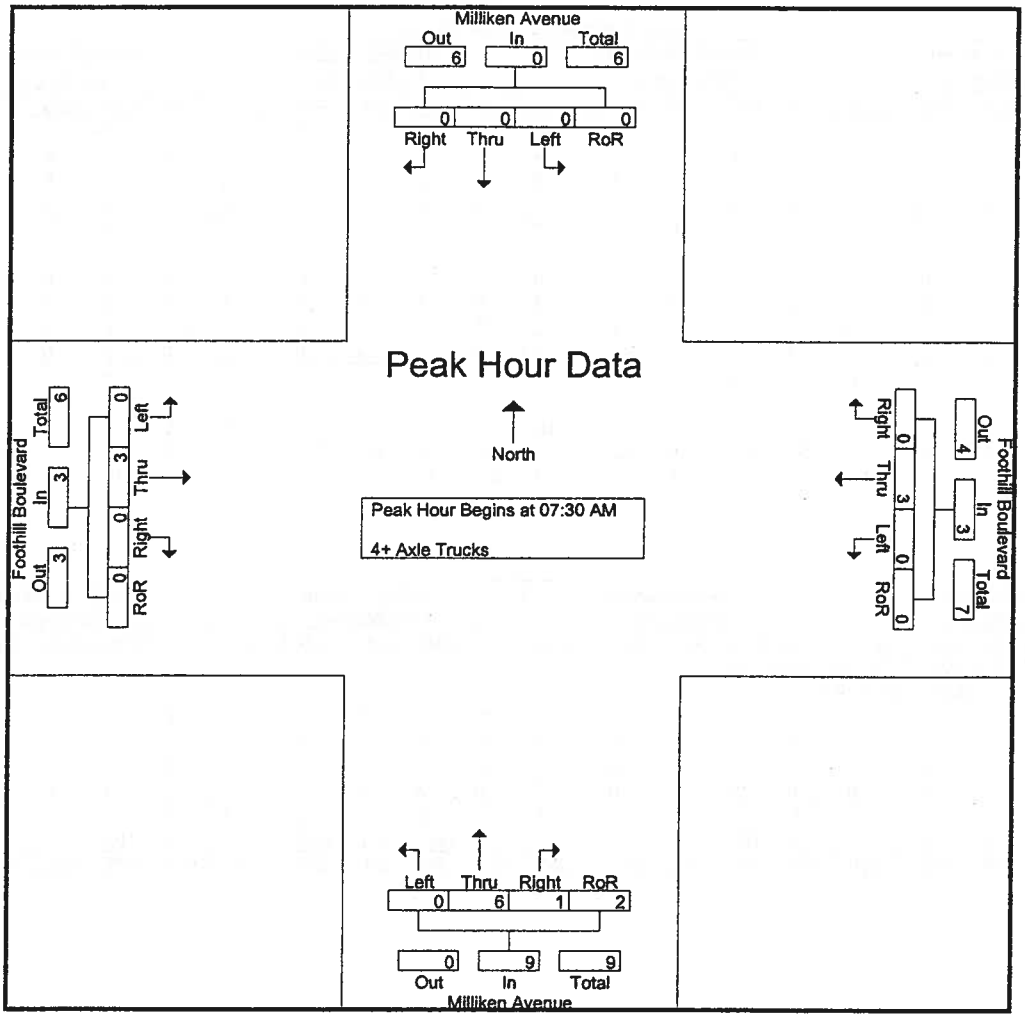

Peak Hour Analysis From 07:30 AM to 08:15 AM - Peak 1 of 1

Peak Hour for Each Approach Begins at:

	07:30 AM					07:30 AM					07:30 AM					07:30 AM				
+0 mins.	0	0	0	0	0	0	0	0	0	0	0	2	0	2	4	0	1	0	0	1
+15 mins.	0	0	0	0	0	0	0	0	0	0	0	0	0	0	0	0	0	0	0	0
+30 mins.	0	0	0	0	0	0	0	0	0	0	0	1	1	0	2	0	0	0	0	0
+45 mins.	0	0	0	0	0	0	3	0	0	3	0	3	0	0	3	0	2	0	0	2
Total Volume	0	0	0	0	0	0	3	0	0	3	0	6	1	2	9	0	3	0	0	3
% App. Total	0	0	0	0		0	100	0	0		0	66.7	11.1	22.2		0	100	0	0	
PHF	.000	.000	.000	.000	.000	.000	.250	.000	.000	.250	.000	.500	.250	.250	.563	.000	.375	.000	.000	.375

Counts Unlimited Inc.
25286 Jaclyn Avenue
Moreno Valley, CA 92557
951-485-7934

City of Rancho Cucamonga
N/S: Milliken Avenue
E/W: Foothill Boulevard
Weather: Sunny

File Name : RNCMIFOPM
Site Code : 91501963
Start Date : 6/4/2009
Page No : 1

Groups Printed- Passenger Vehicles - Large 2 Axle Vehicles - 3 Axle Vehicles - 4+ Axle Trucks

	Milliken Avenue Southbound					Foothill Boulevard Westbound					Milliken Avenue Northbound					Foothill Boulevard Eastbound					
Start Time	Left	Thru	Right	RoR	App. Total	Left	Thru	Right	RoR	App. Total	Left	Thru	Right	RoR	App. Total	Left	Thru	Right	RoR	App. Total	Int. Total
04:00 PM	32	106	16	18	172	43	173	17	9	242	62	206	33	22	323	59	294	29	13	395	1132
04:15 PM	36	120	17	14	187	48	186	22	13	269	74	291	44	31	440	51	291	24	11	377	1273
04:30 PM	42	90	17	17	166	41	163	23	9	236	69	273	80	20	442	73	299	21	19	412	1256
04:45 PM	42	114	8	21	185	48	156	18	14	236	67	302	64	16	449	70	337	18	27	452	1322
Total	152	430	58	70	710	180	678	80	45	983	272	1072	221	89	1654	253	1221	92	70	1636	4983
05:00 PM	28	87	7	13	135	42	174	31	10	257	74	334	73	36	517	85	381	17	15	498	1407
05:15 PM	45	114	13	18	190	45	175	27	6	253	91	359	72	25	547	42	342	26	14	424	1414
05:30 PM	47	85	15	9	156	47	152	15	17	231	81	362	74	28	545	74	276	15	14	379	1311
05:45 PM	40	128	23	19	210	33	123	31	12	199	72	333	72	32	509	56	257	21	3	337	1255
Total	160	414	58	59	691	167	624	104	45	940	318	1388	291	121	2118	257	1256	79	46	1638	5387
Grand Total	312	844	116	129	1401	347	1302	184	90	1923	590	2460	512	210	3772	510	2477	171	116	3274	10370
Apprch %	22.3	60.2	8.3	9.2		18	67.7	9.6	4.7		15.6	65.2	13.6	5.6		15.6	75.7	5.2	3.5		
Total %	3	8.1	1.1	1.2	13.5	3.3	12.6	1.8	0.9	18.5	5.7	23.7	4.9	2	36.4	4.9	23.9	1.6	1.1	31.6	
Passenger Vehicles							1275					2426					2441				10196
% Passenger Vehicles	99	98.1	99.1	99.2	98.5	98	97.9	98.9	98.9	98.1	97.8	98.6	97.7	98.6	98.4	97.8	98.5	97.7	97.4	98.4	98.3
Large 2 Axle Vehicles																					
% Large 2 Axle Vehicles	1	1.3	0.9	0.8	1.1	1.2	1.8	1.1	1.1	1.6	1.9	1	1	1	1.1	2	1.4	1.8	0.9	1.5	1.3
3 Axle Vehicles	0	1	0	0	1	0	0	0	0	0	0	1	1	0	2	0	0	1	0	1	4
% 3 Axle Vehicles	0	0.1	0	0	0.1	0	0	0	0	0	0	0	0.2	0	0.1	0	0	0.6	0	0	0
4+ Axle Trucks	0	4	0	0	4	3	3	0	0	6	2	9	6	1	18	1	2	0	2	5	33
% 4+ Axle Trucks																					

	Milliken Avenue Southbound					Foothill Boulevard Westbound					Milliken Avenue Northbound					Foothill Boulevard Eastbound					
Start Time	Left	Thru	Right	RoR	App. Total	Left	Thru	Right	RoR	App. Total	Left	Thru	Right	RoR	App. Total	Left	Thru	Right	RoR	App. Total	Int. Total
Peak Hour Analysis From 04:00 PM to 05:45 PM - Peak 1 of 1																					
Peak Hour for Entire Intersection Begins at 04:45 PM																					
04:45 PM	42	114	8	**21**	185	**48**	156	18	14	236	67	302	64	16	449	70	337	18	**27**	452	1322
05:00 PM	28	87	7	13	135	42	174	**31**	10	**257**	74	334	73	**36**	517	**85**	**381**	17	15	**498**	1407
05:15 PM	45	114	13	18	**190**	45	**175**	27	6	253	**91**	359	72	25	**547**	42	342	**26**	14	424	**1414**
05:30 PM	**47**	85	**15**	9	156	47	152	15	**17**	231	81	**362**	**74**	28	545	74	276	15	14	379	1311
Total Volume	162	400	43	61	666	182	657	91	47	977	313	1357	283	105	2058	271	1336	76	70	1753	5454
% App. Total	24.3	60.1	6.5	9.2		18.6	67.2	9.3	4.8		15.2	65.9	13.8	5.1		15.5	76.2	4.3	4		
PHF	.862	.877	.717	.726	.876	.948	.939	.734	.691	.950	.860	.937	.956	.729	.941	.797	.877	.731	.648	.880	.964

Counts Unlimited Inc.
25286 Jaclyn Avenue
Moreno Valley, CA 92557
951-485-7934

City of Rancho Cucamonga
N/S: Milliken Avenue
E/W: Foothill Boulevard
Weather: Sunny

File Name : RNCMIFOPM
Site Code : 91501963
Start Date : 6/4/2009
Page No : 2

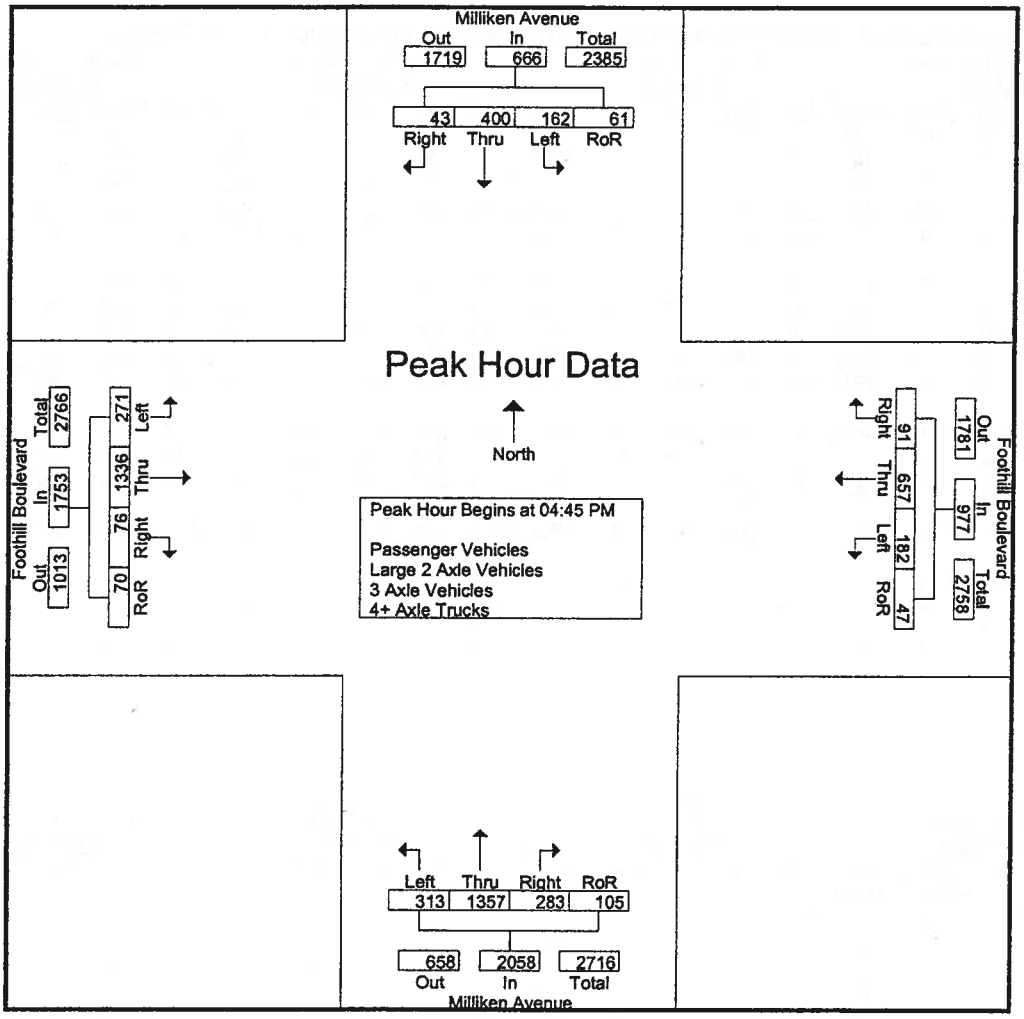

Peak Hour Analysis From 04:00 PM to 05:45 PM - Peak 1 of 1

Peak Hour for Each Approach Begins at:

	04:00 PM					04:15 PM					05:00 PM					04:30 PM				
+0 mins.	32	106	16	18	172	**48**	**186**	22	13	**269**	74	334	73	**36**	517	73	299	21	19	412
+15 mins.	36	**120**	**17**	14	**187**	41	163	23	9	236	**91**	359	72	25	**547**	70	337	18	**27**	452
+30 mins.	**42**	90	17	17	166	48	156	18	**14**	236	81	**362**	**74**	28	545	**85**	**381**	17	15	**498**
+45 mins.	42	114	8	**21**	185	42	174	**31**	10	257	72	333	72	32	509	42	342	**26**	14	424
Total Volume	152	430	58	70	710	179	679	94	46	998	318	1388	291	121	2118	270	1359	82	75	1786
% App. Total	21.4	60.6	8.2	9.9		17.9	68	9.4	4.6		15	65.5	13.7	5.7		15.1	76.1	4.6	4.2	
PHF	.905	.896	.853	.833	.949	.932	.913	.758	.821	.928	.874	.959	.983	.840	.968	.794	.892	.788	.694	.897

Counts Unlimited Inc.
25286 Jaclyn Avenue
Moreno Valley, CA 92557
951-485-7934

City of Rancho Cucamonga
N/S: Milliken Avenue
E/W: Foothill Boulevard
Weather: Sunny

File Name : RNCMIFOPM
Site Code : 91501963
Start Date : 6/4/2009
Page No : 1

Groups Printed- Passenger Vehicles

	Milliken Avenue Southbound					Foothill Boulevard Westbound					Milliken Avenue Northbound					Foothill Boulevard Eastbound					
Start Time	Left	Thru	Right	RoR	App. Total	Left	Thru	Right	RoR	App. Total	Left	Thru	Right	RoR	App. Total	Left	Thru	Right	RoR	App. Total	Int. Total
04:00 PM	31	102	16	18	167	42	170	17	9	238	62	202	32	21	317	58	292	28	13	391	1113
04:15 PM	36	116	17	13	182	47	181	22	13	263	69	284	43	30	426	51	289	24	11	375	1246
04:30 PM	41	90	17	17	165	41	159	23	9	232	67	268	78	20	433	73	295	21	19	408	1238
04:45 PM	42	114	8	21	185	47	155	18	14	234	66	297	64	15	442	69	334	17	26	446	1307
Total	150	422	58	69	699	177	665	80	45	967	264	1051	217	86	1618	251	1210	90	69	1620	4904
05:00 PM	28	86	7	13	134	42	171	31	9	253	74	331	71	36	512	79	374	16	14	483	1382
05:15 PM	44	108	13	18	183	44	170	27	6	247	88	357	71	25	541	42	337	25	13	417	1388
05:30 PM	47	85	15	9	156	45	149	14	17	225	80	359	73	28	540	72	269	15	14	370	1291
05:45 PM	40	127	22	19	208	32	120	30	12	194	71	328	68	32	499	55	251	21	3	330	1231
Total	159	406	57	59	681	163	610	102	44	919	313	1375	283	121	2092	248	1231	77	44	1600	5292
Grand Total	309	828	115	128	1380	340	1275	182	89	1886	577	2426	500	207	3710	499	2441	167	113	3220	10196
Apprch %	22.4	60	8.3	9.3		18	67.6	9.7	4.7		15.6	65.4	13.5	5.6		15.5	75.8	5.2	3.5		
Total %	3	8.1	1.1	1.3	13.5	3.3	12.5	1.8	0.9	18.5	5.7	23.8	4.9	2	36.4	4.9	23.9	1.6	1.1	31.6	

	Milliken Avenue Southbound					Foothill Boulevard Westbound					Milliken Avenue Northbound					Foothill Boulevard Eastbound					
Start Time	Left	Thru	Right	RoR	App. Total		Thru	Right	RoR	App. Total		Thru	Right	RoR	App. Total		Thru	Right	RoR	App. Total	Int. Total
Peak Hour Analysis From 04:45 PM to 05:30 PM - Peak 1 of 1																					
Peak Hour for Entire Intersection Begins at 04:45 PM																					
04:45 PM	42	114	8	21	185	47	155	18	14	234	66	297	64	15	442	69	334	17	26	446	1307
05:00 PM	28	86	7	13	134	42	171	31	9	253	74	331	71	36	512	79	374	16	14	483	1382
05:15 PM	44	108	13	18	183	44	170	27	6	247	88	357	71	25	541	42	337	25	13	417	1388
05:30 PM	47	85	15	9	156	45	149	14	17	225	80	359	73	28	540	72	269	15	14	370	1291
Total Volume	161	393	43	61	658	178	645	90	46	959	308	1344	279	104	2035	262	1314	73	67	1716	5368
% App. Total	24.5	59.7	6.5	9.3		18.6	67.3	9.4	4.8		15.1	66	13.7	5.1		15.3	76.6	4.3	3.9		
PHF	.856	.862	.717	.726	.889	.947	.943	.726	.676	.948	.875	.936	.955	.722	.940	.829	.878	.730	.644	.888	.967

Counts Unlimited Inc.
25286 Jaclyn Avenue
Moreno Valley, CA 92557
951-485-7934

City of Rancho Cucamonga
N/S: Milliken Avenue
E/W: Foothill Boulevard
Weather: Sunny

File Name : RNCMIFOPM
Site Code : 91501963
Start Date : 6/4/2009
Page No : 2

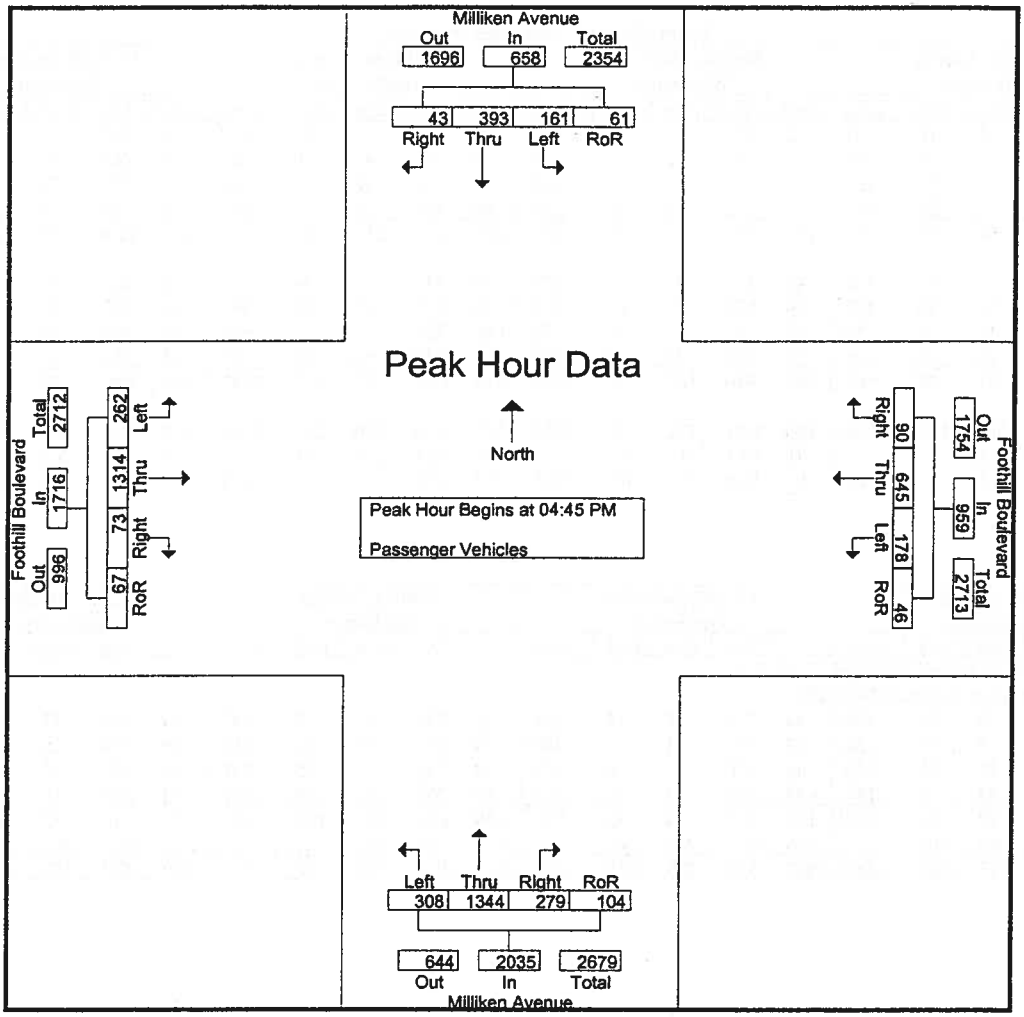

Peak Hour Analysis From 04:45 PM to 05:30 PM - Peak 1 of 1

Peak Hour for Each Approach Begins at:

	04:45 PM					04:45 PM					04:45 PM					04:45 PM				
+0 mins.	42	114	8	21	185	47	155	18	14	234	66	297	64	15	442	69	334	17	26	446
+15 mins.	28	86	7	13	134	42	171	31	9	253	74	331	71	36	512	79	374	16	14	483
+30 mins.	44	108	13	18	183	44	170	27	6	247	88	357	71	25	541	42	337	25	13	417
+45 mins.	47	85	15	9	156	45	149	14	17	225	80	359	73	28	540	72	269	15	14	370
Total Volume	161	393	43	61	658	178	645	90	46	959	308	1344	279	104	2035	262	1314	73	67	1716
% App. Total	24.5	59.7	6.5	9.3		18.6	67.3	9.4	4.8		15.1	66	13.7	5.1		15.3	76.6	4.3	3.9	
PHF	.856	.862	.717	.726	.889	.947	.943	.726	.676	.948	.875	.936	.955	.722	.940	.829	.878	.730	.644	.888

Counts Unlimited Inc.
25286 Jaclyn Avenue
Moreno Valley, CA 92557
951-485-7934

City of Rancho Cucamonga
N/S: Milliken Avenue
E/W: Foothill Boulevard
Weather: Sunny

File Name : RNCMIFOPM
Site Code : 91501963
Start Date : 6/4/2009
Page No : 1

Groups Printed- Large 2 Axle Vehicles

	Milliken Avenue Southbound					Foothill Boulevard Westbound					Milliken Avenue Northbound					Foothill Boulevard Eastbound					
Start Time	Left	Thru	Right	RoR	App. Total	Left	Thru	Right	RoR	App. Total	Left	Thru	Right	RoR	App. Total	Left	Thru	Right	RoR	App. Total	Int. Total
04:00 PM	1	3	0	0	4	1	3	0	0	4	0	3	0	0	3	1	1	1	0	3	14
04:15 PM	0	3	0	1	4	1	4	0	0	5	4	6	1	1	12	0	2	0	0	2	23
04:30 PM	1	0	0	0	1	0	4	0	0	4	2	5	1	0	8	0	4	0	0	4	17
04:45 PM	0	0	0	0	0	0	1	0	0	1	1	2	0	1	4	1	3	1	0	5	10
Total	2	6	0	1	9	2	12	0	0	14	7	16	2	2	27	2	10	2	0	14	64
05:00 PM	0	0	0	0	0	0	3	0	1	4	0	0	0	0	0	5	7	1	1	14	18
05:15 PM	1	4	0	0	5	1	4	0	0	5	3	2	1	0	6	0	4	0	0	4	20
05:30 PM	0	0	0	0	0	1	3	1	0	5	1	2	1	0	4	2	7	0	0	9	18
05:45 PM	0	1	1	0	2	0	2	1	0	3	0	4	1	0	5	1	6	0	0	7	17
Total	1	5	1	0	7	2	12	2	1	17	4	8	3	0	15	8	24	1	1	34	73
Grand Total	3	11	1	1	16	4	24	2	1	31	11	24	5	2	42	10	34	3	1	48	137
Apprch %	18.8	68.8	6.2	6.2		12.9	77.4	6.5	3.2		26.2	57.1	11.9	4.8		20.8	70.8	6.2	2.1		
Total %	2.2	8	0.7	0.7	11.7	2.9	17.5	1.5	0.7	22.6	8	17.5	3.6	1.5	30.7	7.3	24.8	2.2	0.7	35	

	Milliken Avenue Southbound					Foothill Boulevard Westbound					Milliken Avenue Northbound					Foothill Boulevard Eastbound					
Start Time	Left	Thru	Right	RoR	App. Total		Thru	Right	RoR	App. Total		Thru	Right	RoR	App. Total		Thru	Right	RoR	App. Total	Int. Total
Peak Hour Analysis From 04:45 PM to 05:30 PM - Peak 1 of 1																					
Peak Hour for Entire Intersection Begins at 04:45 PM																					
04:45 PM	0	0	0	0	0	0	1	0	0	1	1	2	0	1	4	1	3	1	0	5	10
05:00 PM	0	0	0	0	0	0	3	0	1	4	0	0	0	0	0	5	7	1	1	14	18
05:15 PM	1	4	0	0	5	1	4	0	0	5	3	2	1	0	6	0	4	0	0	4	20
05:30 PM	0	0	0	0	0	1	3	1	0	5	1	2	1	0	4	2	7	0	0	9	18
Total Volume	1	4	0	0	5	2	11	1	1	15	5	6	2	1	14	8	21	2	1	32	66
% App. Total	20	80	0	0		13.3	73.3	6.7	6.7		35.7	42.9	14.3	7.1		25	65.6	6.2	3.1		
PHF	.250	.250	.000	.000	.250	.500	.688	.250	.250	.750	.417	.750	.500	.250	.583	.400	.750	.500	.250	.571	.825

Counts Unlimited Inc.
25286 Jaclyn Avenue
Moreno Valley, CA 92557
951-485-7934

City of Rancho Cucamonga
N/S: Milliken Avenue
E/W: Foothill Boulevard
Weather: Sunny

File Name : RNCMIFOPM
Site Code : 91501963
Start Date : 6/4/2009
Page No : 2

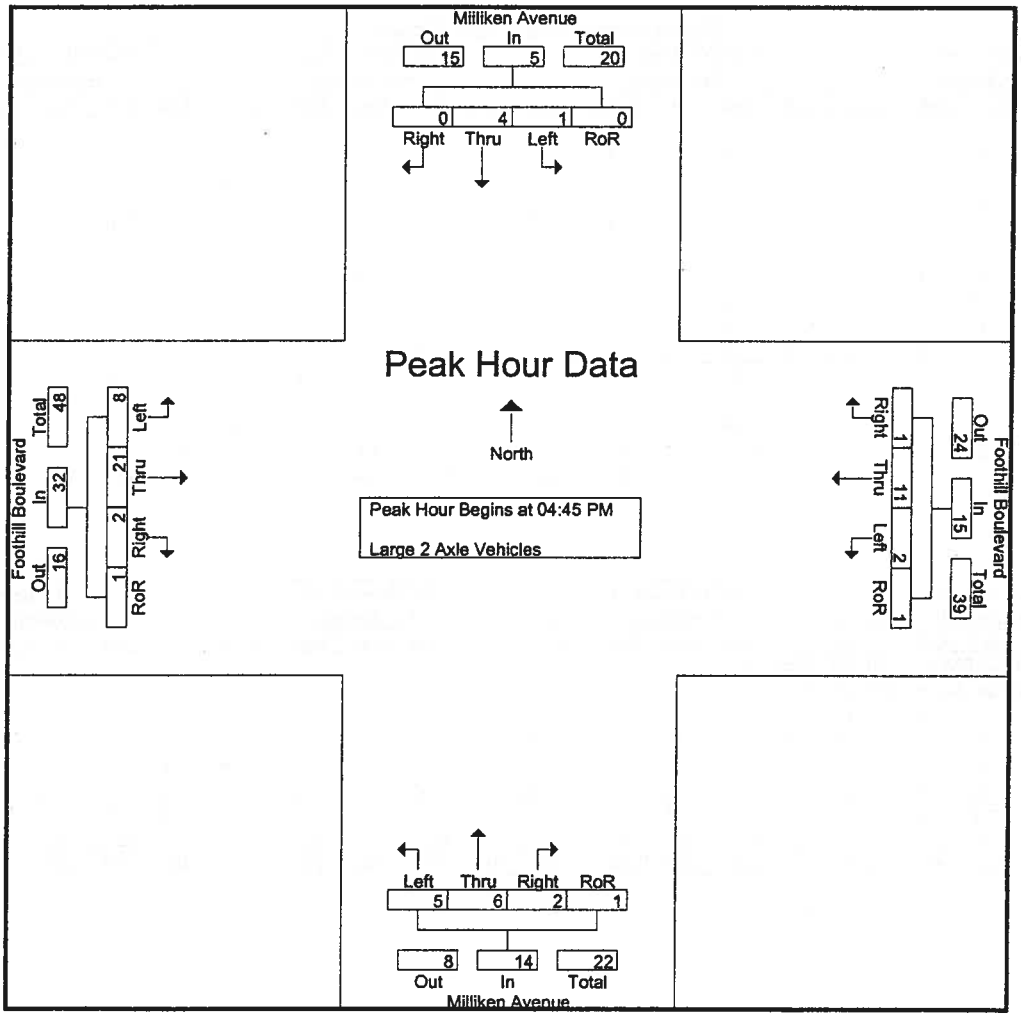

Peak Hour Analysis From 04:45 PM to 05:30 PM - Peak 1 of 1

Peak Hour for Each Approach Begins at:

	04:45 PM					04:45 PM					04:45 PM					04:45 PM				
+0 mins.	0	0	0	0	0	0	1	0	0	1	1	2	0	1	4	1	3	1	0	5
+15 mins.	0	0	0	0	0	0	3	0	1	4	0	0	0	0	0	5	7	1	1	14
+30 mins.	1	4	0	0	5	1	4	0	0	5	3	2	1	0	6	0	4	0	0	4
+45 mins.	0	0	0	0	0	1	3	1	0	5	1	2	1	0	4	2	7	0	0	9
Total Volume	1	4	0	0	5	2	11	1	1	15	5	6	2	1	14	8	21	2	1	32
% App. Total	20	80	0	0		13.3	73.3	6.7	6.7		35.7	42.9	14.3	7.1		25	65.6	6.2	3.1	
PHF	.250	.250	.000	.000	.250	.500	.688	.250	.250	.750	.417	.750	.500	.250	.583	.400	.750	.500	.250	.571

Counts Unlimited Inc.
25286 Jaclyn Avenue
Moreno Valley, CA 92557
951-485-7934

City of Rancho Cucamonga
N/S: Milliken Avenue
E/W: Foothill Boulevard
Weather: Sunny

File Name : RNCMIFOPM
Site Code : 91501963
Start Date : 6/4/2009
Page No : 1

Groups Printed- 3 Axle Vehicles

	Milliken Avenue Southbound					Foothill Boulevard Westbound					Milliken Avenue Northbound					Foothill Boulevard Eastbound					
Start Time	Left	Thru	Right	RoR	App. Total	Left	Thru	Right	RoR	App. Total	Left	Thru	Right	RoR	App. Total	Left	Thru	Right	RoR	App. Total	Int. Total
04:00 PM	0	0	0	0	0	0	0	0	0	0	0	0	0	0	0	0	0	0	0	0	0
04:15 PM	0	0	0	0	0	0	0	0	0	0	0	0	0	0	0	0	0	0	0	0	0
04:30 PM	0	0	0	0	0	0	0	0	0	0	0	0	0	0	0	0	0	0	0	0	0
04:45 PM	0	0	0	0	0	0	0	0	0	0	0	0	0	0	0	0	0	0	0	0	0
Total	0	0	0	0	0	0	0	0	0	0	0	0	0	0	0	0	0	0	0	0	0
05:00 PM	0	0	0	0	0	0	0	0	0	0	0	1	1	0	2	0	0	0	0	0	2
05:15 PM	0	1	0	0	1	0	0	0	0	0	0	0	0	0	0	0	0	1	0	1	2
05:30 PM	0	0	0	0	0	0	0	0	0	0	0	0	0	0	0	0	0	0	0	0	0
05:45 PM	0	0	0	0	0	0	0	0	0	0	0	0	0	0	0	0	0	0	0	0	0
Total	0	1	0	0	1	0	0	0	0	0	0	1	1	0	2	0	0	1	0	1	4
Grand Total	0	1	0	0	1	0	0	0	0	0	0	1	1	0	2	0	0	1	0	1	4
Apprch %	0	100	0	0		0	0	0	0		0	50	50	0		0	0	100	0		
Total %	0	25	0	0	25	0	0	0	0	0	0	25	25	0	50	0	0	25	0	25	

	Milliken Avenue Southbound					Foothill Boulevard Westbound					Milliken Avenue Northbound					Foothill Boulevard Eastbound					
Start Time	Left	Thru	Right	RoR	App. Total	Left	Thru	Right	RoR	App. Total	Left	Thru	Right	RoR	App. Total	Left	Thru	Right	RoR	App. Total	Int. Total
Peak Hour Analysis From 04:45 PM to 05:30 PM - Peak 1 of 1																					
Peak Hour for Entire Intersection Begins at 04:45 PM																					
04:45 PM	0	0	0	0	0	0	0	0	0	0	0	0	0	0	0	0	0	0	0	0	0
05:00 PM	0	0	0	0	0	0	0	0	0	0	0	1	1	0	2	0	0	0	0	0	2
05:15 PM	0	1	0	0	1	0	0	0	0	0	0	0	0	0	0	0	0	1	0	1	2
05:30 PM	0	0	0	0	0	0	0	0	0	0	0	0	0	0	0	0	0	0	0	0	0
Total Volume	0	1	0	0	1	0	0	0	0	0	0	1	1	0	2	0	0	1	0	1	4
% App. Total	0	100	0	0		0	0	0	0		0	50	50	0		0	0	100	0		
PHF	.000	.250	.000	.000	.250	.000	.000	.000	.000	.000	.000	.250	.250	.000	.250	.000	.000	.250	.000	.250	.500

Counts Unlimited Inc.
25286 Jaclyn Avenue
Moreno Valley, CA 92557
951-485-7934

City of Rancho Cucamonga
N/S: Milliken Avenue
E/W: Foothill Boulevard
Weather: Sunny

File Name : RNCMIFOPM
Site Code : 91501963
Start Date : 6/4/2009
Page No : 2

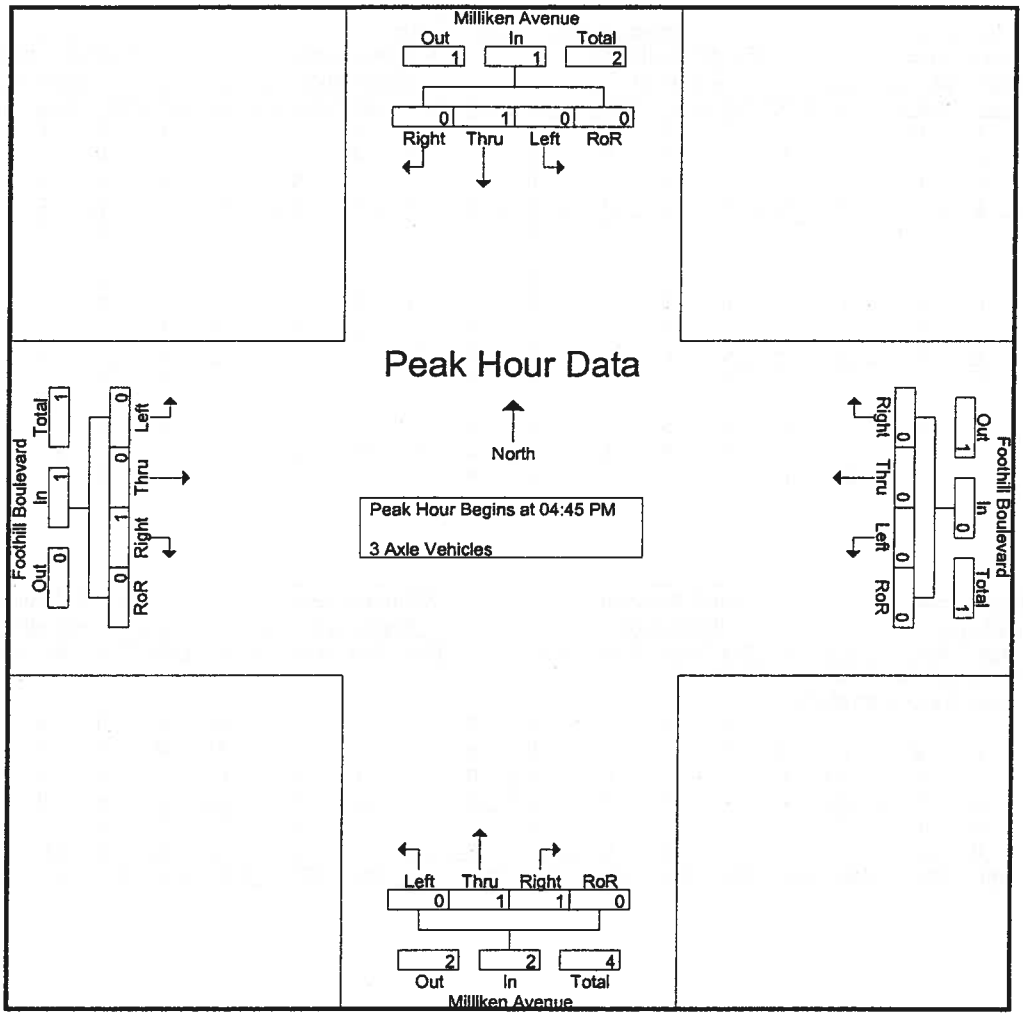

Peak Hour Analysis From 04:45 PM to 05:30 PM - Peak 1 of 1

Peak Hour for Each Approach Begins at:

	04:45 PM					04:45 PM					04:45 PM					04:45 PM				
+0 mins.	0	0	0	0	0	0	0	0	0	0	0	0	0	0	0	0	0	0	0	0
+15 mins.	0	0	0	0	0	0	0	0	0	0	0	1	1	0	2	0	0	0	0	0
+30 mins.	0	1	0	0	1	0	0	0	0	0	0	0	0	0	0	0	0	1	0	1
+45 mins.	0	0	0	0	0	0	0	0	0	0	0	0	0	0	0	0	0	0	0	0
Total Volume	0	1	0	0	1	0	0	0	0	0	0	1	1	0	2	0	0	1	0	1
% App. Total	0	100	0	0		0	0	0	0		0	50	50	0		0	0	100	0	
PHF	.000	.250	.000	.000	.250	.000	.000	.000	.000	.000	.000	.250	.250	.000	.250	.000	.000	.250	.000	.250

Counts Unlimited Inc.
25286 Jaclyn Avenue
Moreno Valley, CA 92557
951-485-7934

City of Rancho Cucamonga
N/S: Milliken Avenue
E/W: Foothill Boulevard
Weather: Sunny

File Name : RNCMIFOPM
Site Code : 91501963
Start Date : 6/4/2009
Page No : 1

Groups Printed- 4+ Axle Trucks

	Milliken Avenue Southbound					Foothill Boulevard Westbound					Milliken Avenue Northbound					Foothill Boulevard Eastbound					
Start Time	Left	Thru	Right	RoR	App. Total	Left	Thru	Right	RoR	App. Total	Left	Thru	Right	RoR	App. Total	Left	Thru	Right	RoR	App. Total	Int. Total
04:00 PM	0	1	0	0	1	0	0	0	0	0	0	1	1	1	3	0	1	0	0	1	5
04:15 PM	0	1	0	0	1	0	1	0	0	1	1	1	0	0	2	0	0	0	0	0	4
04:30 PM	0	0	0	0	0	0	0	0	0	0	0	0	1	0	1	0	0	0	0	0	1
04:45 PM	0	0	0	0	0	1	0	0	0	1	0	3	0	0	3	0	0	0	1	1	5
Total	0	2	0	0	2	1	1	0	0	2	1	5	2	1	9	0	1	0	1	2	15
05:00 PM	0	1	0	0	1	0	0	0	0	0	0	2	1	0	3	1	0	0	0	1	5
05:15 PM	0	1	0	0	1	0	1	0	0	1	0	0	0	0	0	0	1	0	1	2	4
05:30 PM	0	0	0	0	0	1	0	0	0	1	0	1	0	0	1	0	0	0	0	0	2
05:45 PM	0	0	0	0	0	1	1	0	0	2	1	1	3	0	5	0	0	0	0	0	7
Total	0	2	0	0	2	2	2	0	0	4	1	4	4	0	9	1	1	0	1	3	18
Grand Total	0	4	0	0	4	3	3	0	0	6	2	9	6	1	18	1	2	0	2	5	33
Apprch %	0	100	0	0		50	50	0	0		11.1	50	33.3	5.6		20	40	0	40		
Total %	0	12.1	0	0	12.1	9.1	9.1	0	0	18.2	6.1	27.3	18.2	3	54.5	3	6.1	0	6.1	15.2	

	Milliken Avenue Southbound					Foothill Boulevard Westbound					Milliken Avenue Northbound					Foothill Boulevard Eastbound					
Start Time	Left	Thru	Right	RoR	App. Total		Thru	Right	RoR	App. Total		Thru	Right	RoR	App. Total		Thru	Right	RoR	App. Total	Int. Total
Peak Hour Analysis From 04:45 PM to 05:30 PM - Peak 1 of 1																					
Peak Hour for Entire Intersection Begins at 04:45 PM																					
04:45 PM	0	0	0	0	0	1	0	0	0	1	0	3	0	0	3	0	0	0	1	1	5
05:00 PM	0	1	0	0	1	0	0	0	0	0	0	2	1	0	3	1	0	0	0	1	5
05:15 PM	0	1	0	0	1	0	1	0	0	1	0	0	0	0	0	0	1	0	1	2	4
05:30 PM	0	0	0	0	0	1	0	0	0	1	0	1	0	0	1	0	0	0	0	0	2
Total Volume	0	2	0	0	2	2	1	0	0	3	0	6	1	0	7	1	1	0	2	4	16
% App. Total	0	100	0	0		66.7	33.3	0	0		0	85.7	14.3	0		25	25	0	50		
PHF	.000	.500	.000	.000	.500	.500	.250	.000	.000	.750	.000	.500	.250	.000	.583	.250	.250	.000	.500	.500	.800

Counts Unlimited Inc.
25286 Jaclyn Avenue
Moreno Valley, CA 92557
951-485-7934

City of Rancho Cucamonga
N/S: Milliken Avenue
E/W: Foothill Boulevard
Weather: Sunny

File Name : RNCMIFOPM
Site Code : 91501963
Start Date : 6/4/2009
Page No : 2

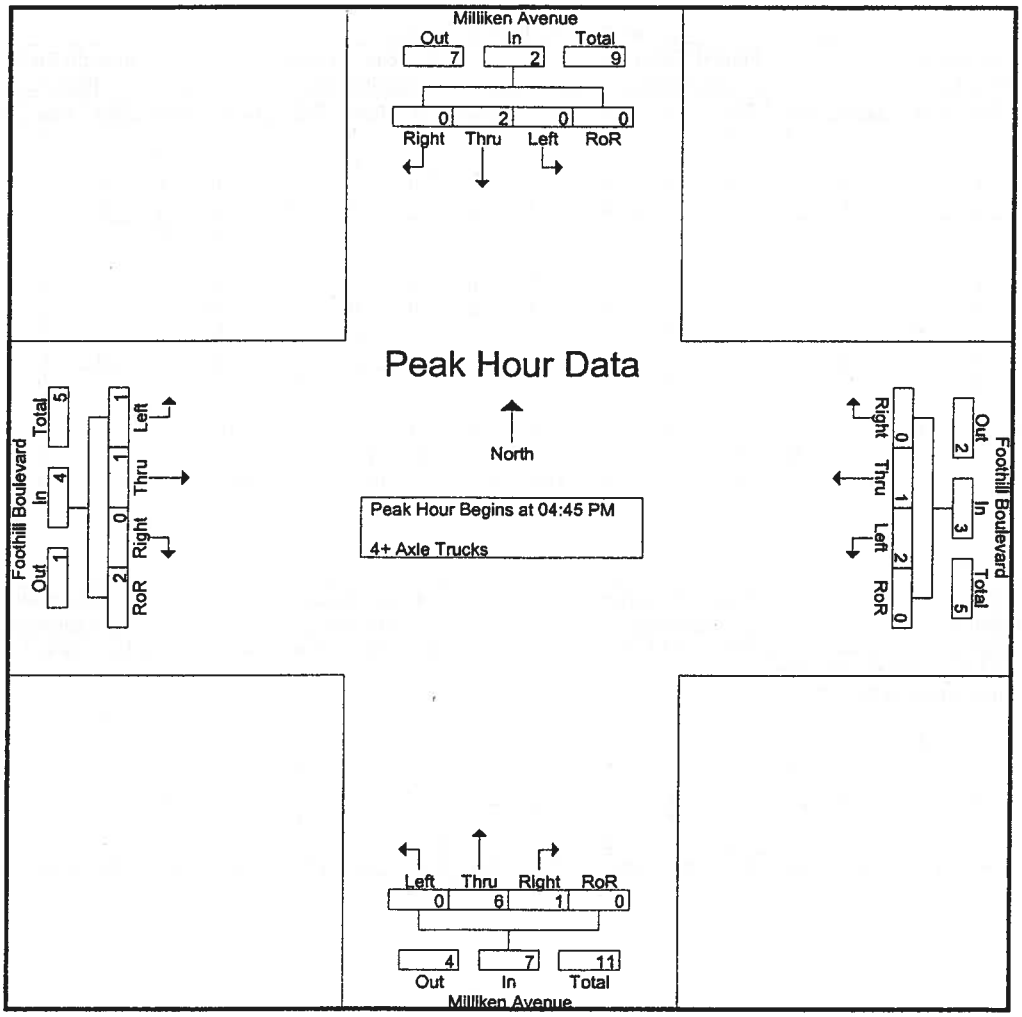

Peak Hour Analysis From 04:45 PM to 05:30 PM - Peak 1 of 1

Peak Hour for Each Approach Begins at:

	04:45 PM					04:45 PM					04:45 PM					04:45 PM				
+0 mins.	0	0	0	0	0	1	0	0	0	1	0	3	0	0	3	0	0	0	1	1
+15 mins.	0	1	0	0	1	0	0	0	0	0	0	2	1	0	3	1	0	0	0	1
+30 mins.	0	1	0	0	1	0	1	0	0	1	0	0	0	0	0	0	1	0	1	2
+45 mins.	0	0	0	0	0	1	0	0	0	1	0	1	0	0	1	0	0	0	0	0
Total Volume	0	2	0	0	2	2	1	0	0	3	0	6	1	0	7	1	1	0	2	4
% App. Total	0	100	0	0		66.7	33.3	0	0		0	85.7	14.3	0		25	25	0	50	
PHF	.000	.500	.000	.000	.500	.500	.250	.000	.000	.750	.000	.500	.250	.000	.583	.250	.250	.000	.500	.500

PASSENGER CAR EQUIVALENCY PEAK HOUR COUNT SUMMARY

INTERSECTION 17
Milliken Avenue (NS) / Arrow Highway (EW)

AM PEAK HOUR

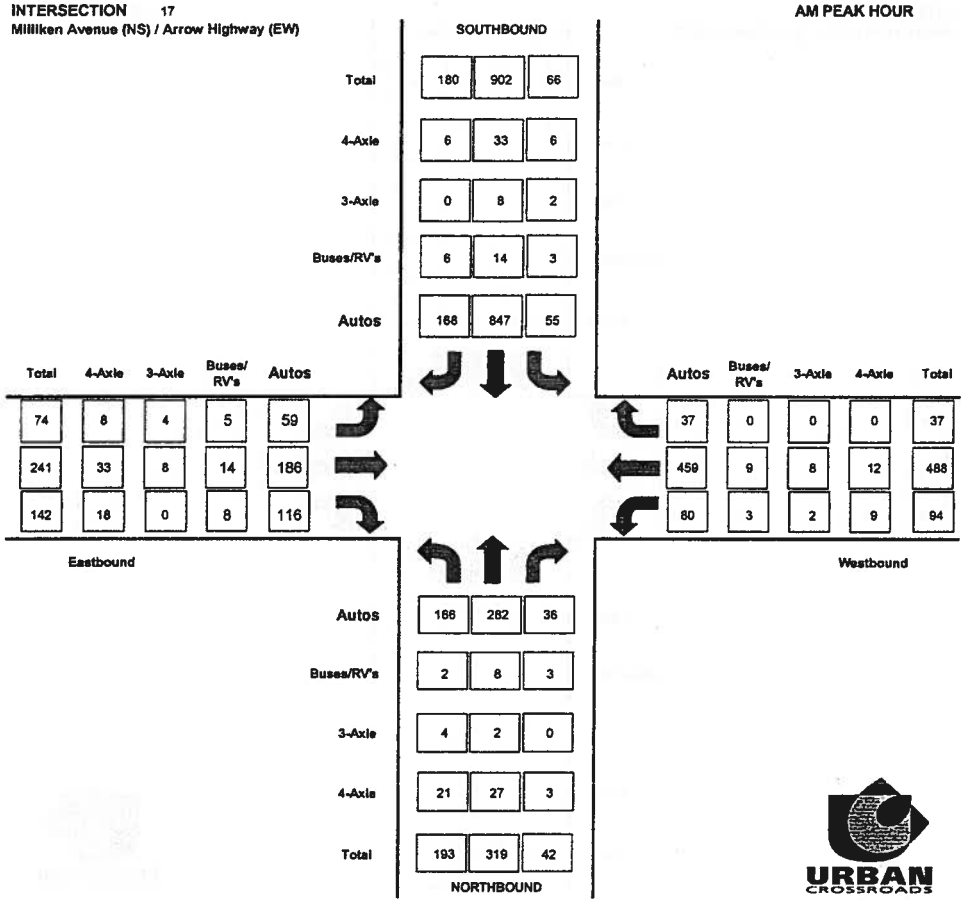

INTERSECTION 17
Milliken Avenue (NS) / Arrow Highway (EW)

PM PEAK HOUR

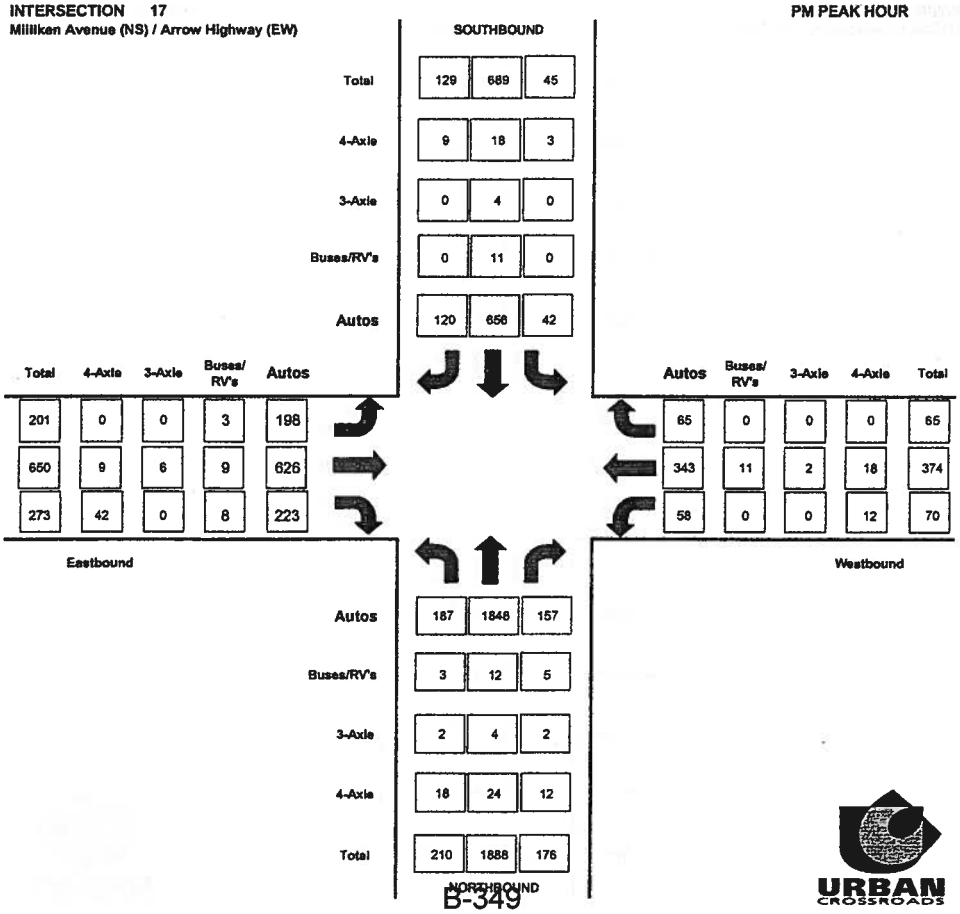

RAW PEAK HOUR COUNT SUMMARY

INTERSECTION 17
Milliken Avenue (NS) / Arrow Highway (EW)

AM PEAK HOUR

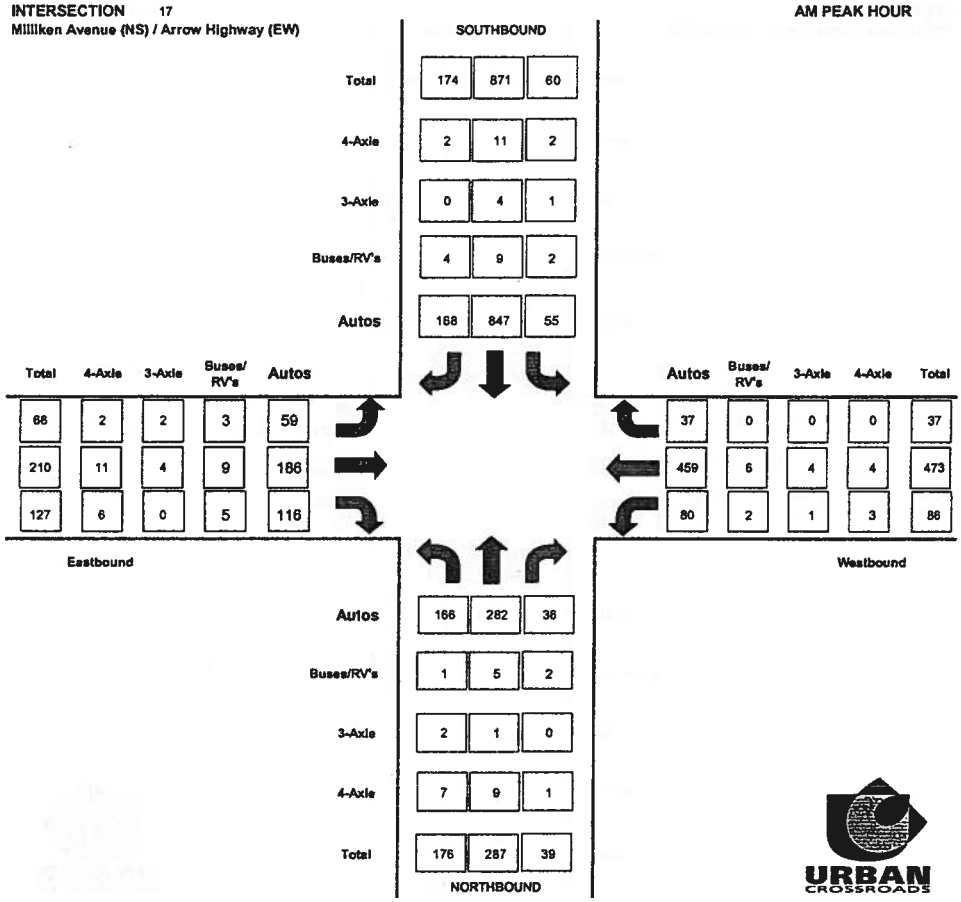

INTERSECTION 17
Milliken Avenue (NS) / Arrow Highway (EW)

PM PEAK HOUR

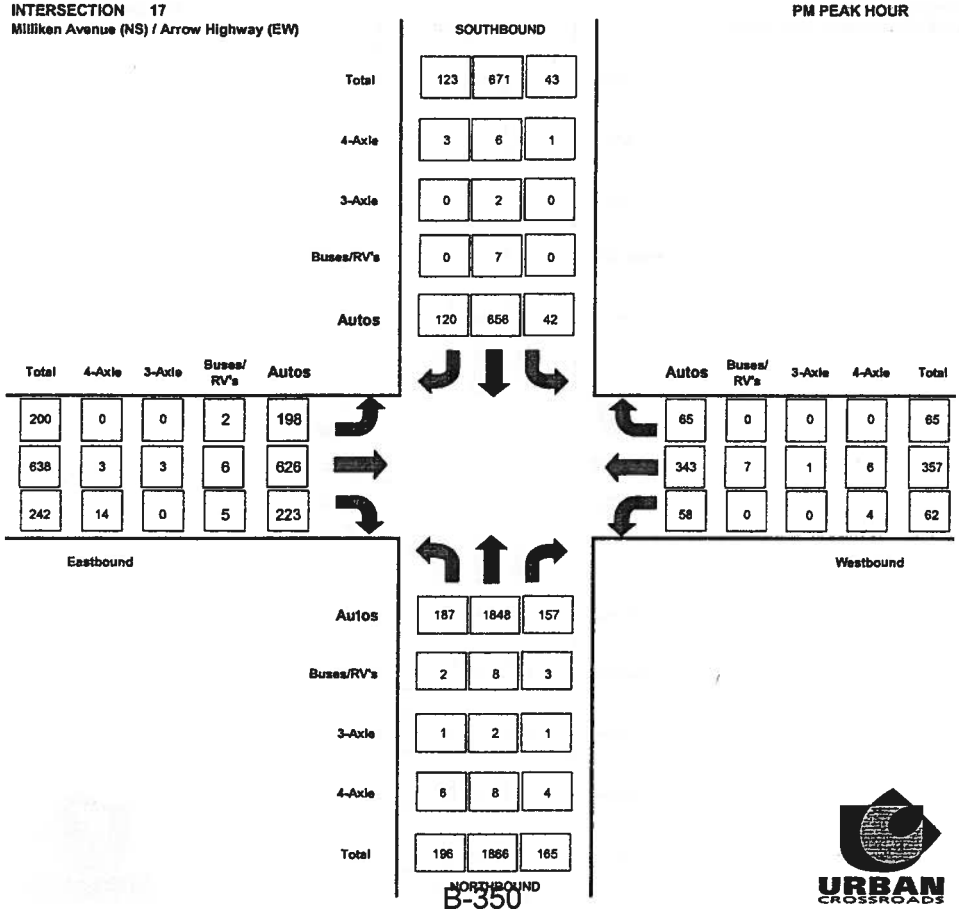

Counts Unlimited Inc.
25286 Jaclyn Avenue
Moreno Valley, CA 92557
951-485-7934

City of Rancho Cucamonga
N/S: Milliken Avenue
E/W: Arrow Highway
Weather: Sunny

File Name : RNCMIARAM
Site Code : 9150092
Start Date : 6/4/2009
Page No : 1

Groups Printed- Passenger Vehicles - Large 2 Axle Vehicles - 3 Axle Vehicles - 4+ Axle Trucks

	Milliken Avenue Southbound					Arrow Highway Westbound					Milliken Avenue Northbound					Arrow Highway Eastbound					
Start Time	Left	Thru	Right	RoR	App. Total	Left	Thru	Right	RoR	App. Total	Left	Thru	Right	RoR	App. Total	Left	Thru	Right	RoR	App. Total	Int. Total
07:00 AM	9	180	14	13	216	19	67	1	4	91	30	55	3	6	94	12	36	6	16	70	471
07:15 AM	13	211	17	16	257	29	101	1	4	135	32	47	5	7	91	15	39	6	10	70	553
07:30 AM	14	220	29	22	285	21	123	5	4	153	37	56	4	5	102	16	56	13	8	93	633
07:45 AM	19	251	30	13	313	28	139	4	7	178	49	77	3	8	137	14	64	12	14	104	732
Total	55	862	90	64	1071	97	430	11	19	557	148	235	15	26	424	57	195	37	48	337	2389
08:00 AM	18	227	26	15	286	15	120	2	10	147	48	79	7	3	137	19	46	16	23	104	674
08:15 AM	9	173	25	14	221	22	91	3	2	118	42	85	3	6	136	17	44	26	15	102	577
08:30 AM	4	181	27	7	219	13	102	3	0	118	37	93	5	8	143	25	48	20	26	119	599
08:45 AM	7	136	20	12	175	16	95	5	2	118	48	83	15	2	148	19	88	23	18	148	589
Total	38	717	98	48	901	66	408	13	14	501	175	340	30	19	564	80	226	85	82	473	2439
Grand Total	93	1579	188	112	1972	163	838	24	33	1058	323	575	45	45	988	137	421	122	130	810	4828
Apprch %	4.7	80.1	9.5	5.7		15.4	79.2	2.3	3.1		32.7	58.2	4.6	4.6		16.9	52	15.1	16		
Total %	1.9	32.7	3.9	2.3	40.8	3.4	17.4	0.5	0.7	21.9	6.7	11.9	0.9	0.9	20.5	2.8	8.7	2.5	2.7	16.8	
Passenger Vehicles		1526																			
% Passenger Vehicles	91.4	96.6	95.7	95.5	96.2	92.6	95.9	91.7	93.9	95.3	95	94.3	91.1	77.8	93.6	87.6	88.1	86.9	93.8	88.8	94.2
Large 2 Axle Vehicles																					
% Large 2 Axle Vehicles	2.2	1.5	1.1	4.5	1.7	3.1	1.8	8.3	3	2.2	0.9	2.3	4.4	11.1	2.3	6.6	5	5.7	3.8	5.2	2.5
3 Axle Vehicles																					
% 3 Axle Vehicles	2.2	0.5	0	0	0.5	0.6	1.2	0	3	1.1	0.6	0.7	0	4.4	0.8	2.9	1.9	1.6	0.8	1.9	0.9
4+ Axle Trucks	4	21	6	0	31	6	9	0	0	15	11	16	2	3	32	4	21	7	2	34	112
% 4+ Axle Trucks																					

	Milliken Avenue Southbound					Arrow Highway Westbound					Milliken Avenue Northbound					Arrow Highway Eastbound					
Start Time	Left	Thru	Right	RoR	App. Total	Left	Thru	Right	RoR	App. Total	Left	Thru	Right	RoR	App. Total	Left	Thru	Right	RoR	App. Total	Int. Total
Peak Hour Analysis From 07:00 AM to 08:45 AM - Peak 1 of 1																					
Peak Hour for Entire Intersection Begins at 07:30 AM																					
07:30 AM	14	220	29	**22**	285	21	123	**5**	4	153	37	56	4	5	102	16	56	13	8	93	633
07:45 AM	**19**	**251**	**30**	13	**313**	**28**	**139**	4	7	**178**	**49**	77	3	**8**	**137**	14	**64**	12	14	**104**	**732**
08:00 AM	18	227	26	15	286	15	120	2	**10**	147	48	79	7	3	137	**19**	46	16	**23**	104	674
08:15 AM	9	173	25	14	221	22	91	3	2	118	42	**85**	3	6	136	17	44	**26**	15	102	577
Total Volume	60	871	110	64	1105	86	473	14	23	596	176	297	17	22	512	66	210	67	60	403	2616
% App. Total	5.4	78.8	10	5.8		14.4	79.4	2.3	3.9		34.4	58	3.3	4.3		16.4	52.1	16.6	14.9		
PHF	.789	.868	.917	.727	.883	.768	.851	.700	.575	.837	.898	.874	.607	.688	.934	.868	.820	.644	.652	.969	.893

Counts Unlimited Inc.
25286 Jaclyn Avenue
Moreno Valley, CA 92557
951-485-7934

City of Rancho Cucamonga
N/S: Milliken Avenue
E/W: Arrow Highway
Weather: Sunny

File Name : RNCMIARAM
Site Code : 9150092
Start Date : 6/4/2009
Page No : 2

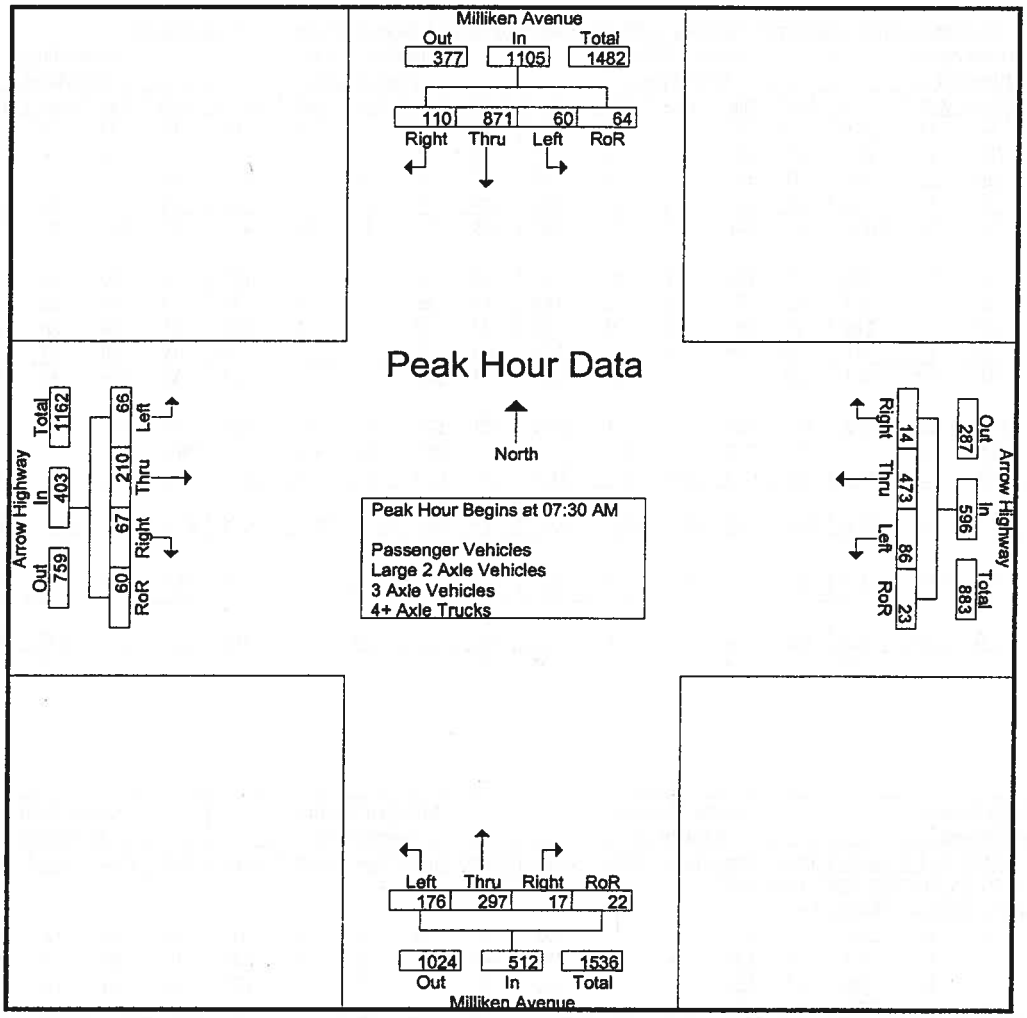

Peak Hour Analysis From 07:00 AM to 08:45 AM - Peak 1 of 1

Peak Hour for Each Approach Begins at:

	07:15 AM					07:15 AM					08:00 AM					08:00 AM				
+0 mins.	13	211	17	16	257	**29**	101	1	4	135	**48**	79	7	3	137	19	46	16	23	104
+15 mins.	14	220	29	**22**	285	21	123	**5**	4	153	42	85	3	6	136	17	44	**26**	15	102
+30 mins.	**19**	**251**	**30**	13	**313**	28	**139**	4	7	**178**	37	**93**	5	**8**	143	**25**	48	20	**26**	119
+45 mins.	18	227	26	15	286	15	120	2	**10**	147	48	83	**15**	2	**148**	19	**88**	23	18	**148**
Total Volume	64	909	102	66	1141	93	483	12	25	613	175	340	30	19	564	80	226	85	82	473
% App. Total	5.6	79.7	8.9	5.8		15.2	78.8	2	4.1		31	60.3	5.3	3.4		16.9	47.8	18	17.3	
PHF	.842	.905	.850	.750	.911	.802	.869	.600	.625	.861	.911	.914	.500	.594	.953	.800	.642	.817	.788	.799

Counts Unlimited Inc.
25286 Jaclyn Avenue
Moreno Valley, CA 92557
951-485-7934

City of Rancho Cucamonga
N/S: Milliken Avenue
E/W: Arrow Highway
Weather: Sunny

File Name : RNCMIARAM
Site Code : 9150092
Start Date : 6/4/2009
Page No : 1

Groups Printed- Passenger Vehicles

	Milliken Avenue Southbound					Arrow Highway Westbound					Milliken Avenue Northbound					Arrow Highway Eastbound					
Start Time	Left	Thru	Right	RoR	App. Total	Left	Thru	Right	RoR	App. Total	Left	Thru	Right	RoR	App. Total	Left	Thru	Right	RoR	App. Total	Int. Total
07:00 AM	8	176	14	13	211	19	61	1	4	85	28	50	3	4	85	11	35	4	14	64	445
07:15 AM	13	205	16	15	249	28	98	1	4	131	31	45	5	4	85	9	32	5	8	54	519
07:30 AM	13	216	28	21	278	21	122	5	4	152	36	52	4	5	97	16	52	12	8	88	615
07:45 AM	18	240	30	13	301	26	134	4	7	171	47	74	3	7	131	13	60	11	14	98	701
Total	52	837	88	62	1039	94	415	11	19	539	142	221	15	20	398	49	179	32	44	304	2280
08:00 AM	15	225	24	15	279	12	116	2	10	140	42	76	7	3	128	17	41	11	20	89	636
08:15 AM	9	166	25	12	212	21	87	3	2	113	41	80	1	6	128	13	33	25	15	86	539
08:30 AM	4	170	25	7	206	9	96	3	0	108	36	85	5	5	131	23	44	16	26	109	554
08:45 AM	5	128	18	11	162	15	90	3	0	108	46	80	13	1	140	18	74	22	17	131	541
Total	33	689	92	45	859	57	389	11	12	469	165	321	26	15	527	71	192	74	78	415	2270
Grand Total	85	1526	180	107	1898	151	804	22	31	1008	307	542	41	35	925	120	371	106	122	719	4550
Apprch %	4.5	80.4	9.5	5.6		15	79.8	2.2	3.1		33.2	58.6	4.4	3.8		16.7	51.6	14.7	17		
Total %	1.9	33.5	4	2.4	41.7	3.3	17.7	0.5	0.7	22.2	6.7	11.9	0.9	0.8	20.3	2.6	8.2	2.3	2.7	15.8	

	Milliken Avenue Southbound					Arrow Highway Westbound					Milliken Avenue Northbound					Arrow Highway Eastbound					
Start Time	Left	Thru	Right	RoR	App. Total		Thru	Right	RoR	App. Total		Thru	Right	RoR	App. Total		Thru	Right	RoR	App. Total	Int. Total
Peak Hour Analysis From 07:30 AM to 08:15 AM - Peak 1 of 1																					
Peak Hour for Entire Intersection Begins at 07:30 AM																					
07:30 AM	13	216	28	**21**	278	21	122	**5**	4	152	36	52	4	5	97	16	52	12	8	88	615
07:45 AM	**18**	**240**	**30**	13	**301**	**26**	**134**	4	7	**171**	**47**	74	3	**7**	**131**	13	**60**	11	14	**98**	**701**
08:00 AM	15	225	24	15	279	12	116	2	**10**	140	42	76	7	3	128	**17**	41	11	**20**	89	636
08:15 AM	9	166	25	12	212	21	87	3	2	113	41	**80**	1	6	128	13	33	**25**	15	86	539
Total Volume	55	847	107	61	1070	80	459	14	23	576	166	282	15	21	484	59	186	59	57	361	2491
% App. Total	5.1	79.2	10	5.7		13.9	79.7	2.4	4		34.3	58.3	3.1	4.3		16.3	51.5	16.3	15.8		
PHF	.764	.882	.892	.726	.889	.769	.856	.700	.575	.842	.883	.881	.536	.750	.924	.868	.775	.590	.713	.921	.888

Counts Unlimited Inc.
25286 Jaclyn Avenue
Moreno Valley, CA 92557
951-485-7934

City of Rancho Cucamonga
N/S: Milliken Avenue
E/W: Arrow Highway
Weather: Sunny

File Name : RNCMIARAM
Site Code : 9150092
Start Date : 6/4/2009
Page No : 2

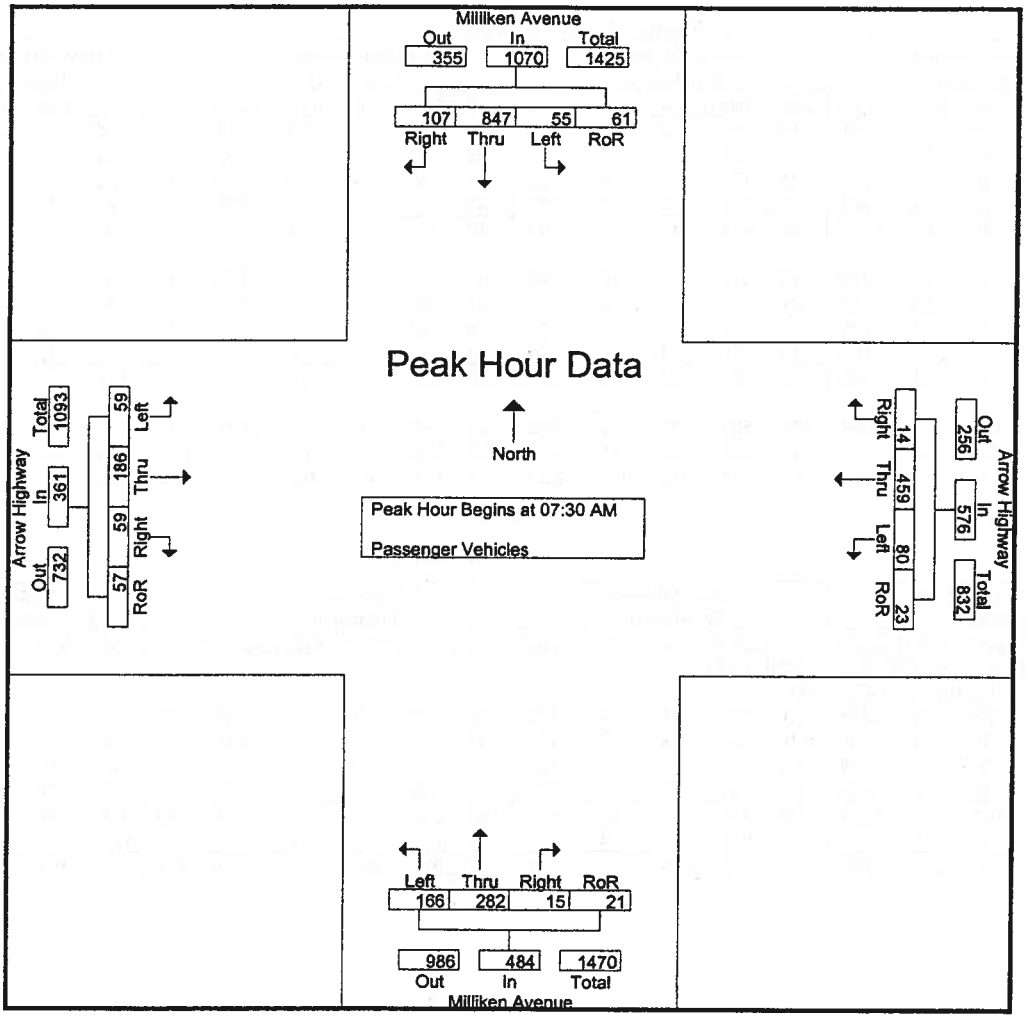

Peak Hour Analysis From 07:30 AM to 08:15 AM - Peak 1 of 1

Peak Hour for Each Approach Begins at:

	07:30 AM					07:30 AM					07:30 AM					07:30 AM				
+0 mins.	13	216	28	**21**	278	21	122	**5**	4	152	36	52	4	5	97	16	52	12	**8**	88
+15 mins.	**18**	**240**	**30**	13	**301**	**26**	**134**	4	7	**171**	**47**	74	3	7	**131**	13	**60**	11	14	**98**
+30 mins.	15	225	24	15	279	12	116	2	**10**	140	42	76	7	3	128	**17**	41	11	**20**	89
+45 mins.	9	166	25	12	212	21	87	3	2	113	41	**80**	1	6	128	13	33	**25**	15	86
Total Volume	55	847	107	61	1070	80	459	14	23	576	166	282	15	21	484	59	186	59	57	361
% App. Total	5.1	79.2	10	5.7		13.9	79.7	2.4	4		34.3	58.3	3.1	4.3		16.3	51.5	16.3	15.8	
PHF	.764	.882	.892	.726	.889	.769	.856	.700	.575	.842	.883	.881	.536	.750	.924	.868	.775	.590	.713	.921

Counts Unlimited Inc.
25286 Jaclyn Avenue
Moreno Valley, CA 92557
951-485-7934

City of Rancho Cucamonga
N/S: Milliken Avenue
E/W: Arrow Highway
Weather: Sunny

File Name : RNCMIARAM
Site Code : 9150092
Start Date : 6/4/2009
Page No : 1

Groups Printed- Large 2 Axle Vehicles

	Milliken Avenue Southbound					Arrow Highway Westbound					Milliken Avenue Northbound					Arrow Highway Eastbound					
Start Time	Left	Thru	Right	RoR	App. Total	Left	Thru	Right	RoR	App. Total	Left	Thru	Right	RoR	App. Total	Left	Thru	Right	RoR	App. Total	Int. Total
07:00 AM	0	2	0	0	2	0	1	0	0	1	0	3	0	1	4	1	0	1	2	4	11
07:15 AM	0	3	0	1	4	0	1	0	0	1	0	1	0	1	2	4	4	0	1	9	16
07:30 AM	1	1	1	1	4	0	1	0	0	1	0	3	0	0	3	0	2	0	0	2	10
07:45 AM	0	5	0	0	5	1	2	0	0	3	0	0	0	0	0	1	2	1	0	4	12
Total	1	11	1	2	15	1	5	0	0	6	0	7	0	2	9	6	8	2	3	19	49
08:00 AM	1	1	0	0	2	0	2	0	0	2	1	0	0	0	1	1	0	1	2	4	9
08:15 AM	0	2	0	2	4	1	1	0	0	2	0	2	2	0	4	1	5	1	0	7	17
08:30 AM	0	5	1	0	6	3	4	0	0	7	1	2	0	3	6	0	1	2	0	3	22
08:45 AM	0	5	0	1	6	0	3	2	1	6	1	2	0	0	3	1	7	1	0	9	24
Total	1	13	1	3	18	4	10	2	1	17	3	6	2	3	14	3	13	5	2	23	72
Grand Total	2	24	2	5	33	5	15	2	1	23	3	13	2	5	23	9	21	7	5	42	121
Apprch %	6.1	72.7	6.1	15.2		21.7	65.2	8.7	4.3		13	56.5	8.7	21.7		21.4	50	16.7	11.9		
Total %	1.7	19.8	1.7	4.1	27.3	4.1	12.4	1.7	0.8	19	2.5	10.7	1.7	4.1	19	7.4	17.4	5.8	4.1	34.7	

	Milliken Avenue Southbound					Arrow Highway Westbound					Milliken Avenue Northbound					Arrow Highway Eastbound					
Start Time	Left	Thru	Right	RoR	App. Total		Thru	Right	RoR	App. Total		Thru	Right	RoR	App. Total		Thru	Right	RoR	App. Total	Int. Total
Peak Hour Analysis From 07:30 AM to 08:15 AM - Peak 1 of 1																					
Peak Hour for Entire Intersection Begins at 07:30 AM																					
07:30 AM	1	1	1	1	4	0	1	0	0	1	0	3	0	0	3	0	2	0	0	2	10
07:45 AM	0	5	0	0	5	1	2	0	0	3	0	0	0	0	0	1	2	1	0	4	12
08:00 AM	1	1	0	0	2	0	2	0	0	2	1	0	0	0	1	1	0	1	2	4	9
08:15 AM	0	2	0	2	4	1	1	0	0	2	0	2	2	0	4	1	5	1	0	7	17
Total Volume	2	9	1	3	15	2	6	0	0	8	1	5	2	0	8	3	9	3	2	17	48
% App. Total	13.3	60	6.7	20		25	75	0	0		12.5	62.5	25	0		17.6	52.9	17.6	11.8		
PHF	.500	.450	.250	.375	.750	.500	.750	.000	.000	.667	.250	.417	.250	.000	.500	.750	.450	.750	.250	.607	.706

Counts Unlimited Inc.
25286 Jaclyn Avenue
Moreno Valley, CA 92557
951-485-7934

City of Rancho Cucamonga
N/S: Milliken Avenue
E/W: Arrow Highway
Weather: Sunny

File Name : RNCMIARAM
Site Code : 9150092
Start Date : 6/4/2009
Page No : 2

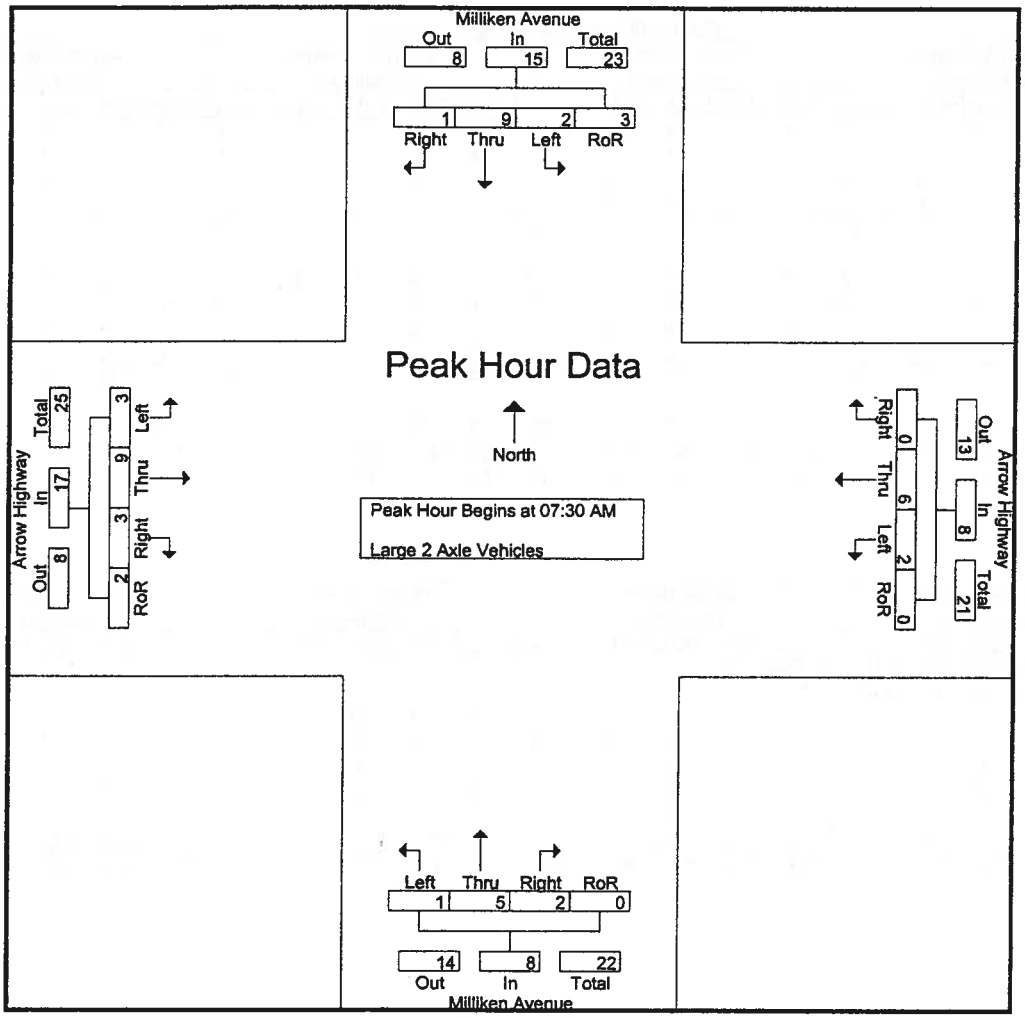

Peak Hour Analysis From 07:30 AM to 08:15 AM - Peak 1 of 1

Peak Hour for Each Approach Begins at:

	07:30 AM					07:30 AM					07:30 AM					07:30 AM				
+0 mins.	1	1	1	1	4	0	1	0	0	1	0	3	0	0	3	0	2	0	0	2
+15 mins.	0	5	0	0	5	1	2	0	0	3	0	0	0	0	0	1	2	1	0	4
+30 mins.	1	1	0	0	2	0	2	0	0	2	1	0	0	0	1	1	0	1	2	4
+45 mins.	0	2	0	2	4	1	1	0	0	2	0	2	2	0	4	1	5	1	0	7
Total Volume	2	9	1	3	15	2	6	0	0	8	1	5	2	0	8	3	9	3	2	17
% App. Total	13.3	60	6.7	20		25	75	0	0		12.5	62.5	25	0		17.6	52.9	17.6	11.8	
PHF	.500	.450	.250	.375	.750	.500	.750	.000	.000	.667	.250	.417	.250	.000	.500	.750	.450	.750	.250	.607

Counts Unlimited Inc.
25286 Jaclyn Avenue
Moreno Valley, CA 92557
951-485-7934

City of Rancho Cucamonga
N/S: Milliken Avenue
E/W: Arrow Highway
Weather: Sunny

File Name : RNCMIARAM
Site Code : 9150092
Start Date : 6/4/2009
Page No : 1

Groups Printed- 3 Axle Vehicles

	Milliken Avenue Southbound					Arrow Highway Westbound					Milliken Avenue Northbound					Arrow Highway Eastbound					
Start Time	Left	Thru	Right	RoR	App. Total	Left	Thru	Right	RoR	App. Total	Left	Thru	Right	RoR	App. Total	Left	Thru	Right	RoR	App. Total	Int. Total
07:00 AM	1	0	0	0	1	0	3	0	0	3	0	1	0	1	2	0	0	0	0	0	6
07:15 AM	0	2	0	0	2	0	1	0	0	1	0	0	0	0	0	1	2	1	0	4	7
07:30 AM	0	0	0	0	0	0	0	0	0	0	0	0	0	0	0	0	1	0	0	1	1
07:45 AM	0	0	0	0	0	0	1	0	0	1	1	0	0	0	1	0	1	0	0	1	3
Total	1	2	0	0	3	0	5	0	0	5	1	1	0	1	3	1	4	1	0	6	17
08:00 AM	1	1	0	0	2	1	2	0	0	3	1	1	0	0	2	1	1	0	0	2	9
08:15 AM	0	3	0	0	3	0	1	0	0	1	0	0	0	0	0	1	1	0	0	2	6
08:30 AM	0	2	0	0	2	0	1	0	0	1	0	1	0	0	1	1	0	1	0	2	6
08:45 AM	0	0	0	0	0	0	1	0	1	2	0	1	0	1	2	0	2	0	1	3	7
Total	1	6	0	0	7	1	5	0	1	7	1	3	0	1	5	3	4	1	1	9	28
Grand Total	2	8	0	0	10	1	10	0	1	12	2	4	0	2	8	4	8	2	1	15	45
Apprch %	20	80	0	0		8.3	83.3	0	8.3		25	50	0	25		26.7	53.3	13.3	6.7		
Total %	4.4	17.8	0	0	22.2	2.2	22.2	0	2.2	26.7	4.4	8.9	0	4.4	17.8	8.9	17.8	4.4	2.2	33.3	

	Milliken Avenue Southbound					Arrow Highway Westbound					Milliken Avenue Northbound					Arrow Highway Eastbound					
Start Time	Left	Thru	Right	RoR	App. Total		Thru	Right	RoR	App. Total		Thru	Right	RoR	App. Total		Thru	Right	RoR	App. Total	Int. Total
Peak Hour Analysis From 07:30 AM to 08:15 AM - Peak 1 of 1																					
Peak Hour for Entire Intersection Begins at 07:30 AM																					
07:30 AM	0	0	0	0	0	0	0	0	0	0	0	0	0	0	0	0	1	0	0	1	1
07:45 AM	0	0	0	0	0	0	1	0	0	1	1	0	0	0	1	0	1	0	0	1	3
08:00 AM	1	1	0	0	2	1	2	0	0	3	1	1	0	0	2	1	1	0	0	2	9
08:15 AM	0	3	0	0	3	0	1	0	0	1	0	0	0	0	0	1	1	0	0	2	6
Total Volume	1	4	0	0	5	1	4	0	0	5	2	1	0	0	3	2	4	0	0	6	19
% App. Total	20	80	0	0		20	80	0	0		66.7	33.3	0	0		33.3	66.7	0	0		
PHF	.250	.333	.000	.000	.417	.250	.500	.000	.000	.417	.500	.250	.000	.000	.375	.500	1.000	.000	.000	.750	.528

Counts Unlimited Inc.
25286 Jaclyn Avenue
Moreno Valley, CA 92557
951-485-7934

City of Rancho Cucamonga
N/S: Milliken Avenue
E/W: Arrow Highway
Weather: Sunny

File Name : RNCMIARAM
Site Code : 9150092
Start Date : 6/4/2009
Page No : 2

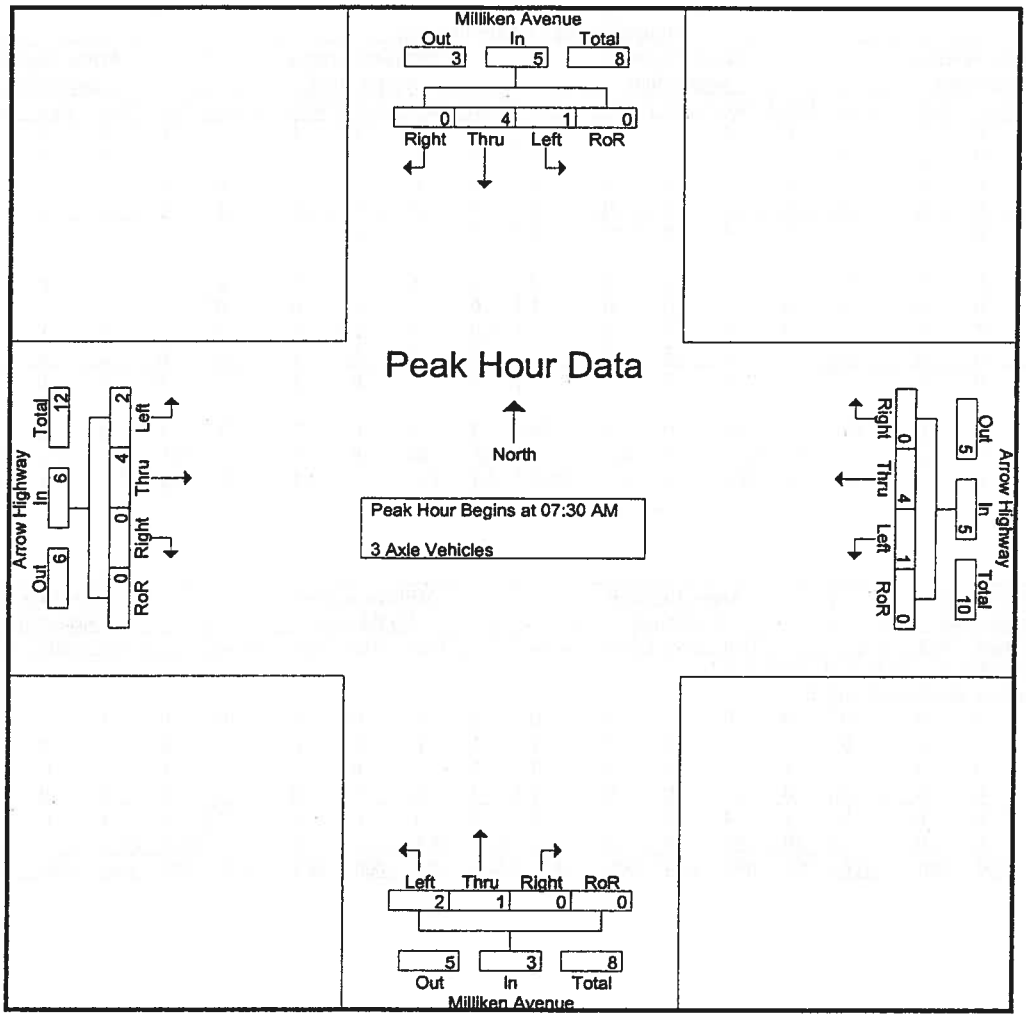

Peak Hour Analysis From 07:30 AM to 08:15 AM - Peak 1 of 1

Peak Hour for Each Approach Begins at:

	07:30 AM					07:30 AM					07:30 AM					07:30 AM				
+0 mins.	0	0	0	0	0	0	0	0	0	0	0	0	0	0	0	0	1	0	0	1
+15 mins.	0	0	0	0	0	0	1	0	0	1	1	0	0	0	1	0	1	0	0	1
+30 mins.	1	1	0	0	2	1	2	0	0	3	1	1	0	0	2	1	1	0	0	2
+45 mins.	0	3	0	0	3	0	1	0	0	1	0	0	0	0	0	1	1	0	0	2
Total Volume	1	4	0	0	5	1	4	0	0	5	2	1	0	0	3	2	4	0	0	6
% App. Total	20	80	0	0		20	80	0	0		66.7	33.3	0	0		33.3	66.7	0	0	
PHF	.250	.333	.000	.000	.417	.250	.500	.000	.000	.417	.500	.250	.000	.000	.375	.500	1.000	.000	.000	.750

Counts Unlimited Inc.
25286 Jaclyn Avenue
Moreno Valley, CA 92557
951-485-7934

City of Rancho Cucamonga
N/S: Milliken Avenue
E/W: Arrow Highway
Weather: Sunny

File Name : RNCMIARAM
Site Code : 9150092
Start Date : 6/4/2009
Page No : 1

Groups Printed- 4+ Axle Trucks

	Milliken Avenue Southbound					Arrow Highway Westbound					Milliken Avenue Northbound					Arrow Highway Eastbound					
Start Time	Left	Thru	Right	RoR	App. Total	Left	Thru	Right	RoR	App. Total	Left	Thru	Right	RoR	App. Total	Left	Thru	Right	RoR	App. Total	Int. Total
07:00 AM	0	2	0	0	2	0	2	0	0	2	2	1	0	0	3	0	1	1	0	2	9
07:15 AM	0	1	1	0	2	1	1	0	0	2	1	1	0	2	4	1	1	0	1	3	11
07:30 AM	0	3	0	0	3	0	0	0	0	0	1	1	0	0	2	0	1	1	0	2	7
07:45 AM	1	6	0	0	7	1	2	0	0	3	1	3	0	1	5	0	1	0	0	1	16
Total	1	12	1	0	14	2	5	0	0	7	5	6	0	3	14	1	4	2	1	8	43
08:00 AM	1	0	2	0	3	2	0	0	0	2	4	2	0	0	6	0	4	4	1	9	20
08:15 AM	0	2	0	0	2	0	2	0	0	2	1	3	0	0	4	2	5	0	0	7	15
08:30 AM	0	4	1	0	5	1	1	0	0	2	0	5	0	0	5	1	3	1	0	5	17
08:45 AM	2	3	2	0	7	1	1	0	0	2	1	0	2	0	3	0	5	0	0	5	17
Total	3	9	5	0	17	4	4	0	0	8	6	10	2	0	18	3	17	5	1	26	69
Grand Total	4	21	6	0	31	6	9	0	0	15	11	16	2	3	32	4	21	7	2	34	112
Apprch %	12.9	67.7	19.4	0		40	60	0	0		34.4	50	6.2	9.4		11.8	61.8	20.6	5.9		
Total %	3.6	18.8	5.4	0	27.7	5.4	8	0	0	13.4	9.8	14.3	1.8	2.7	28.6	3.6	18.8	6.2	1.8	30.4	

	Milliken Avenue Southbound					Arrow Highway Westbound					Milliken Avenue Northbound					Arrow Highway Eastbound					
Start Time	Left	Thru	Right	RoR	App. Total		Thru	Right	RoR	App. Total		Thru	Right	RoR	App. Total		Thru	Right	RoR	App. Total	Int. Total
Peak Hour Analysis From 07:30 AM to 08:15 AM - Peak 1 of 1																					
Peak Hour for Entire Intersection Begins at 07:30 AM																					
07:30 AM	0	3	0	0	3	0	0	0	0	0	1	1	0	0	2	0	1	1	0	2	7
07:45 AM	1	6	0	0	7	1	2	0	0	3	1	3	0	1	5	0	1	0	0	1	16
08:00 AM	1	0	2	0	3	2	0	0	0	2	4	2	0	0	6	0	4	4	1	9	20
08:15 AM	0	2	0	0	2	0	2	0	0	2	1	3	0	0	4	2	5	0	0	7	15
Total Volume	2	11	2	0	15	3	4	0	0	7	7	9	0	1	17	2	11	5	1	19	58
% App. Total	13.3	73.3	13.3	0		42.9	57.1	0	0		41.2	52.9	0	5.9		10.5	57.9	26.3	5.3		
PHF	.500	.458	.250	.000	.536	.375	.500	.000	.000	.583	.438	.750	.000	.250	.708	.250	.550	.313	.250	.528	.725

Counts Unlimited Inc.
25286 Jaclyn Avenue
Moreno Valley, CA 92557
951-485-7934

City of Rancho Cucamonga
N/S: Milliken Avenue
E/W: Arrow Highway
Weather: Sunny

File Name : RNCMIARAM
Site Code : 9150092
Start Date : 6/4/2009
Page No : 2

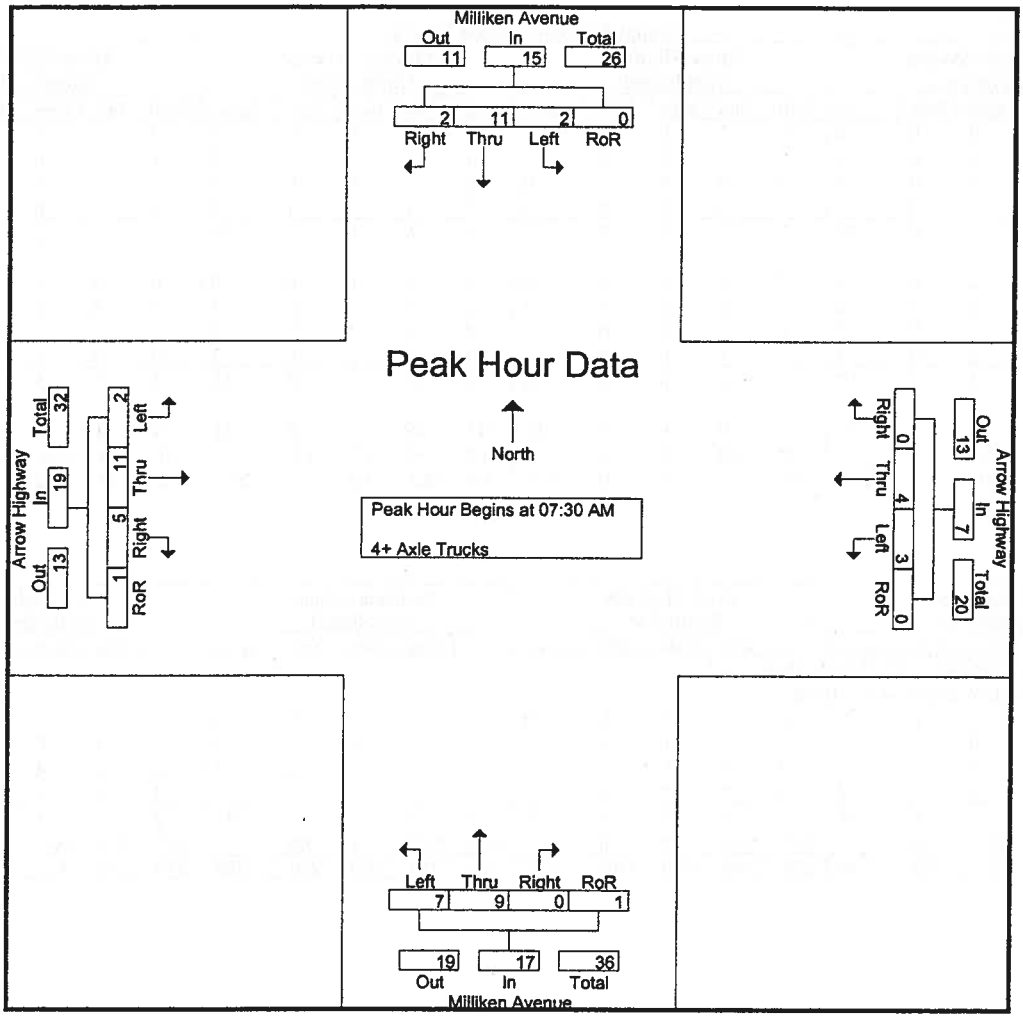

Peak Hour Analysis From 07:30 AM to 08:15 AM - Peak 1 of 1

Peak Hour for Each Approach Begins at:

	07:30 AM					07:30 AM					07:30 AM					07:30 AM				
+0 mins.	0	3	0	0	3	0	0	0	0	0	1	1	0	0	2	0	1	1	0	2
+15 mins.	1	6	0	0	7	1	2	0	0	3	1	3	0	1	5	0	1	0	0	1
+30 mins.	1	0	2	0	3	2	0	0	0	2	4	2	0	0	6	0	4	4	1	9
+45 mins.	0	2	0	0	2	0	2	0	0	2	1	3	0	0	4	2	5	0	0	7
Total Volume	2	11	2	0	15	3	4	0	0	7	7	9	0	1	17	2	11	5	1	19
% App. Total	13.3	73.3	13.3	0		42.9	57.1	0	0		41.2	52.9	0	5.9		10.5	57.9	26.3	5.3	
PHF	.500	.458	.250	.000	.536	.375	.500	.000	.000	.583	.438	.750	.000	.250	.708	.250	.550	.313	.250	.528

Counts Unlimited Inc.
25286 Jaclyn Avenue
Moreno Valley, CA 92557
951-485-7934

City of Rancho Cucamonga
N/S: Milliken Avenue
E/W: Arrow Highway
Weather: Sunny

File Name : RNCMIARPM
Site Code : 9150092
Start Date : 6/4/2009
Page No : 1

Groups Printed- Passenger Vehicles - Large 2 Axle Vehicles - 3 Axle Vehicles - 4+ Axle Trucks

	Milliken Avenue Southbound					Arrow Highway Westbound					Milliken Avenue Northbound					Arrow Highway Eastbound					
Start Time	Left	Thru	Right	RoR	App. Total	Left	Thru	Right	RoR	App. Total	Left	Thru	Right	RoR	App. Total	Left	Thru	Right	RoR	App. Total	Int. Total
04:00 PM	23	156	16	12	207	14	78	4	10	106	41	303	11	17	372	33	120	21	26	200	885
04:15 PM	11	162	14	11	198	15	88	8	8	119	43	328	21	6	398	47	131	23	34	235	950
04:30 PM	6	145	13	13	177	25	79	10	8	122	58	357	24	15	454	42	167	30	24	263	1016
04:45 PM	8	188	18	19	233	25	97	8	8	138	48	419	25	13	505	51	161	30	32	274	1150
Total	48	651	61	55	815	79	342	30	34	485	190	1407	81	51	1729	173	579	104	116	972	4001
05:00 PM	12	157	16	16	201	7	88	3	7	105	45	503	32	14	594	47	187	38	38	310	1210
05:15 PM	8	176	19	12	215	23	84	17	11	135	53	441	27	8	529	54	170	21	29	274	1153
05:30 PM	15	150	12	11	188	7	88	7	4	106	50	503	35	11	599	48	120	23	31	222	1115
05:45 PM	11	157	10	12	190	21	68	3	4	96	41	425	30	9	505	44	113	25	13	195	986
Total	46	640	57	51	794	58	328	30	26	442	189	1872	124	42	2227	193	590	107	111	1001	4464
Grand Total	94	1291	118	106	1609	137	670	60	60	927	379	3279	205	93	3956	366	1169	211	227	1973	8465
Apprch %	5.8	80.2	7.3	6.6		14.8	72.3	6.5	6.5		9.6	82.9	5.2	2.4		18.6	59.2	10.7	11.5		
Total %	1.1	15.3	1.4	1.3	19	1.6	7.9	0.7	0.7	11	4.5	38.7	2.4	1.1	46.7	4.3	13.8	2.5	2.7	23.3	
Passenger Vehicles		1262										3237					1131				
% Passenger Vehicles	94.7	97.8	94.9	100	97.5	93.4	95.7	95	100	95.6	93.1	98.7	94.6	92.5	97.8	98.1	96.7	86.7	93.8	95.6	97
Large 2 Axle Vehicles																					
% Large 2 Axle Vehicles	2.1	1	1.7	0	1.1	0	1.9	3.3	0	1.6	1.3	0.7	2.4	2.2	0.9	1.4	0.9	3.3	1.8	1.4	1.1
3 Axle Vehicles	0	3	0	0	3	0	5	1	0	6	6	2	2	1	11	0	19	0	0	19	39
% 3 Axle Vehicles	0	0.2	0	0	0.2	0	0.7	1.7	0	0.6	1.6	0.1	1	1.1	0.3	0	1.6	0	0	1	0.5
4+ Axle Trucks	3	13	4	0	20	9	11	0	0	20	15	16	4	4	39	2	8	21	10	41	120
% 4+ Axle Trucks																					

	Milliken Avenue Southbound					Arrow Highway Westbound					Milliken Avenue Northbound					Arrow Highway Eastbound					
Start Time	Left	Thru	Right	RoR	App. Total	Left	Thru	Right	RoR	App. Total	Left	Thru	Right	RoR	App. Total	Left	Thru	Right	RoR	App. Total	Int. Total
Peak Hour Analysis From 04:00 PM to 05:45 PM - Peak 1 of 1																					
Peak Hour for Entire Intersection Begins at 04:45 PM																					
04:45 PM	8	**188**	18	**19**	**233**	**25**	**97**	8	8	**138**	48	419	25	13	505	51	161	30	32	274	1150
05:00 PM	12	157	16	16	201	7	88	3	7	105	45	**503**	32	**14**	594	47	**187**	**38**	**38**	**310**	**1210**
05:15 PM	8	176	**19**	12	215	23	84	**17**	**11**	135	**53**	441	27	8	529	**54**	170	21	29	274	1153
05:30 PM	15	150	12	11	188	7	88	7	4	106	50	503	**35**	11	**599**	48	120	23	31	222	1115
Total Volume	43	671	65	58	837	62	357	35	30	484	196	1866	119	46	2227	200	638	112	130	1080	4628
% App. Total	5.1	80.2	7.8	6.9		12.8	73.8	7.2	6.2		8.8	83.8	5.3	2.1		18.5	59.1	10.4	12		
PHF	.717	.892	.855	.763	.898	.620	.920	.515	.682	.877	.925	.927	.850	.821	.929	.926	.853	.737	.855	.871	.956

Counts Unlimited Inc.
25286 Jaclyn Avenue
Moreno Valley, CA 92557
951-485-7934

City of Rancho Cucamonga
N/S: Milliken Avenue
E/W: Arrow Highway
Weather: Sunny

File Name : RNCMIARPM
Site Code : 9150092
Start Date : 6/4/2009
Page No : 2

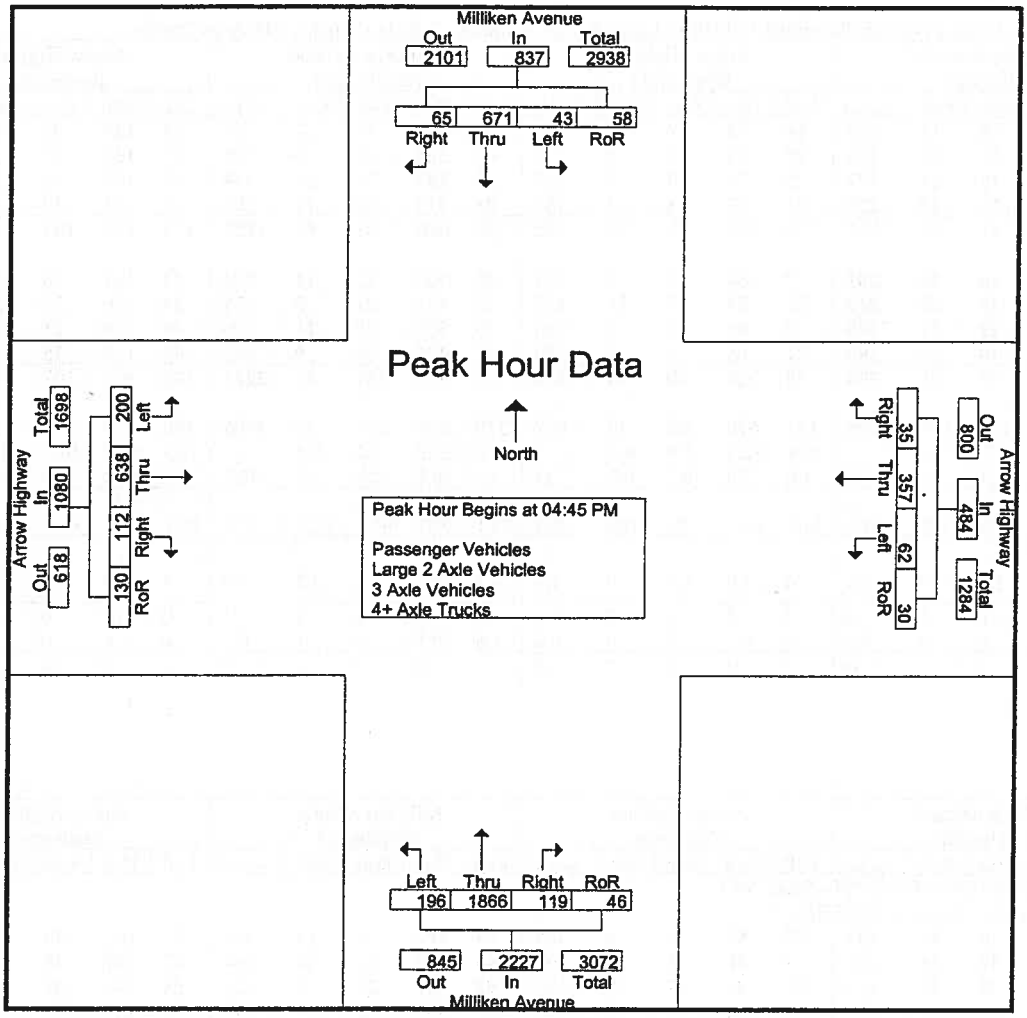

Peak Hour Analysis From 04:00 PM to 05:45 PM - Peak 1 of 1

Peak Hour for Each Approach Begins at:

	04:45 PM					04:30 PM					04:45 PM					04:30 PM				
+0 mins.	8	**188**	18	**19**	**233**	**25**	79	10	8	122	48	419	25	13	505	42	167	30	24	263
+15 mins.	12	157	16	16	201	**25**	**97**	8	8	**138**	45	**503**	32	**14**	594	51	161	30	32	274
+30 mins.	8	176	**19**	12	215	7	88	3	7	105	**53**	441	27	8	529	47	**187**	**38**	**38**	**310**
+45 mins.	**15**	150	12	11	188	23	84	**17**	**11**	135	50	503	**35**	11	**599**	**54**	170	21	29	274
Total Volume	43	671	65	58	837	80	348	38	34	500	196	1866	119	46	2227	194	685	119	123	1121
% App. Total	5.1	80.2	7.8	6.9		16	69.6	7.6	6.8		8.8	83.8	5.3	2.1		17.3	61.1	10.6	11	
PHF	.717	.892	.855	.763	.898	.800	.897	.559	.773	.906	.925	.927	.850	.821	.929	.898	.916	.783	.809	.904

Counts Unlimited Inc.
25286 Jaclyn Avenue
Moreno Valley, CA 92557
951-485-7934

City of Rancho Cucamonga
N/S: Milliken Avenue
E/W: Arrow Highway
Weather: Sunny

File Name : RNCMIARPM
Site Code : 9150092
Start Date : 6/4/2009
Page No : 1

Groups Printed- Passenger Vehicles

	Milliken Avenue Southbound					Arrow Highway Westbound					Milliken Avenue Northbound					Arrow Highway Eastbound					
Start Time	Left	Thru	Right	RoR	App. Total	Left	Thru	Right	RoR	App. Total	Left	Thru	Right	RoR	App. Total	Left	Thru	Right	RoR	App. Total	Int. Total
04:00 PM	21	152	14	12	199	14	76	4	10	104	34	299	11	17	361	32	116	20	22	190	854
04:15 PM	10	157	13	11	191	12	82	6	8	108	38	318	21	3	380	46	117	20	32	215	894
04:30 PM	6	144	13	13	176	24	76	9	8	117	55	350	20	14	439	41	161	23	23	248	980
04:45 PM	8	182	16	19	225	25	95	8	8	136	47	413	23	12	495	51	156	25	30	262	1118
Total	45	635	56	55	791	75	329	27	34	465	174	1380	75	46	1675	170	550	88	107	915	3846
05:00 PM	12	156	16	16	200	5	86	3	7	101	42	497	31	13	583	47	183	38	37	305	1189
05:15 PM	8	169	18	12	207	22	78	17	11	128	51	437	26	8	522	54	168	20	27	269	1126
05:30 PM	14	149	12	11	186	6	84	7	4	101	47	501	34	10	592	46	119	17	29	211	1090
05:45 PM	10	153	10	12	185	20	64	3	4	91	39	422	28	9	498	42	111	20	13	186	960
Total	44	627	56	51	778	53	312	30	26	421	179	1857	119	40	2195	189	581	95	106	971	4365
Grand Total	89	1262	112	106	1569	128	641	57	60	886	353	3237	194	86	3870	359	1131	183	213	1886	8211
Apprch %	5.7	80.4	7.1	6.8		14.4	72.3	6.4	6.8		9.1	83.6	5	2.2		19	60	9.7	11.3		
Total %	1.1	15.4	1.4	1.3	19.1	1.6	7.8	0.7	0.7	10.8	4.3	39.4	2.4	1	47.1	4.4	13.8	2.2	2.6	23	

	Milliken Avenue Southbound					Arrow Highway Westbound					Milliken Avenue Northbound					Arrow Highway Eastbound					
Start Time	Left	Thru	Right	RoR	App. Total		Thru	Right	RoR	App. Total		Thru	Right	RoR	App. Total		Thru	Right	RoR	App. Total	Int. Total
Peak Hour Analysis From 04:45 PM to 05:30 PM - Peak 1 of 1																					
Peak Hour for Entire Intersection Begins at 04:45 PM																					
04:45 PM	8	**182**	16	**19**	**225**	**25**	**95**	8	8	**136**	47	413	23	12	495	51	156	25	30	262	1118
05:00 PM	12	156	16	16	200	5	86	3	7	101	42	497	31	**13**	583	47	**183**	**38**	**37**	**305**	**1189**
05:15 PM	8	169	**18**	12	207	22	78	**17**	**11**	128	**51**	437	26	8	522	54	168	20	27	269	1126
05:30 PM	**14**	149	12	11	186	6	84	7	4	101	47	**501**	**34**	10	**592**	46	119	17	29	211	1090
Total Volume	42	656	62	58	818	58	343	35	30	466	187	1848	114	43	2192	198	626	100	123	1047	4523
% App. Total	5.1	80.2	7.6	7.1		12.4	73.6	7.5	6.4		8.5	84.3	5.2	2		18.9	59.8	9.6	11.7		
PHF	.750	.901	.861	.763	.909	.580	.903	.515	.682	.857	.917	.922	.838	.827	.926	.917	.855	.658	.831	.858	.951

Counts Unlimited Inc.
25286 Jaclyn Avenue
Moreno Valley, CA 92557
951-485-7934

City of Rancho Cucamonga
N/S: Milliken Avenue
E/W: Arrow Highway
Weather: Sunny

File Name : RNCMIARPM
Site Code : 9150092
Start Date : 6/4/2009
Page No : 2

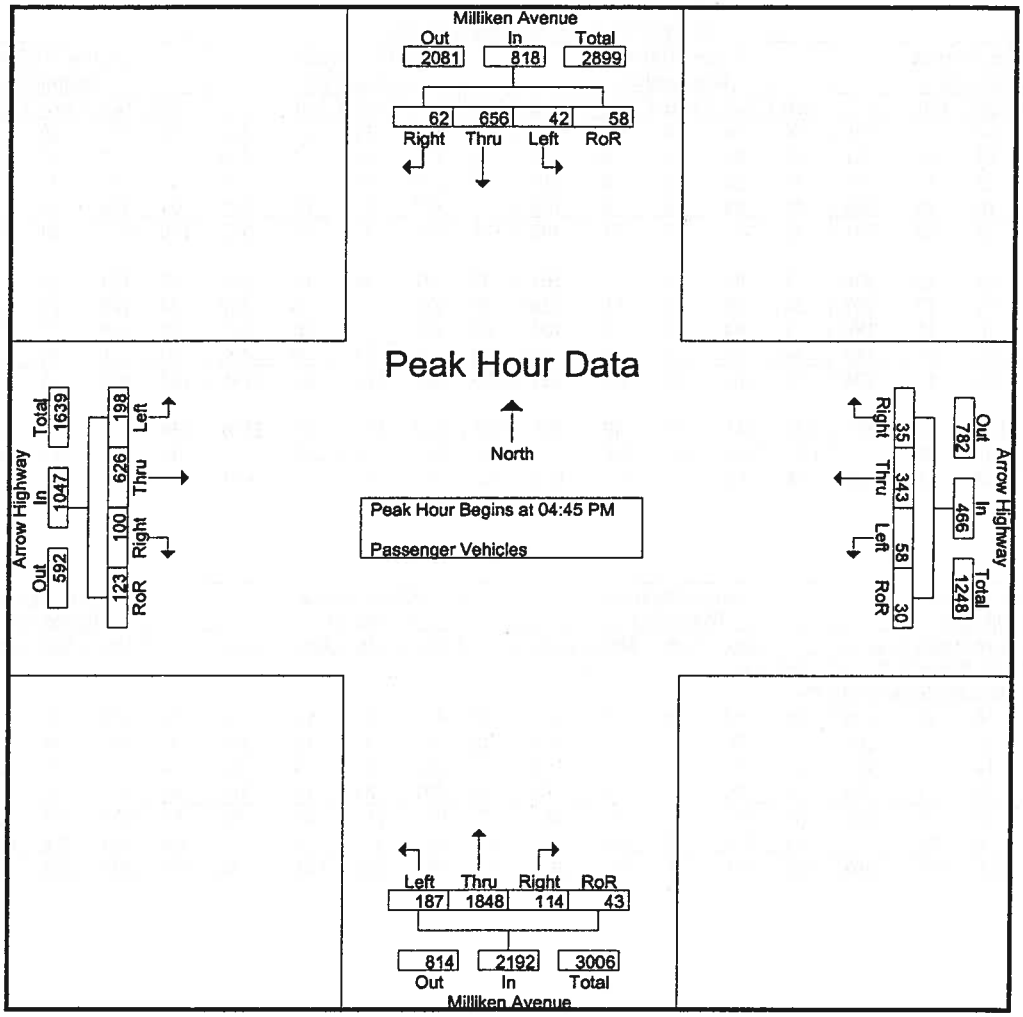

Peak Hour Analysis From 04:45 PM to 05:30 PM - Peak 1 of 1

Peak Hour for Each Approach Begins at:

	04:45 PM					04:45 PM					04:45 PM					04:45 PM				
+0 mins.	8	**182**	16	**19**	**225**	**25**	**95**	8	8	**136**	47	413	23	12	495	51	156	25	30	262
+15 mins.	12	156	16	16	200	5	86	3	7	101	42	497	31	**13**	583	47	**183**	**38**	**37**	**305**
+30 mins.	8	169	**18**	12	207	22	78	**17**	**11**	128	**51**	437	26	8	522	**54**	168	20	27	269
+45 mins.	**14**	149	12	11	186	6	84	7	4	101	47	**501**	**34**	10	**592**	46	119	17	29	211
Total Volume	42	656	62	58	818	58	343	35	30	466	187	1848	114	43	2192	198	626	100	123	1047
% App. Total	5.1	80.2	7.6	7.1		12.4	73.6	7.5	6.4		8.5	84.3	5.2	2		18.9	59.8	9.6	11.7	
PHF	.750	.901	.861	.763	.909	.580	.903	.515	.682	.857	.917	.922	.838	.827	.926	.917	.855	.658	.831	.858

Counts Unlimited Inc.
25286 Jaclyn Avenue
Moreno Valley, CA 92557
951-485-7934

City of Rancho Cucamonga
N/S: Milliken Avenue
E/W: Arrow Highway
Weather: Sunny

File Name : RNCMIARPM
Site Code : 9150092
Start Date : 6/4/2009
Page No : 1

Groups Printed- Large 2 Axle Vehicles

	Milliken Avenue Southbound					Arrow Highway Westbound					Milliken Avenue Northbound					Arrow Highway Eastbound					
Start Time	Left	Thru	Right	RoR	App. Total	Left	Thru	Right	RoR	App. Total	Left	Thru	Right	RoR	App. Total	Left	Thru	Right	RoR	App. Total	Int. Total
04:00 PM	2	1	2	0	5	0	1	0	0	1	0	4	0	0	4	1	0	1	0	2	12
04:15 PM	0	3	0	0	3	0	2	1	0	3	1	7	0	2	10	0	5	1	2	8	24
04:30 PM	0	0	0	0	0	0	1	1	0	2	1	3	1	0	5	1	0	1	1	3	10
04:45 PM	0	1	0	0	1	0	1	0	0	1	1	3	2	0	6	0	4	1	0	5	13
Total	2	5	2	0	9	0	5	2	0	7	3	17	3	2	25	2	9	4	3	18	59
05:00 PM	0	0	0	0	0	0	1	0	0	1	0	3	1	0	4	0	1	0	0	1	6
05:15 PM	0	5	0	0	5	0	3	0	0	3	0	1	0	0	1	0	0	0	0	0	9
05:30 PM	0	1	0	0	1	0	2	0	0	2	1	1	0	0	2	2	1	3	1	7	12
05:45 PM	0	2	0	0	2	0	2	0	0	2	1	2	1	0	4	1	0	0	0	1	9
Total	0	8	0	0	8	0	8	0	0	8	2	7	2	0	11	3	2	3	1	9	36
Grand Total	2	13	2	0	17	0	13	2	0	15	5	24	5	2	36	5	11	7	4	27	95
Apprch %	11.8	76.5	11.8	0		0	86.7	13.3	0		13.9	66.7	13.9	5.6		18.5	40.7	25.9	14.8		
Total %	2.1	13.7	2.1	0	17.9	0	13.7	2.1	0	15.8	5.3	25.3	5.3	2.1	37.9	5.3	11.6	7.4	4.2	28.4	

	Milliken Avenue Southbound					Arrow Highway Westbound					Milliken Avenue Northbound					Arrow Highway Eastbound					
Start Time	Left	Thru	Right	RoR	App. Total		Thru	Right	RoR	App. Total		Thru	Right	RoR	App. Total		Thru	Right	RoR	App. Total	Int. Total
Peak Hour Analysis From 04:45 PM to 05:30 PM - Peak 1 of 1																					
Peak Hour for Entire Intersection Begins at 04:45 PM																					
04:45 PM	0	1	0	0	1	0	1	0	0	1	1	3	2	0	6	0	4	1	0	5	13
05:00 PM	0	0	0	0	0	0	1	0	0	1	0	3	1	0	4	0	1	0	0	1	6
05:15 PM	0	5	0	0	5	0	3	0	0	3	0	1	0	0	1	0	0	0	0	0	9
05:30 PM	0	1	0	0	1	0	2	0	0	2	1	1	0	0	2	2	1	3	1	7	12
Total Volume	0	7	0	0	7	0	7	0	0	7	2	8	3	0	13	2	6	4	1	13	40
% App. Total	0	100	0	0		0	100	0	0		15.4	61.5	23.1	0		15.4	46.2	30.8	7.7		
PHF	.000	.350	.000	.000	.350	.000	.583	.000	.000	.583	.500	.667	.375	.000	.542	.250	.375	.333	.250	.464	.769

Counts Unlimited Inc.
25286 Jaclyn Avenue
Moreno Valley, CA 92557
951-485-7934

City of Rancho Cucamonga
N/S: Milliken Avenue
E/W: Arrow Highway
Weather: Sunny

File Name : RNCMIARPM
Site Code : 9150092
Start Date : 6/4/2009
Page No : 2

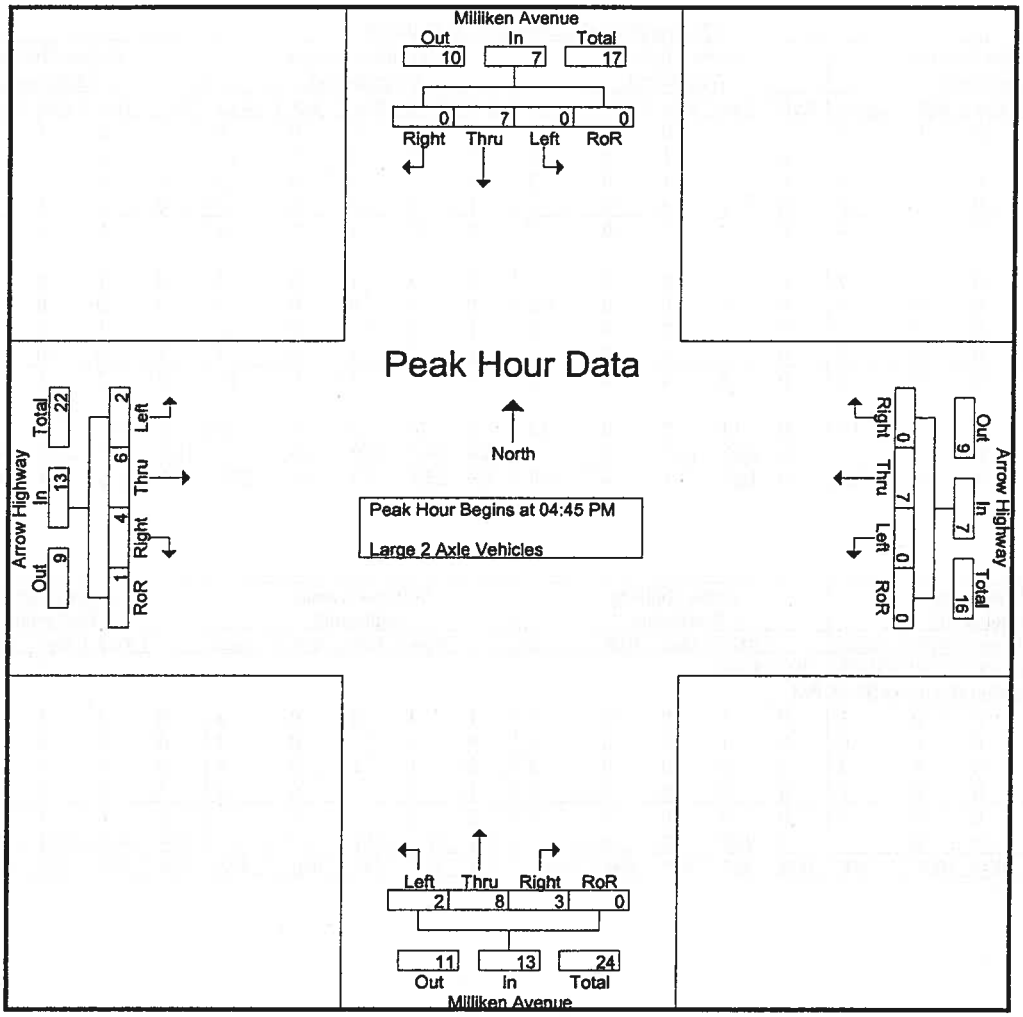

Peak Hour Analysis From 04:45 PM to 05:30 PM - Peak 1 of 1

Peak Hour for Each Approach Begins at:

	04:45 PM					04:45 PM					04:45 PM					04:45 PM				
+0 mins.	0	1	0	0	1	0	1	0	0	1	1	3	2	0	6	0	4	1	0	5
+15 mins.	0	0	0	0	0	0	1	0	0	1	0	3	1	0	4	0	1	0	0	1
+30 mins.	0	5	0	0	5	0	3	0	0	3	0	1	0	0	1	0	0	0	0	0
+45 mins.	0	1	0	0	1	0	2	0	0	2	1	1	0	0	2	2	1	3	1	7
Total Volume	0	7	0	0	7	0	7	0	0	7	2	8	3	0	13	2	6	4	1	13
% App. Total	0	100	0	0		0	100	0	0		15.4	61.5	23.1	0		15.4	46.2	30.8	7.7	
PHF	.000	.350	.000	.000	.350	.000	.583	.000	.000	.583	.500	.667	.375	.000	.542	.250	.375	.333	.250	.464

Counts Unlimited Inc.
25286 Jaclyn Avenue
Moreno Valley, CA 92557
951-485-7934

City of Rancho Cucamonga
N/S: Milliken Avenue
E/W: Arrow Highway
Weather: Sunny

File Name : RNCMIARPM
Site Code : 9150092
Start Date : 6/4/2009
Page No : 1

Groups Printed- 3 Axle Vehicles

	Milliken Avenue Southbound					Arrow Highway Westbound					Milliken Avenue Northbound					Arrow Highway Eastbound					
Start Time	Left	Thru	Right	RoR	App. Total	Left	Thru	Right	RoR	App. Total	Left	Thru	Right	RoR	App. Total	Left	Thru	Right	RoR	App. Total	Int. Total
04:00 PM	0	1	0	0	1	0	1	0	0	1	1	0	0	0	1	0	3	0	0	3	6
04:15 PM	0	0	0	0	0	0	1	1	0	2	1	0	0	0	1	0	7	0	0	7	10
04:30 PM	0	0	0	0	0	0	1	0	0	1	2	0	1	1	4	0	5	0	0	5	10
04:45 PM	0	1	0	0	1	0	0	0	0	0	0	1	0	0	1	0	1	0	0	1	3
Total	0	2	0	0	2	0	3	1	0	4	4	1	1	1	7	0	16	0	0	16	29
05:00 PM	0	0	0	0	0	0	1	0	0	1	0	1	0	0	1	0	2	0	0	2	4
05:15 PM	0	1	0	0	1	0	0	0	0	0	0	0	1	0	1	0	0	0	0	0	2
05:30 PM	0	0	0	0	0	0	0	0	0	0	1	0	0	0	1	0	0	0	0	0	1
05:45 PM	0	0	0	0	0	0	1	0	0	1	1	0	0	0	1	0	1	0	0	1	3
Total	0	1	0	0	1	0	2	0	0	2	2	1	1	0	4	0	3	0	0	3	10
Grand Total	0	3	0	0	3	0	5	1	0	6	6	2	2	1	11	0	19	0	0	19	39
Apprch %	0	100	0	0		0	83.3	16.7	0		54.5	18.2	18.2	9.1		0	100	0	0		
Total %	0	7.7	0	0	7.7	0	12.8	2.6	0	15.4	15.4	5.1	5.1	2.6	28.2	0	48.7	0	0	48.7	

	Milliken Avenue Southbound					Arrow Highway Westbound					Milliken Avenue Northbound					Arrow Highway Eastbound					
Start Time	Left	Thru	Right	RoR	App. Total		Thru	Right	RoR	App. Total		Thru	Right	RoR	App. Total		Thru	Right	RoR	App. Total	Int. Total
Peak Hour Analysis From 04:45 PM to 05:30 PM - Peak 1 of 1																					
Peak Hour for Entire Intersection Begins at 04:45 PM																					
04:45 PM	0	1	0	0	1	0	0	0	0	0	0	1	0	0	1	0	1	0	0	1	3
05:00 PM	0	0	0	0	0	0	1	0	0	1	0	1	0	0	1	0	2	0	0	2	4
05:15 PM	0	1	0	0	1	0	0	0	0	0	0	0	1	0	1	0	0	0	0	0	2
05:30 PM	0	0	0	0	0	0	0	0	0	0	1	0	0	0	1	0	0	0	0	0	1
Total Volume	0	2	0	0	2	0	1	0	0	1	1	2	1	0	4	0	3	0	0	3	10
% App. Total	0	100	0	0		0	100	0	0		25	50	25	0		0	100	0	0		
PHF	.000	.500	.000	.000	.500	.000	.250	.000	.000	.250	.250	.500	.250	.000	1.000	.000	.375	.000	.000	.375	.625

Counts Unlimited Inc.
25286 Jaclyn Avenue
Moreno Valley, CA 92557
951-485-7934

City of Rancho Cucamonga
N/S: Milliken Avenue
E/W: Arrow Highway
Weather: Sunny

File Name : RNCMIARPM
Site Code : 9150092
Start Date : 6/4/2009
Page No : 2

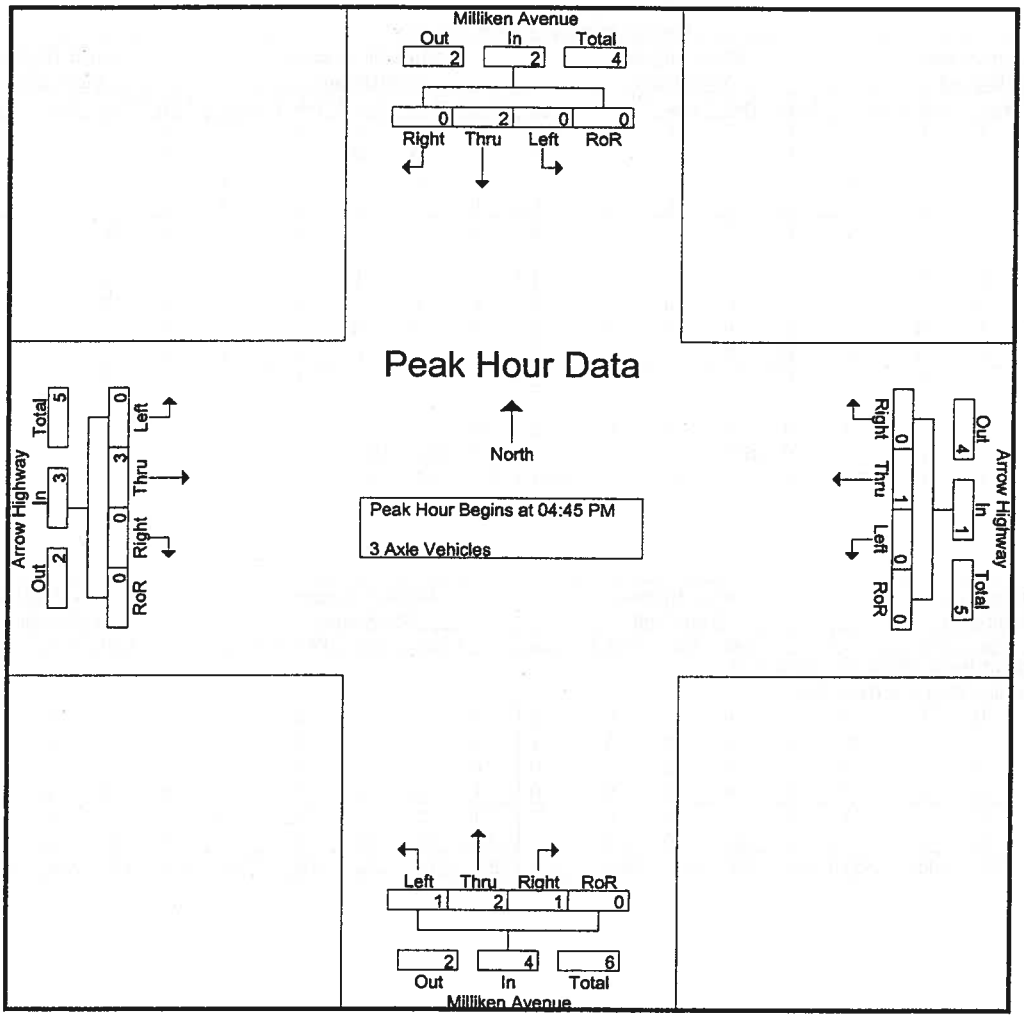

Peak Hour Analysis From 04:45 PM to 05:30 PM - Peak 1 of 1

Peak Hour for Each Approach Begins at:

	04:45 PM					04:45 PM					04:45 PM					04:45 PM				
+0 mins.	0	1	0	0	1	0	0	0	0	0	0	1	0	0	1	0	1	0	0	1
+15 mins.	0	0	0	0	0	0	1	0	0	1	0	1	0	0	1	0	2	0	0	2
+30 mins.	0	1	0	0	1	0	0	0	0	0	0	0	1	0	1	0	0	0	0	0
+45 mins.	0	0	0	0	0	0	0	0	0	0	1	0	0	0	1	0	0	0	0	0
Total Volume	0	2	0	0	2	0	1	0	0	1	1	2	1	0	4	0	3	0	0	3
% App. Total	0	100	0	0		0	100	0	0		25	50	25	0		0	100	0	0	
PHF	.000	.500	.000	.000	.500	.000	.250	.000	.000	.250	.250	.500	.250	.000	1.000	.000	.375	.000	.000	.375

Counts Unlimited Inc.
25286 Jaclyn Avenue
Moreno Valley, CA 92557
951-485-7934

City of Rancho Cucamonga
N/S: Milliken Avenue
E/W: Arrow Highway
Weather: Sunny

File Name : RNCMIARPM
Site Code : 9150092
Start Date : 6/4/2009
Page No : 1

Groups Printed- 4+ Axle Trucks

	Milliken Avenue Southbound					Arrow Highway Westbound					Milliken Avenue Northbound					Arrow Highway Eastbound					
Start Time	Left	Thru	Right	RoR	App. Total	Left	Thru	Right	RoR	App. Total	Left	Thru	Right	RoR	App. Total	Left	Thru	Right	RoR	App. Total	Int. Total
04:00 PM	0	2	0	0	2	0	0	0	0	0	6	0	0	0	6	0	1	0	4	5	13
04:15 PM	1	2	1	0	4	3	3	0	0	6	3	3	0	1	7	1	2	2	0	5	22
04:30 PM	0	1	0	0	1	1	1	0	0	2	0	4	2	0	6	0	1	6	0	7	16
04:45 PM	0	4	2	0	6	0	1	0	0	1	0	2	0	1	3	0	0	4	2	6	16
Total	1	9	3	0	13	4	5	0	0	9	9	9	2	2	22	1	4	12	6	23	67
05:00 PM	0	1	0	0	1	2	0	0	0	2	3	2	0	1	6	0	1	0	1	2	11
05:15 PM	0	1	1	0	2	1	3	0	0	4	2	3	0	0	5	0	2	1	2	5	16
05:30 PM	1	0	0	0	1	1	2	0	0	3	1	1	1	1	4	0	0	3	1	4	12
05:45 PM	1	2	0	0	3	1	1	0	0	2	0	1	1	0	2	1	1	5	0	7	14
Total	2	4	1	0	7	5	6	0	0	11	6	7	2	2	17	1	4	9	4	18	53
Grand Total	3	13	4	0	20	9	11	0	0	20	15	16	4	4	39	2	8	21	10	41	120
Apprch %	15	65	20	0		45	55	0	0		38.5	41	10.3	10.3		4.9	19.5	51.2	24.4		
Total %	2.5	10.8	3.3	0	16.7	7.5	9.2	0	0	16.7	12.5	13.3	3.3	3.3	32.5	1.7	6.7	17.5	8.3	34.2	

	Milliken Avenue Southbound					Arrow Highway Westbound					Milliken Avenue Northbound					Arrow Highway Eastbound					
Start Time	Left	Thru	Right	RoR	App. Total		Thru	Right	RoR	App. Total		Thru	Right	RoR	App. Total		Thru	Right	RoR	App. Total	Int. Total
Peak Hour Analysis From 04:45 PM to 05:30 PM - Peak 1 of 1																					
Peak Hour for Entire Intersection Begins at 04:45 PM																					
04:45 PM	0	4	2	0	6	0	1	0	0	1	0	2	0	1	3	0	0	4	2	6	16
05:00 PM	0	1	0	0	1	2	0	0	0	2	3	2	0	1	6	0	1	0	1	2	11
05:15 PM	0	1	1	0	2	1	3	0	0	4	2	3	0	0	5	0	2	1	2	5	16
05:30 PM	1	0	0	0	1	1	2	0	0	3	1	1	1	1	4	0	0	3	1	4	12
Total Volume	1	6	3	0	10	4	6	0	0	10	6	8	1	3	18	0	3	8	6	17	55
% App. Total	10	60	30	0		40	60	0	0		33.3	44.4	5.6	16.7		0	17.6	47.1	35.3		
PHF	.250	.375	.375	.000	.417	.500	.500	.000	.000	.625	.500	.667	.250	.750	.750	.000	.375	.500	.750	.708	.859

Counts Unlimited Inc.
25286 Jaclyn Avenue
Moreno Valley, CA 92557
951-485-7934

City of Rancho Cucamonga
N/S: Milliken Avenue
E/W: Arrow Highway
Weather: Sunny

File Name : RNCMIARPM
Site Code : 9150092
Start Date : 6/4/2009
Page No : 2

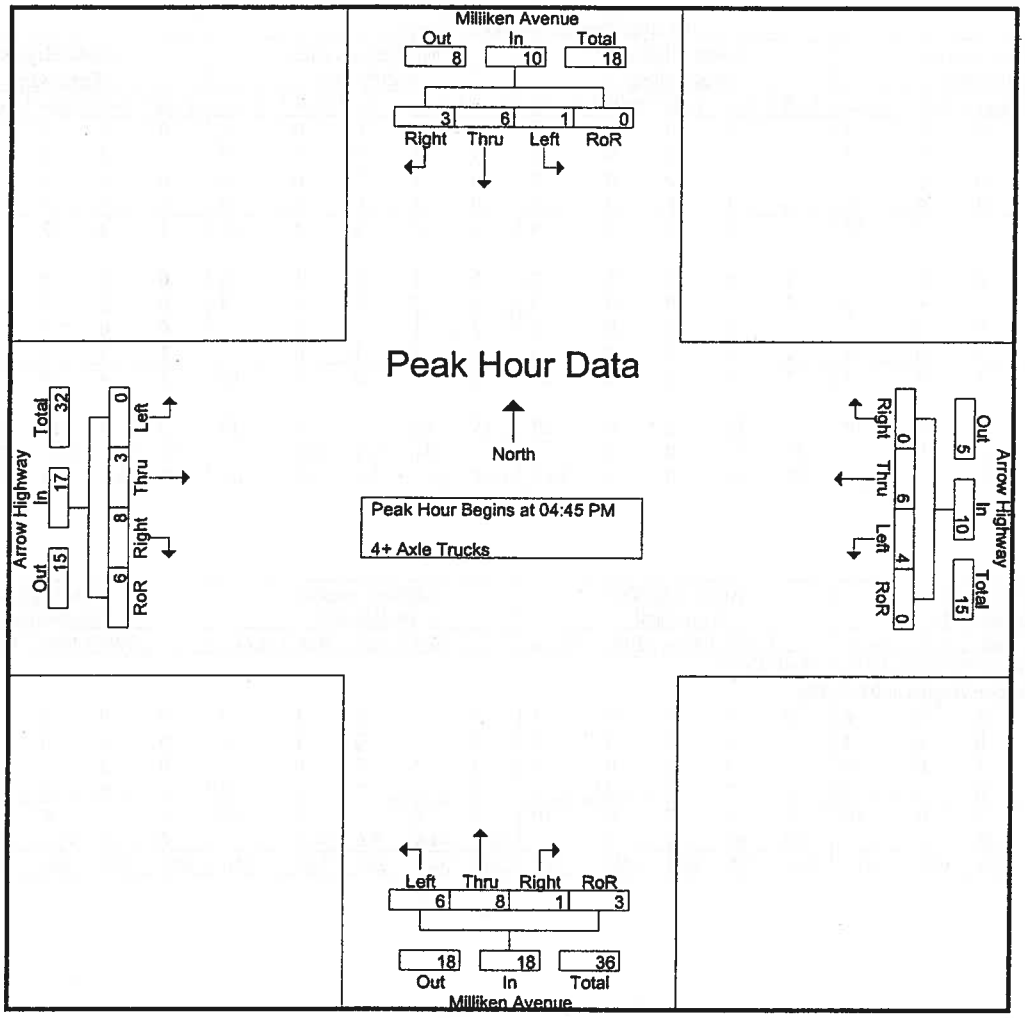

Peak Hour Analysis From 04:45 PM to 05:30 PM - Peak 1 of 1

Peak Hour for Each Approach Begins at:

	04:45 PM					04:45 PM					04:45 PM					04:45 PM				
+0 mins.	0	4	2	0	6	0	1	0	0	1	0	2	0	1	3	0	0	4	2	6
+15 mins.	0	1	0	0	1	2	0	0	0	2	3	2	0	1	6	0	1	0	1	2
+30 mins.	0	1	1	0	2	1	3	0	0	4	2	3	0	0	5	0	2	1	2	5
+45 mins.	1	0	0	0	1	1	2	0	0	3	1	1	1	1	4	0	0	3	1	4
Total Volume	1	6	3	0	10	4	6	0	0	10	6	8	1	3	18	0	3	8	6	17
% App. Total	10	60	30	0		40	60	0	0		33.3	44.4	5.6	16.7		0	17.6	47.1	35.3	
PHF	.250	.375	.375	.000	.417	.500	.500	.000	.000	.625	.500	.667	.250	.750	.750	.000	.375	.500	.750	.708

PASSENGER CAR EQUIVALENCY PEAK HOUR COUNT SUMMARY

INTERSECTION 18
Milliken Avenue (NS) / 4th Street (EW)

AM PEAK HOUR

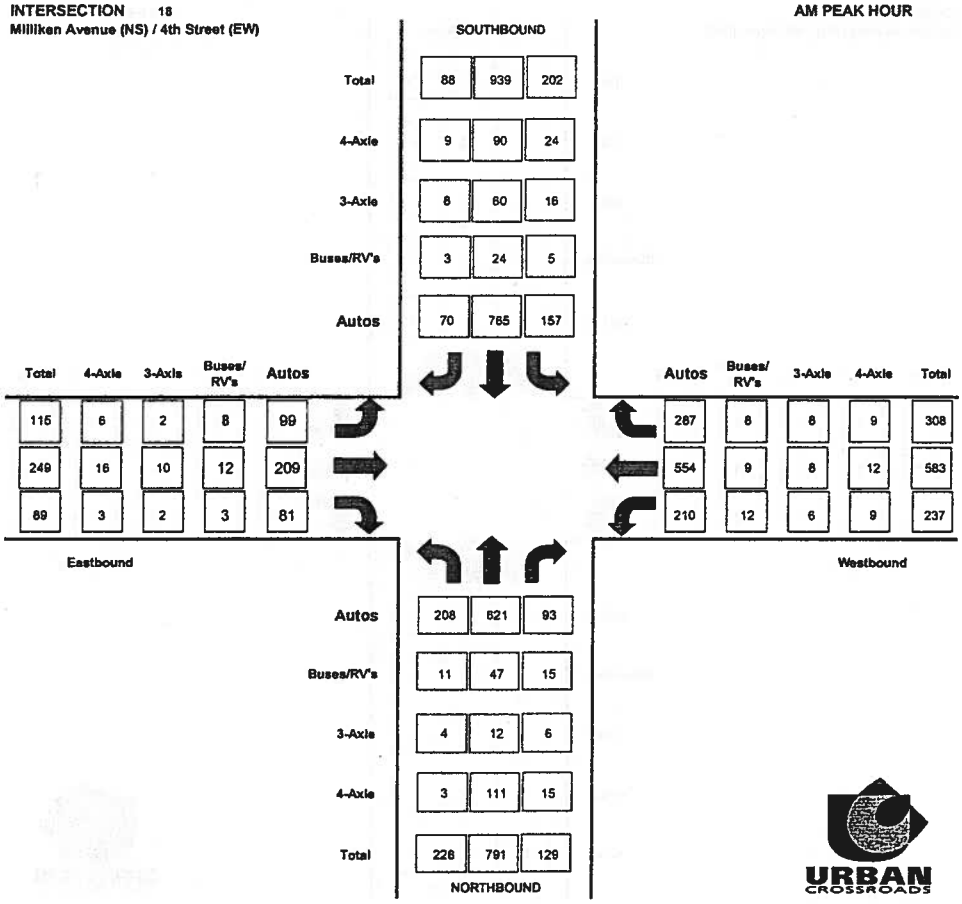

INTERSECTION 18
Milliken Avenue (NS) / 4th Street (EW)

PM PEAK HOUR

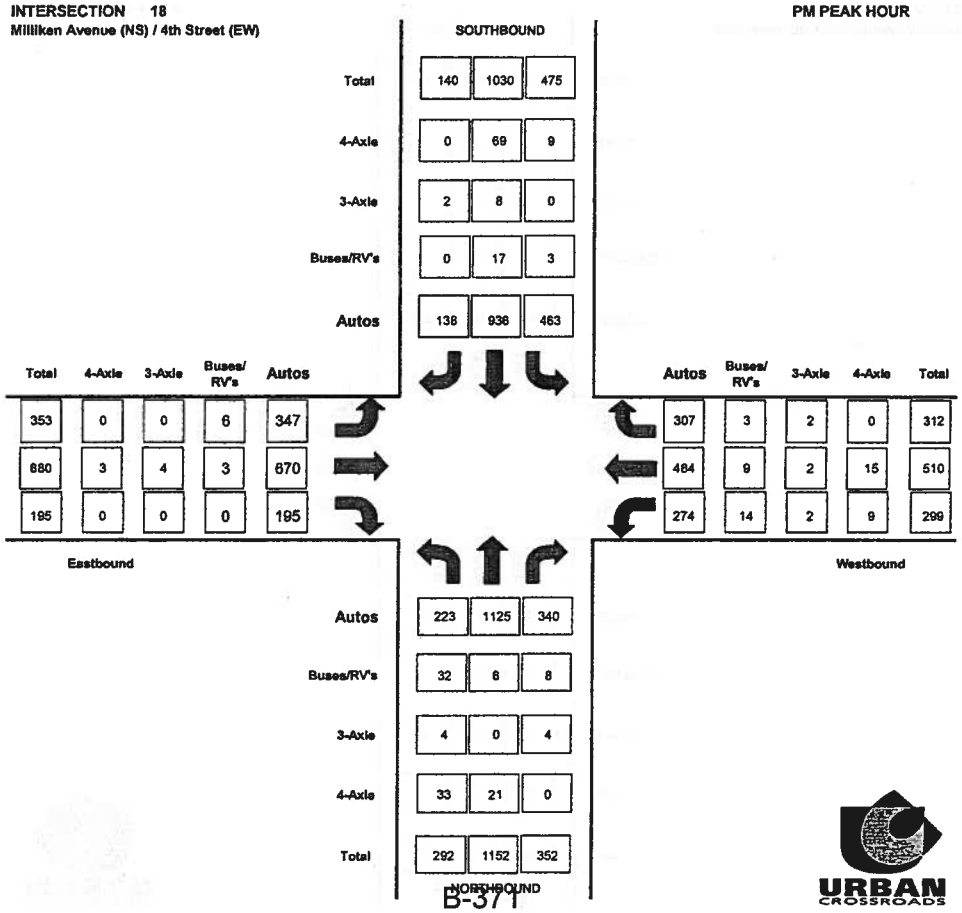

RAW PEAK HOUR COUNT SUMMARY

INTERSECTION 18
Milliken Avenue (NS) / 4th Street (EW)

AM PEAK HOUR

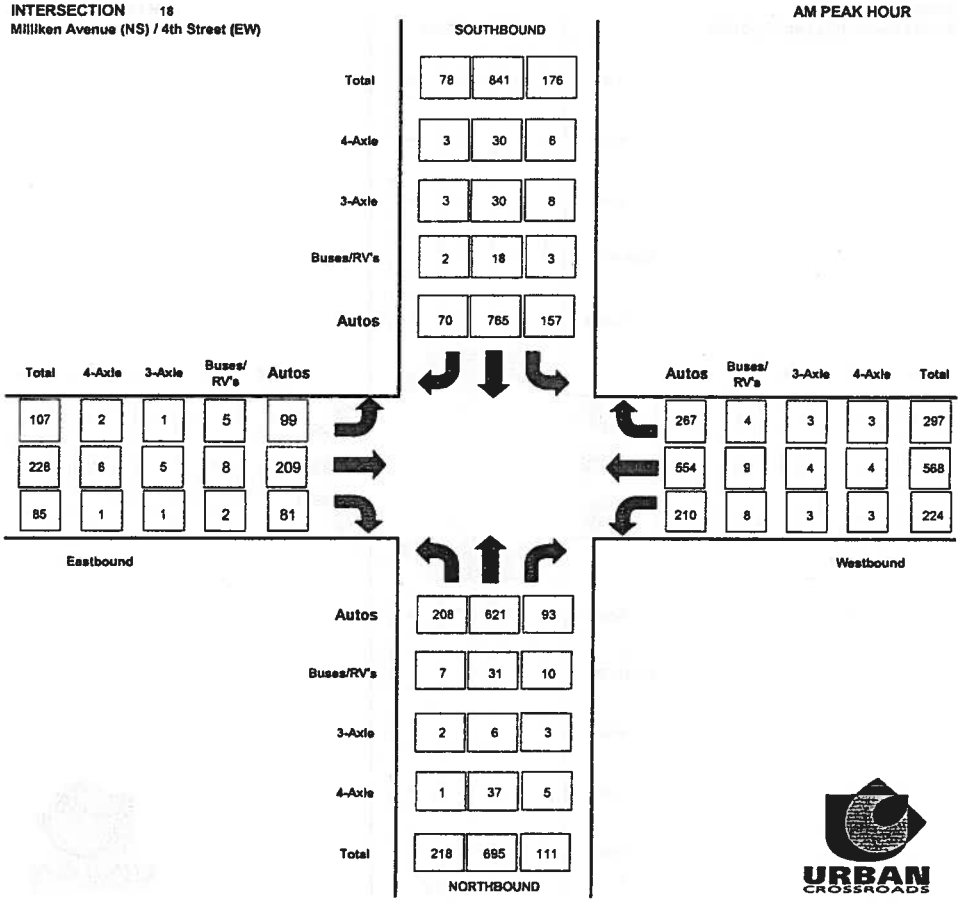

INTERSECTION 18
Milliken Avenue (NS) / 4th Street (EW)

PM PEAK HOUR

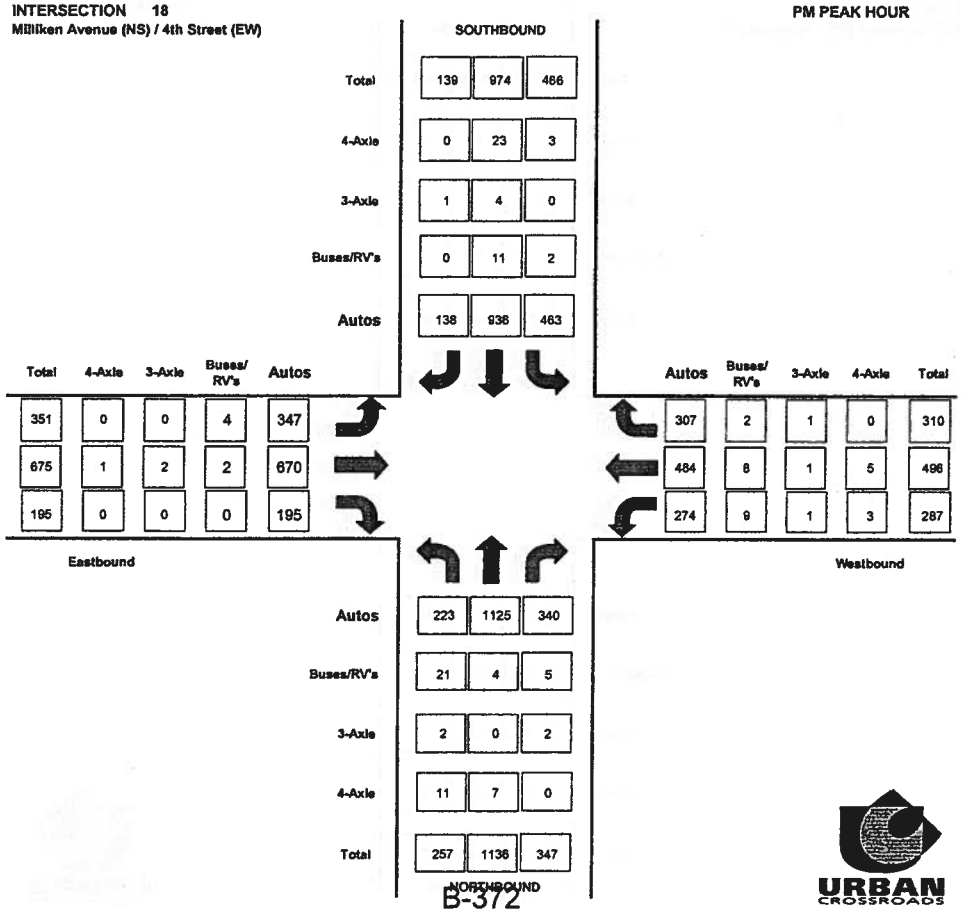

Counts Unlimited Inc.
25286 Jaclyn Avenue
Moreno Valley, CA 92557
951-485-7934

City of Rancho Cucamonga
N/S: Milliken Avenue
E/W: 4th Street
Weather: Sunny

File Name : RNCMI4AM
Site Code : 9150002
Start Date : 6/3/2009
Page No : 1

Groups Printed- Passenger Vehicles - Large 2 Axle Vehicles - 3 Axle Vehicles - 4+ Axle Trucks

	Milliken Avenue Southbound					4th Street Westbound					Milliken Avenue Northbound					4th Street Eastbound					
Start Time	Left	Thru	Right	RoR	App. Total	Left	Thru	Right	RoR	App. Total	Left	Thru	Right	RoR	App. Total	Left	Thru	Right	RoR	App. Total	Int. Total
07:00 AM	31	178	11	2	222	49	94	62	17	222	21	109	9	11	150	21	47	14	2	84	678
07:15 AM	40	208	12	0	260	69	108	71	13	261	37	120	6	11	174	28	59	19	6	112	807
07:30 AM	65	218	14	0	297	48	117	63	5	233	53	162	7	13	235	32	64	20	10	126	891
07:45 AM	29	222	21	1	273	64	172	67	17	320	55	186	8	22	271	28	66	16	8	118	982
Total	165	826	58	3	1052	230	491	263	52	1036	166	577	30	57	830	109	236	69	26	440	3358
08:00 AM	49	226	21	1	297	58	132	66	3	259	44	175	12	22	253	14	48	12	3	77	886
08:15 AM	33	175	20	0	228	54	147	65	11	277	66	172	4	23	265	33	50	14	2	99	869
08:30 AM	45	181	25	4	255	42	124	45	14	225	41	162	9	17	229	24	53	13	9	99	808
08:45 AM	49	205	20	3	277	60	110	58	6	234	29	128	8	21	186	33	75	21	6	135	832
Total	176	787	86	8	1057	214	513	234	34	995	180	637	33	83	933	104	226	60	20	410	3395
Grand Total	341	1613	144	11	2109	444	1004	497	86	2031	346	1214	63	140	1763	213	462	129	46	850	6753
Apprch %	16.2	76.5	6.8	0.5		21.9	49.4	24.5	4.2		19.6	68.9	3.6	7.9		25.1	54.4	15.2	5.4		
Total %	5	23.9	2.1	0.2	31.2	6.6	14.9	7.4	1.3	30.1	5.1	18	0.9	2.1	26.1	3.2	6.8	1.9	0.7	12.6	
Passenger Vehicles		1443										1085									
% Passenger Vehicles	88.9	89.5	89.6	72.7	89.3	92.3	96.7	95.6	95.3	95.4	95.4	89.4	74.6	85	89.7	95.3	92.4	93.8	95.7	93.5	91.8
Large 2 Axle Vehicles																					
% Large 2 Axle Vehicles	2.1	2.7	4.9	9.1	2.8	3.2	1.1	1.2	2.3	1.6	3.2	4.4	15.9	7.1	4.8	3.3	2.6	2.3	4.3	2.8	3
3 Axle Vehicles																					
% 3 Axle Vehicles	4.7	3.9	2.8	9.1	4	2.3	1.1	1.6	1.2	1.5	0.6	1.2	0	2.9	1.1	0.5	2.4	2.3	0	1.8	2.2
4+ Axle Trucks	15	63	4	1	83	10	11	8	1	30	3	62	6	7	78	2	12	2	0	16	207
% 4+ Axle Trucks																					

	Milliken Avenue Southbound					4th Street Westbound					Milliken Avenue Northbound					4th Street Eastbound					
Start Time	Left	Thru	Right	RoR	App. Total	Left	Thru	Right	RoR	App. Total	Left	Thru	Right	RoR	App. Total	Left	Thru	Right	RoR	App. Total	Int. Total
Peak Hour Analysis From 07:00 AM to 08:45 AM - Peak 1 of 1																					
Peak Hour for Entire Intersection Begins at 07:30 AM																					
07:30 AM	**65**	218	14	0	**297**	48	117	63	5	233	53	162	7	13	235	32	64	**20**	**10**	**126**	891
07:45 AM	29	222	**21**	**1**	273	**64**	**172**	**67**	**17**	**320**	55	**186**	8	22	**271**	28	**66**	16	8	118	**982**
08:00 AM	49	**226**	21	1	297	58	132	66	3	259	44	175	**12**	22	253	14	48	12	3	77	886
08:15 AM	33	175	20	0	228	54	147	65	11	277	**66**	172	4	**23**	265	**33**	50	14	2	99	869
Total Volume	176	841	76	2	1095	224	568	261	36	1089	218	695	31	80	1024	107	228	62	23	420	3628
% App. Total	16.1	76.8	6.9	0.2		20.6	52.2	24	3.3		21.3	67.9	3	7.8		25.5	54.3	14.8	5.5		
PHF	.677	.930	.905	.500	.922	.875	.826	.974	.529	.851	.826	.934	.646	.870	.945	.811	.864	.775	.575	.833	.924

Counts Unlimited Inc.
25286 Jaclyn Avenue
Moreno Valley, CA 92557
951-485-7934

City of Rancho Cucamonga
N/S: Milliken Avenue
E/W: 4th Street
Weather: Sunny

File Name : RNCMI4AM
Site Code : 9150002
Start Date : 6/3/2009
Page No : 2

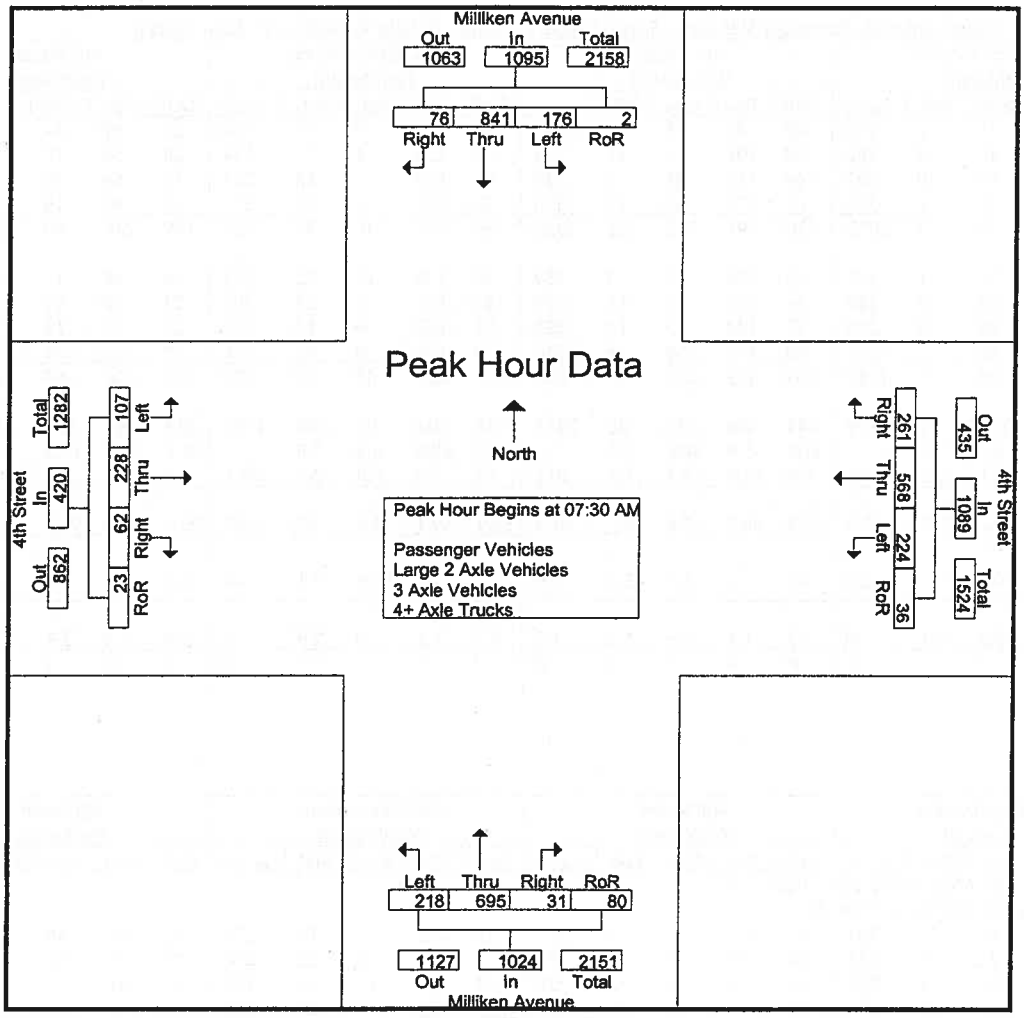

Peak Hour Analysis From 07:00 AM to 08:45 AM - Peak 1 of 1

Peak Hour for Each Approach Begins at:

	07:15 AM					07:30 AM					07:30 AM					07:00 AM				
+0 mins.	40	208	12	0	260	48	117	63	5	233	53	162	7	13	235	21	47	14	2	84
+15 mins.	65	218	14	0	297	64	172	67	17	320	55	186	8	22	271	28	59	19	6	112
+30 mins.	29	222	21	1	273	58	132	66	3	259	44	175	12	22	253	32	64	20	10	126
+45 mins.	49	226	21	1	297	54	147	65	11	277	66	172	4	23	265	28	66	16	8	118
Total Volume	183	874	68	2	1127	224	568	261	36	1089	218	695	31	80	1024	109	236	69	26	440
% App. Total	16.2	77.6	6	0.2		20.6	52.2	24	3.3		21.3	67.9	3	7.8		24.8	53.6	15.7	5.9	
PHF	.704	.967	.810	.500	.949	.875	.826	.974	.529	.851	.826	.934	.646	.870	.945	.852	.894	.863	.650	.873

Counts Unlimited Inc.
25286 Jaclyn Avenue
Moreno Valley, CA 92557
951-485-7934

City of Rancho Cucamonga
N/S: Milliken Avenue
E/W: 4th Street
Weather: Sunny

File Name : RNCMI4AM
Site Code : 9150002
Start Date : 6/3/2009
Page No : 1

Groups Printed- Passenger Vehicles

	Milliken Avenue Southbound					4th Street Westbound					Milliken Avenue Northbound					4th Street Eastbound					
Start Time	Left	Thru	Right	RoR	App. Total	Left	Thru	Right	RoR	App. Total	Left	Thru	Right	RoR	App. Total	Left	Thru	Right	RoR	App. Total	Int. Total
07:00 AM	29	156	11	2	198	49	91	58	16	214	21	100	5	10	136	21	45	13	2	81	629
07:15 AM	34	188	10	0	232	64	104	67	13	248	36	109	6	10	161	28	55	18	6	107	748
07:30 AM	59	206	14	0	279	44	115	61	5	225	49	147	4	10	210	31	61	19	9	120	834
07:45 AM	26	200	16	1	243	61	169	66	16	312	54	173	7	18	252	26	57	15	8	106	913
Total	148	750	51	3	952	218	479	252	50	999	160	529	22	48	759	106	218	65	25	414	3124
08:00 AM	45	199	18	1	263	53	126	61	3	243	40	153	12	18	223	13	45	12	3	73	802
08:15 AM	27	160	20	0	207	52	144	64	11	271	65	148	3	21	237	29	46	13	2	90	805
08:30 AM	39	155	21	1	216	39	117	41	12	209	40	146	6	15	207	23	49	12	9	93	725
08:45 AM	44	179	19	3	245	48	105	57	6	216	25	109	4	17	155	32	69	19	5	125	741
Total	155	693	78	5	931	192	492	223	32	939	170	556	25	71	822	97	209	56	19	381	3073
Grand Total	303	1443	129	8	1883	410	971	475	82	1938	330	1085	47	119	1581	203	427	121	44	795	6197
Apprch %	16.1	76.6	6.9	0.4		21.2	50.1	24.5	4.2		20.9	68.6	3	7.5		25.5	53.7	15.2	5.5		
Total %	4.9	23.3	2.1	0.1	30.4	6.6	15.7	7.7	1.3	31.3	5.3	17.5	0.8	1.9	25.5	3.3	6.9	2	0.7	12.8	

	Milliken Avenue Southbound					4th Street Westbound					Milliken Avenue Northbound					4th Street Eastbound					
Start Time	Left	Thru	Right	RoR	App. Total		Thru	Right	RoR	App. Total		Thru	Right	RoR	App. Total		Thru	Right	RoR	App. Total	Int. Total
Peak Hour Analysis From 07:30 AM to 08:15 AM - Peak 1 of 1																					
Peak Hour for Entire Intersection Begins at 07:30 AM																					
07:30 AM	59	206	14	0	279	44	115	61	5	225	49	147	4	10	210	31	61	19	9	120	834
07:45 AM	26	200	16	1	243	61	169	66	16	312	54	173	7	18	252	26	57	15	8	106	913
08:00 AM	45	199	18	1	263	53	126	61	3	243	40	153	12	18	223	13	45	12	3	73	802
08:15 AM	27	160	20	0	207	52	144	64	11	271	65	148	3	21	237	29	46	13	2	90	805
Total Volume	157	765	68	2	992	210	554	252	35	1051	208	621	26	67	922	99	209	59	22	389	3354
% App. Total	15.8	77.1	6.9	0.2		20	52.7	24	3.3		22.6	67.4	2.8	7.3		25.4	53.7	15.2	5.7		
PHF	.665	.928	.850	.500	.889	.861	.820	.955	.547	.842	.800	.897	.542	.798	.915	.798	.857	.776	.611	.810	.918

Counts Unlimited Inc.
25286 Jaclyn Avenue
Moreno Valley, CA 92557
951-485-7934

City of Rancho Cucamonga
N/S: Milliken Avenue
E/W: 4th Street
Weather: Sunny

File Name : RNCMI4AM
Site Code : 9150002
Start Date : 6/3/2009
Page No : 2

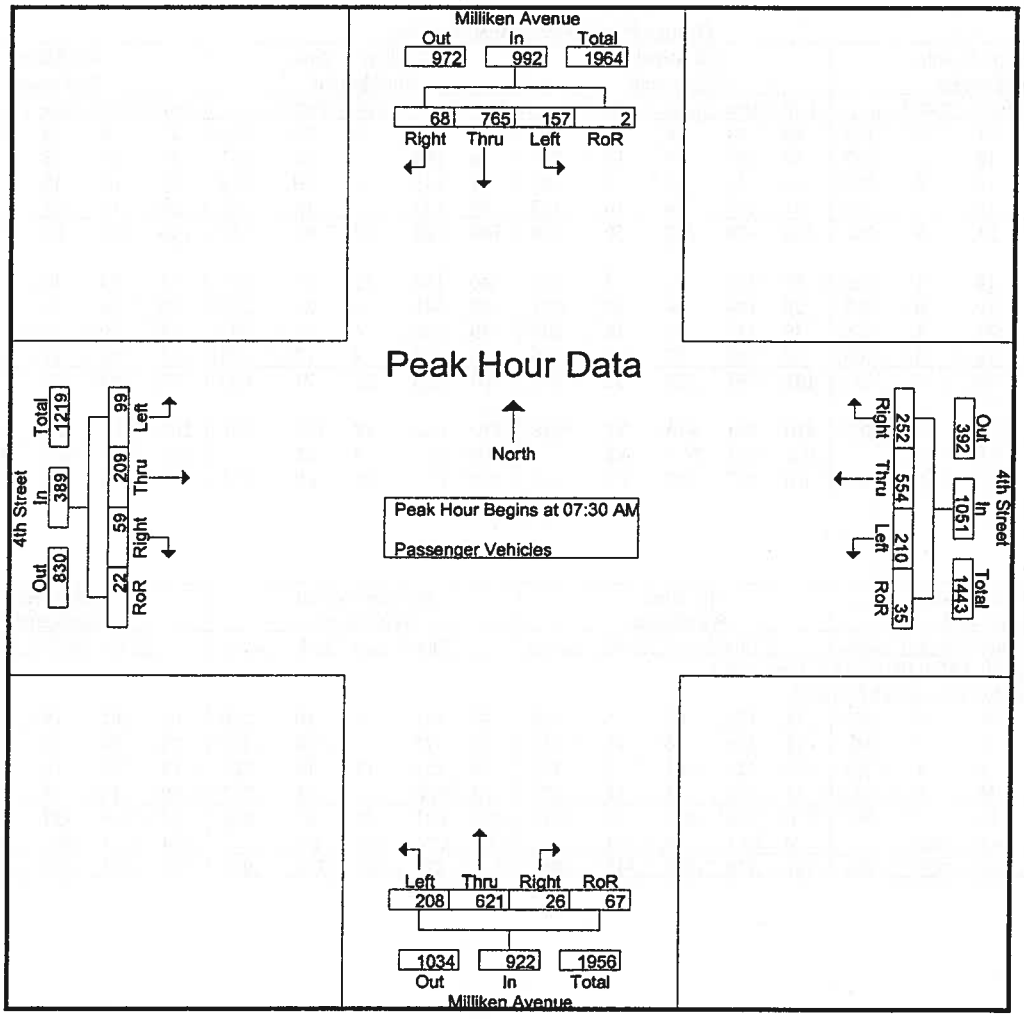

Peak Hour Analysis From 07:30 AM to 08:15 AM - Peak 1 of 1

Peak Hour for Each Approach Begins at:

	07:30 AM					07:30 AM					07:30 AM					07:30 AM				
+0 mins.	**59**	**206**	14	0	**279**	44	115	61	5	225	49	147	4	10	210	**31**	**61**	**19**	**9**	**120**
+15 mins.	26	200	16	**1**	243	**61**	**169**	**66**	**16**	**312**	54	**173**	7	18	**252**	26	57	15	8	106
+30 mins.	45	199	18	1	263	53	126	61	3	243	40	153	**12**	18	223	13	45	12	3	73
+45 mins.	27	160	**20**	0	207	52	144	64	11	271	**65**	148	3	**21**	237	29	46	13	2	90
Total Volume	157	765	68	2	992	210	554	252	35	1051	208	621	26	67	922	99	209	59	22	389
% App. Total	15.8	77.1	6.9	0.2		20	52.7	24	3.3		22.6	67.4	2.8	7.3		25.4	53.7	15.2	5.7	
PHF	.665	.928	.850	.500	.889	.861	.820	.955	.547	.842	.800	.897	.542	.798	.915	.798	.857	.776	.611	.810

Counts Unlimited Inc.
25286 Jaclyn Avenue
Moreno Valley, CA 92557
951-485-7934

City of Rancho Cucamonga
N/S: Milliken Avenue
E/W: 4th Street
Weather: Sunny

File Name : RNCMI4AM
Site Code : 9150002
Start Date : 6/3/2009
Page No : 1

Groups Printed- Large 2 Axle Vehicles

	Milliken Avenue Southbound					4th Street Westbound					Milliken Avenue Northbound					4th Street Eastbound					
Start Time	Left	Thru	Right	RoR	App. Total	Left	Thru	Right	RoR	App. Total	Left	Thru	Right	RoR	App. Total	Left	Thru	Right	RoR	App. Total	Int. Total
07:00 AM	1	8	0	0	9	0	1	0	1	2	0	4	2	0	6	0	0	0	0	0	17
07:15 AM	0	4	2	0	6	1	0	0	0	1	1	4	0	1	6	0	0	0	0	0	13
07:30 AM	0	2	0	0	2	2	2	0	0	4	4	6	2	2	14	1	0	0	1	2	22
07:45 AM	3	4	1	0	8	3	3	1	1	8	0	6	1	2	9	1	4	1	0	6	31
Total	4	18	3	0	25	6	6	1	2	15	5	20	5	5	35	2	4	1	1	8	83
08:00 AM	0	5	1	0	6	1	0	1	0	2	3	10	0	1	14	1	0	0	0	1	23
08:15 AM	0	5	0	0	5	2	1	1	0	4	0	9	1	1	11	2	4	0	0	6	26
08:30 AM	0	10	2	1	13	1	3	2	0	6	0	6	1	1	8	1	1	1	0	3	30
08:45 AM	3	6	1	0	10	4	1	1	0	6	3	8	3	2	16	1	3	1	1	6	38
Total	3	26	4	1	34	8	5	5	0	18	6	33	5	5	49	5	8	2	1	16	117
Grand Total	7	44	7	1	59	14	11	6	2	33	11	53	10	10	84	7	12	3	2	24	200
Apprch %	11.9	74.6	11.9	1.7		42.4	33.3	18.2	6.1		13.1	63.1	11.9	11.9		29.2	50	12.5	8.3		
Total %	3.5	22	3.5	0.5	29.5	7	5.5	3	1	16.5	5.5	26.5	5	5	42	3.5	6	1.5	1	12	

	Milliken Avenue Southbound					4th Street Westbound					Milliken Avenue Northbound					4th Street Eastbound					
Start Time	Left	Thru	Right	RoR	App. Total		Thru	Right	RoR	App. Total		Thru	Right	RoR	App. Total		Thru	Right	RoR	App. Total	Int. Total
Peak Hour Analysis From 07:30 AM to 08:15 AM - Peak 1 of 1																					
Peak Hour for Entire Intersection Begins at 07:30 AM																					
07:30 AM	0	2	0	0	2	2	2	0	0	4	4	6	2	2	14	1	0	0	1	2	22
07:45 AM	3	4	1	0	8	3	3	1	1	8	0	6	1	2	9	1	4	1	0	6	31
08:00 AM	0	5	1	0	6	1	0	1	0	2	3	10	0	1	14	1	0	0	0	1	23
08:15 AM	0	5	0	0	5	2	1	1	0	4	0	9	1	1	11	2	4	0	0	6	26
Total Volume	3	16	2	0	21	8	6	3	1	18	7	31	4	6	48	5	8	1	1	15	102
% App. Total	14.3	76.2	9.5	0		44.4	33.3	16.7	5.6		14.6	64.6	8.3	12.5		33.3	53.3	6.7	6.7		
PHF	.250	.800	.500	.000	.656	.667	.500	.750	.250	.563	.438	.775	.500	.750	.857	.625	.500	.250	.250	.625	.823

Counts Unlimited Inc.
25286 Jaclyn Avenue
Moreno Valley, CA 92557
951-485-7934

City of Rancho Cucamonga
N/S: Milliken Avenue
E/W: 4th Street
Weather: Sunny

File Name : RNCMI4AM
Site Code : 9150002
Start Date : 6/3/2009
Page No : 2

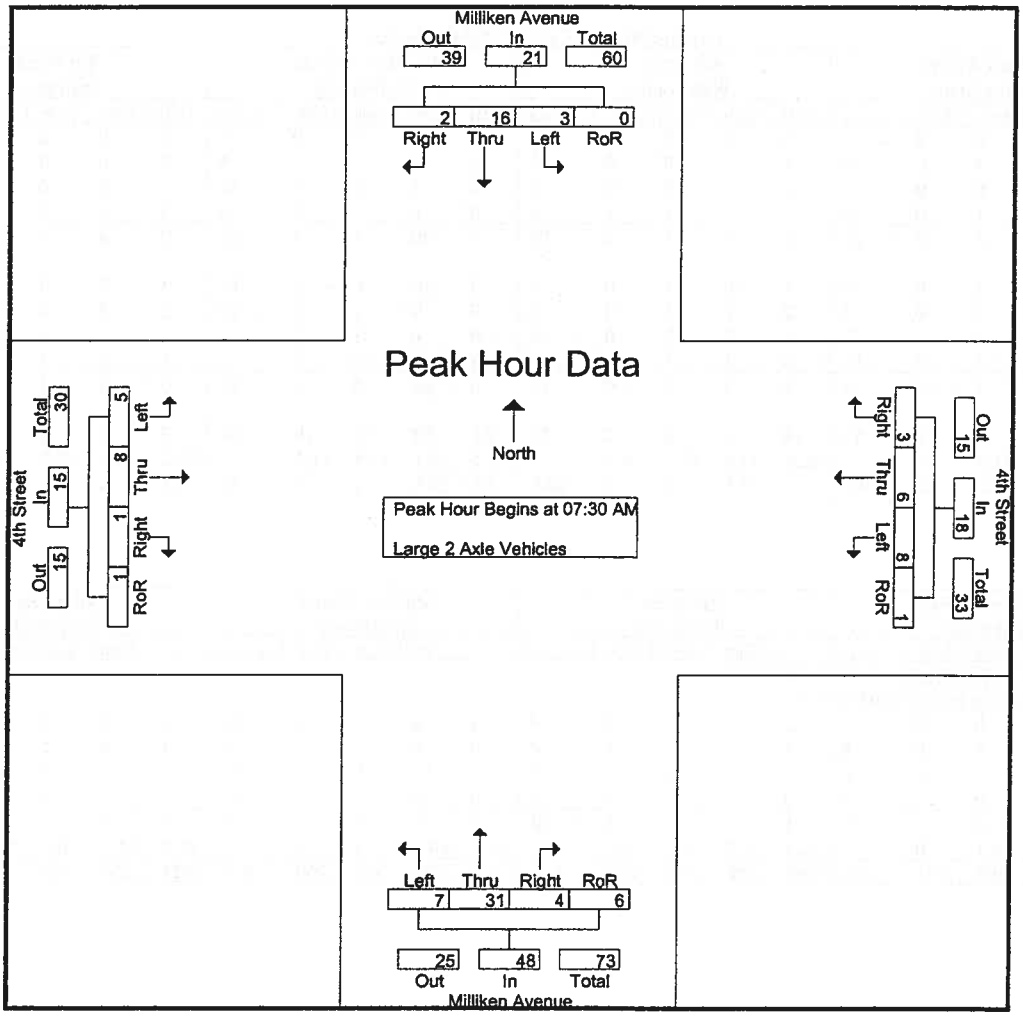

Peak Hour Analysis From 07:30 AM to 08:15 AM - Peak 1 of 1

Peak Hour for Each Approach Begins at:

	07:30 AM					07:30 AM					07:30 AM					07:30 AM				
+0 mins.	0	2	0	0	2	2	2	0	0	4	4	6	2	2	14	1	0	0	1	2
+15 mins.	3	4	1	0	8	3	3	1	1	8	0	6	1	2	9	1	4	1	0	6
+30 mins.	0	5	1	0	6	1	0	1	0	2	3	10	0	1	14	1	0	0	0	1
+45 mins.	0	5	0	0	5	2	1	1	0	4	0	9	1	1	11	2	4	0	0	6
Total Volume	3	16	2	0	21	8	6	3	1	18	7	31	4	6	48	5	8	1	1	15
% App. Total	14.3	76.2	9.5	0		44.4	33.3	16.7	5.6		14.6	64.6	8.3	12.5		33.3	53.3	6.7	6.7	
PHF	.250	.800	.500	.000	.656	.667	.500	.750	.250	.563	.438	.775	.500	.750	.857	.625	.500	.250	.250	.625

Counts Unlimited Inc.
25286 Jaclyn Avenue
Moreno Valley, CA 92557
951-485-7934

City of Rancho Cucamonga
N/S: Milliken Avenue
E/W: 4th Street
Weather: Sunny

File Name : RNCMI4AM
Site Code : 9150002
Start Date : 6/3/2009
Page No : 1

Groups Printed- 3 Axle Vehicles

	Milliken Avenue Southbound					4th Street Westbound					Milliken Avenue Northbound					4th Street Eastbound					
Start Time	Left	Thru	Right	RoR	App. Total	Left	Thru	Right	RoR	App. Total	Left	Thru	Right	RoR	App. Total	Left	Thru	Right	RoR	App. Total	Int. Total
07:00 AM	1	7	0	0	8	0	1	2	0	3	0	1	0	0	1	0	2	1	0	3	15
07:15 AM	3	8	0	0	11	2	2	2	0	6	0	2	0	0	2	0	1	1	0	2	21
07:30 AM	3	5	0	0	8	1	0	1	0	2	0	1	0	0	1	0	1	0	0	1	12
07:45 AM	0	9	2	0	11	0	0	0	0	0	1	0	0	1	2	0	2	0	0	2	15
Total	7	29	2	0	38	3	3	5	0	11	1	4	0	1	6	0	6	2	0	8	63
08:00 AM	2	11	1	0	14	2	3	2	0	7	1	2	0	1	4	0	2	0	0	2	27
08:15 AM	3	5	0	0	8	0	1	0	0	1	0	3	0	1	4	1	0	1	0	2	15
08:30 AM	3	8	1	1	13	1	2	1	1	5	0	3	0	0	3	0	1	0	0	1	22
08:45 AM	1	10	0	0	11	4	2	0	0	6	0	2	0	1	3	0	2	0	0	2	22
Total	9	34	2	1	46	7	8	3	1	19	1	10	0	3	14	1	5	1	0	7	86
Grand Total	16	63	4	1	84	10	11	8	1	30	2	14	0	4	20	1	11	3	0	15	149
Apprch %	19	75	4.8	1.2		33.3	36.7	26.7	3.3		10	70	0	20		6.7	73.3	20	0		
Total %	10.7	42.3	2.7	0.7	56.4	6.7	7.4	5.4	0.7	20.1	1.3	9.4	0	2.7	13.4	0.7	7.4	2	0	10.1	

	Milliken Avenue Southbound					4th Street Westbound					Milliken Avenue Northbound					4th Street Eastbound					
Start Time	Left	Thru	Right	RoR	App. Total		Thru	Right	RoR	App. Total		Thru	Right	RoR	App. Total		Thru	Right	RoR	App. Total	Int. Total
Peak Hour Analysis From 07:30 AM to 08:15 AM - Peak 1 of 1																					
Peak Hour for Entire Intersection Begins at 07:30 AM																					
07:30 AM	3	5	0	0	8	1	0	1	0	2	0	1	0	0	1	0	1	0	0	1	12
07:45 AM	0	9	2	0	11	0	0	0	0	0	1	0	0	1	2	0	2	0	0	2	15
08:00 AM	2	11	1	0	14	2	3	2	0	7	1	2	0	1	4	0	2	0	0	2	27
08:15 AM	3	5	0	0	8	0	1	0	0	1	0	3	0	1	4	1	0	1	0	2	15
Total Volume	8	30	3	0	41	3	4	3	0	10	2	6	0	3	11	1	5	1	0	7	69
% App. Total	19.5	73.2	7.3	0		30	40	30	0		18.2	54.5	0	27.3		14.3	71.4	14.3	0		
PHF	.667	.682	.375	.000	.732	.375	.333	.375	.000	.357	.500	.500	.000	.750	.688	.250	.625	.250	.000	.875	.639

Counts Unlimited Inc.
25286 Jaclyn Avenue
Moreno Valley, CA 92557
951-485-7934

City of Rancho Cucamonga
N/S: Milliken Avenue
E/W: 4th Street
Weather: Sunny

File Name : RNCMI4AM
Site Code : 9150002
Start Date : 6/3/2009
Page No : 2

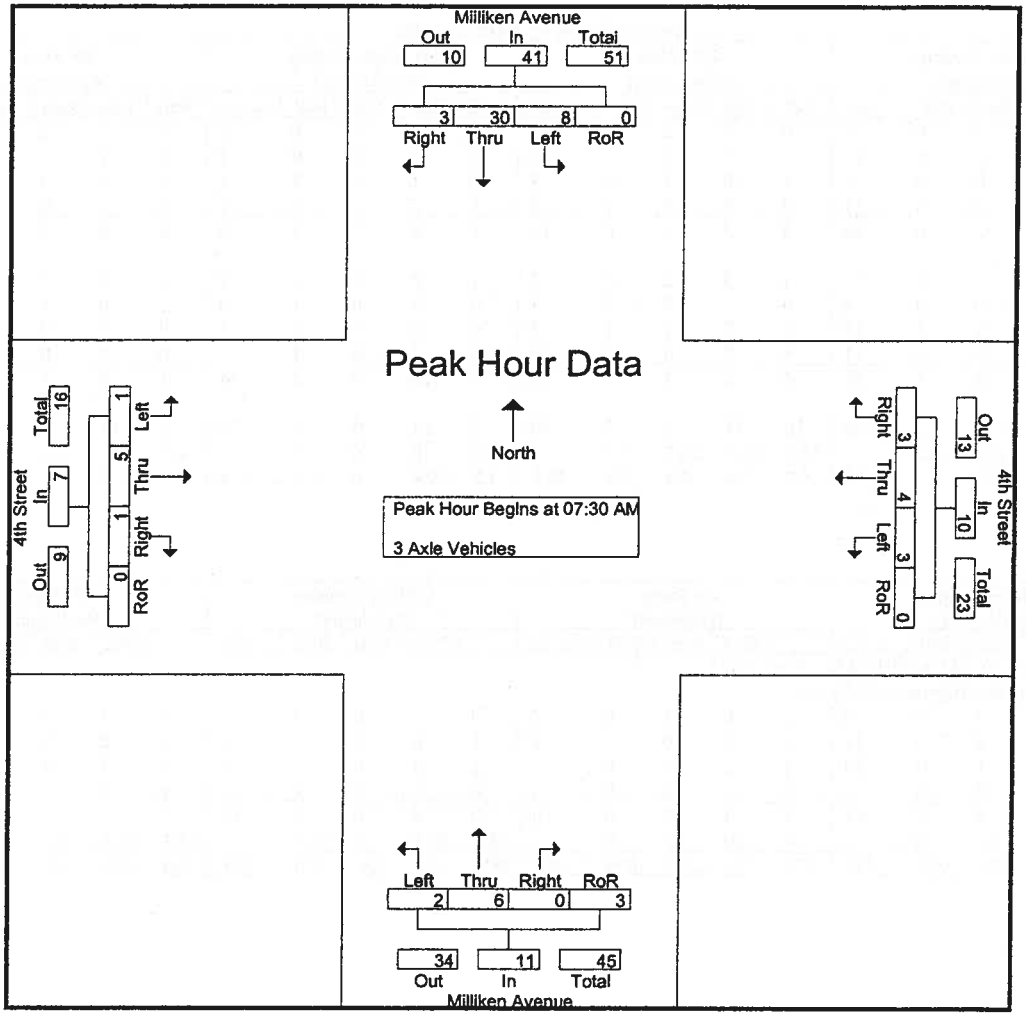

Peak Hour Analysis From 07:30 AM to 08:15 AM - Peak 1 of 1

Peak Hour for Each Approach Begins at:

	07:30 AM					07:30 AM					07:30 AM					07:30 AM				
+0 mins.	3	5	0	0	8	1	0	1	0	2	0	1	0	0	1	0	1	0	0	1
+15 mins.	0	9	2	0	11	0	0	0	0	0	1	0	0	1	2	0	2	0	0	2
+30 mins.	2	11	1	0	14	2	3	2	0	7	1	2	0	1	4	0	2	0	0	2
+45 mins.	3	5	0	0	8	0	1	0	0	1	0	3	0	1	4	1	0	1	0	2
Total Volume	8	30	3	0	41	3	4	3	0	10	2	6	0	3	11	1	5	1	0	7
% App. Total	19.5	73.2	7.3	0		30	40	30	0		18.2	54.5	0	27.3		14.3	71.4	14.3	0	
PHF	.667	.682	.375	.000	.732	.375	.333	.375	.000	.357	.500	.500	.000	.750	.688	.250	.625	.250	.000	.875

Counts Unlimited Inc.
25286 Jaclyn Avenue
Moreno Valley, CA 92557
951-485-7934

City of Rancho Cucamonga
N/S: Milliken Avenue
E/W: 4th Street
Weather: Sunny

File Name : RNCMI4AM
Site Code : 9150002
Start Date : 6/3/2009
Page No : 1

Groups Printed- 4+ Axle Trucks

	Milliken Avenue Southbound					4th Street Westbound					Milliken Avenue Northbound					4th Street Eastbound					
Start Time	Left	Thru	Right	RoR	App. Total	Left	Thru	Right	RoR	App. Total	Left	Thru	Right	RoR	App. Total	Left	Thru	Right	RoR	App. Total	Int. Total
07:00 AM	0	7	0	0	7	0	1	2	0	3	0	4	2	1	7	0	0	0	0	0	17
07:15 AM	3	8	0	0	11	2	2	2	0	6	0	5	0	0	5	0	3	0	0	3	25
07:30 AM	3	5	0	0	8	1	0	1	0	2	0	8	1	1	10	0	2	1	0	3	23
07:45 AM	0	9	2	0	11	0	0	0	0	0	0	7	0	1	8	1	3	0	0	4	23
Total	6	29	2	0	37	3	3	5	0	11	0	24	3	3	30	1	8	1	0	10	88
08:00 AM	2	11	1	0	14	2	3	2	0	7	0	10	0	2	12	0	1	0	0	1	34
08:15 AM	3	5	0	0	8	0	1	0	0	1	1	12	0	0	13	1	0	0	0	1	23
08:30 AM	3	8	1	1	13	1	2	1	1	5	1	7	2	1	11	0	2	0	0	2	31
08:45 AM	1	10	0	0	11	4	2	0	0	6	1	9	1	1	12	0	1	1	0	2	31
Total	9	34	2	1	46	7	8	3	1	19	3	38	3	4	48	1	4	1	0	6	119
Grand Total	15	63	4	1	83	10	11	8	1	30	3	62	6	7	78	2	12	2	0	16	207
Apprch %	18.1	75.9	4.8	1.2		33.3	36.7	26.7	3.3		3.8	79.5	7.7	9		12.5	75	12.5	0		
Total %	7.2	30.4	1.9	0.5	40.1	4.8	5.3	3.9	0.5	14.5	1.4	30	2.9	3.4	37.7	1	5.8	1	0	7.7	

	Milliken Avenue Southbound					4th Street Westbound					Milliken Avenue Northbound					4th Street Eastbound					
Start Time	Left	Thru	Right	RoR	App. Total		Thru	Right	RoR	App. Total		Thru	Right	RoR	App. Total		Thru	Right	RoR	App. Total	Int. Total
Peak Hour Analysis From 07:30 AM to 08:15 AM - Peak 1 of 1																					
Peak Hour for Entire Intersection Begins at 07:30 AM																					
07:30 AM	3	5	0	0	8	1	0	1	0	2	0	8	1	1	10	0	2	1	0	3	23
07:45 AM	0	9	2	0	11	0	0	0	0	0	0	7	0	1	8	1	3	0	0	4	23
08:00 AM	2	11	1	0	14	2	3	2	0	7	0	10	0	2	12	0	1	0	0	1	34
08:15 AM	3	5	0	0	8	0	1	0	0	1	1	12	0	0	13	1	0	0	0	1	23
Total Volume	8	30	3	0	41	3	4	3	0	10	1	37	1	4	43	2	6	1	0	9	103
% App. Total	19.5	73.2	7.3	0		30	40	30	0		2.3	86	2.3	9.3		22.2	66.7	11.1	0		
PHF	.667	.682	.375	.000	.732	.375	.333	.375	.000	.357	.250	.771	.250	.500	.827	.500	.500	.250	.000	.563	.757

Counts Unlimited Inc.
25286 Jaclyn Avenue
Moreno Valley, CA 92557
951-485-7934

City of Rancho Cucamonga
N/S: Milliken Avenue
E/W: 4th Street
Weather: Sunny

File Name : RNCMI4AM
Site Code : 9150002
Start Date : 6/3/2009
Page No : 2

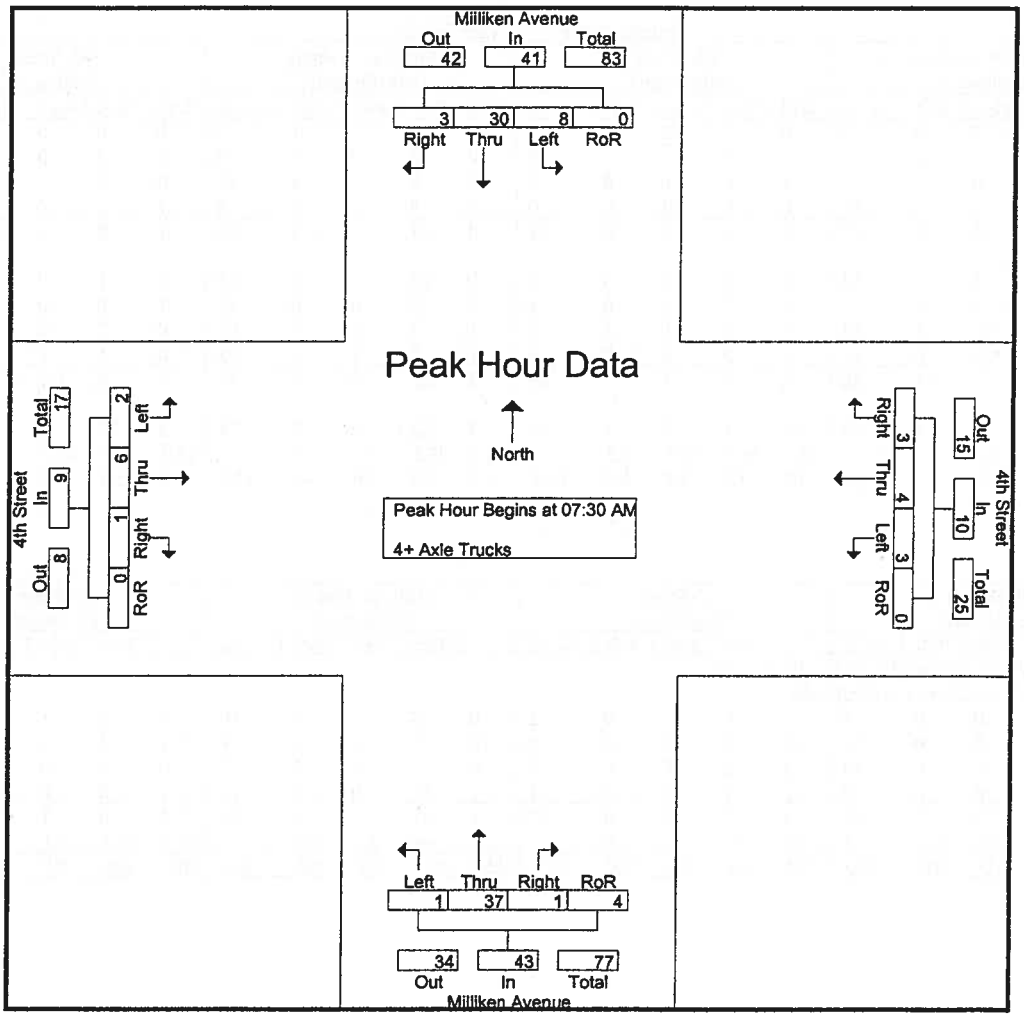

Peak Hour Analysis From 07:30 AM to 08:15 AM - Peak 1 of 1

Peak Hour for Each Approach Begins at:

	07:30 AM					07:30 AM					07:30 AM					07:30 AM				
+0 mins.	3	5	0	0	8	1	0	1	0	2	0	8	1	1	10	0	2	1	0	3
+15 mins.	0	9	2	0	11	0	0	0	0	0	0	7	0	1	8	1	3	0	0	4
+30 mins.	2	11	1	0	14	2	3	2	0	7	0	10	0	2	12	0	1	0	0	1
+45 mins.	3	5	0	0	8	0	1	0	0	1	1	12	0	0	13	1	0	0	0	1
Total Volume	8	30	3	0	41	3	4	3	0	10	1	37	1	4	43	2	6	1	0	9
% App. Total	19.5	73.2	7.3	0		30	40	30	0		2.3	86	2.3	9.3		22.2	66.7	11.1	0	
PHF	.667	.682	.375	.000	.732	.375	.333	.375	.000	.357	.250	.771	.250	.500	.827	.500	.500	.250	.000	.563

Counts Unlimited Inc.
25286 Jaclyn Avenue
Moreno Valley, CA 92557
951-485-7934

City of Rancho Cucamonga
N/S: Milliken Avenue
E/W: 4th Street
Weather: Sunny

File Name : RNCMI4PM
Site Code : 9150002
Start Date : 6/3/2009
Page No : 1

Groups Printed- Passenger Vehicles - Large 2 Axle Vehicles - 3 Axle Vehicles - 4+ Axle Trucks

	Milliken Avenue Southbound					4th Street Westbound					Milliken Avenue Northbound					4th Street Eastbound					
Start Time	Left	Thru	Right	RoR	App. Total	Left	Thru	Right	RoR	App. Total	Left	Thru	Right	RoR	App. Total	Left	Thru	Right	RoR	App. Total	Int. Total
04:00 PM	83	219	22	4	328	68	105	49	4	226	50	216	14	36	316	69	132	20	11	232	1102
04:15 PM	81	178	31	0	290	67	119	66	3	255	45	191	33	26	295	59	125	25	19	228	1068
04:30 PM	114	236	24	3	377	70	139	69	5	283	68	239	36	31	374	61	173	25	16	275	1309
04:45 PM	97	200	35	0	332	67	122	75	3	267	55	260	44	36	395	88	137	33	17	275	1269
Total	375	833	112	7	1327	272	485	259	15	1031	218	906	127	129	1380	277	567	103	63	1010	4748
05:00 PM	138	304	36	1	479	77	127	76	5	285	73	249	54	34	410	74	219	28	22	343	1517
05:15 PM	134	254	34	0	422	66	119	79	3	267	64	316	48	47	475	100	183	30	24	337	1501
05:30 PM	99	216	33	0	348	77	128	64	5	274	65	311	43	41	460	89	136	27	14	266	1348
05:45 PM	66	115	18	7	206	48	82	36	8	174	56	255	16	38	365	79	147	27	16	269	1014
Total	437	889	121	8	1455	268	456	255	21	1000	258	1131	161	160	1710	342	685	112	76	1215	5380
Grand Total	812	1722	233	15	2782	540	941	514	36	2031	476	2037	288	289	3090	619	1252	215	139	2225	10128
Apprch %	29.2	61.9	8.4	0.5		26.6	46.3	25.3	1.8		15.4	65.9	9.3	9.4		27.8	56.3	9.7	6.2		
Total %	8	17	2.3	0.1	27.5	5.3	9.3	5.1	0.4	20.1	4.7	20.1	2.8	2.9	30.5	6.1	12.4	2.1	1.4	22	
Passenger Vehicles		1651										2016					1245				
% Passenger Vehicles	99	95.9	98.7	100	97.1	95.6	98.3	98.1	97.2	97.5	87.6	99	99	97.6	97.1	98.9	99.4	99.5	100	99.3	97.7
Large 2 Axle Vehicles																					
% Large 2 Axle Vehicles	0.4	1.2	0	0	0.9	2.6	0.7	1.4	2.8	1.4	7.1	0.3	0.3	2.1	1.6	1	0.2	0.5	0	0.4	1.1
3 Axle Vehicles	0	8	2	0	10	1	3	1	0	5	2	6	2	0	10	0	3	0	0	3	28
% 3 Axle Vehicles	0	0.5	0.9	0	0.4	0.2	0.3	0.2	0	0.2	0.4	0.3	0.7	0	0.3	0	0.2	0	0	0.1	0.3
4+ Axle Trucks	5	42	1	0	48	9	6	2	0	17	23	8	0	1	32	1	1	0	0	2	99
% 4+ Axle Trucks																					

	Milliken Avenue Southbound					4th Street Westbound					Milliken Avenue Northbound					4th Street Eastbound					
Start Time	Left	Thru	Right	RoR	App. Total	Left	Thru	Right	RoR	App. Total	Left	Thru	Right	RoR	App. Total	Left	Thru	Right	RoR	App. Total	Int. Total
Peak Hour Analysis From 04:00 PM to 05:45 PM - Peak 1 of 1																					
Peak Hour for Entire Intersection Begins at 04:45 PM																					
04:45 PM	97	200	35	0	332	67	122	75	3	267	55	260	44	36	395	88	137	**33**	17	275	1269
05:00 PM	**138**	**304**	**36**	**1**	**479**	**77**	127	76	**5**	**285**	**73**	249	**54**	34	410	74	**219**	28	22	**343**	**1517**
05:15 PM	134	254	34	0	422	66	119	**79**	3	267	64	**316**	48	47	**475**	**100**	183	30	**24**	337	1501
05:30 PM	99	216	33	0	348	77	**128**	64	5	274	65	311	43	41	460	89	136	27	14	266	1348
Total Volume	468	974	138	1	1581	287	496	294	16	1093	257	1136	189	158	1740	351	675	118	77	1221	5635
% App. Total	29.6	61.6	8.7	0.1		26.3	45.4	26.9	1.5		14.8	65.3	10.9	9.1		28.7	55.3	9.7	6.3		
PHF	.848	.801	.958	.250	.825	.932	.969	.930	.800	.959	.880	.899	.875	.840	.916	.878	.771	.894	.802	.890	.929

Counts Unlimited Inc.
25286 Jaclyn Avenue
Moreno Valley, CA 92557
951-485-7934

City of Rancho Cucamonga
N/S: Milliken Avenue
E/W: 4th Street
Weather: Sunny

File Name : RNCMI4PM
Site Code : 9150002
Start Date : 6/3/2009
Page No : 2

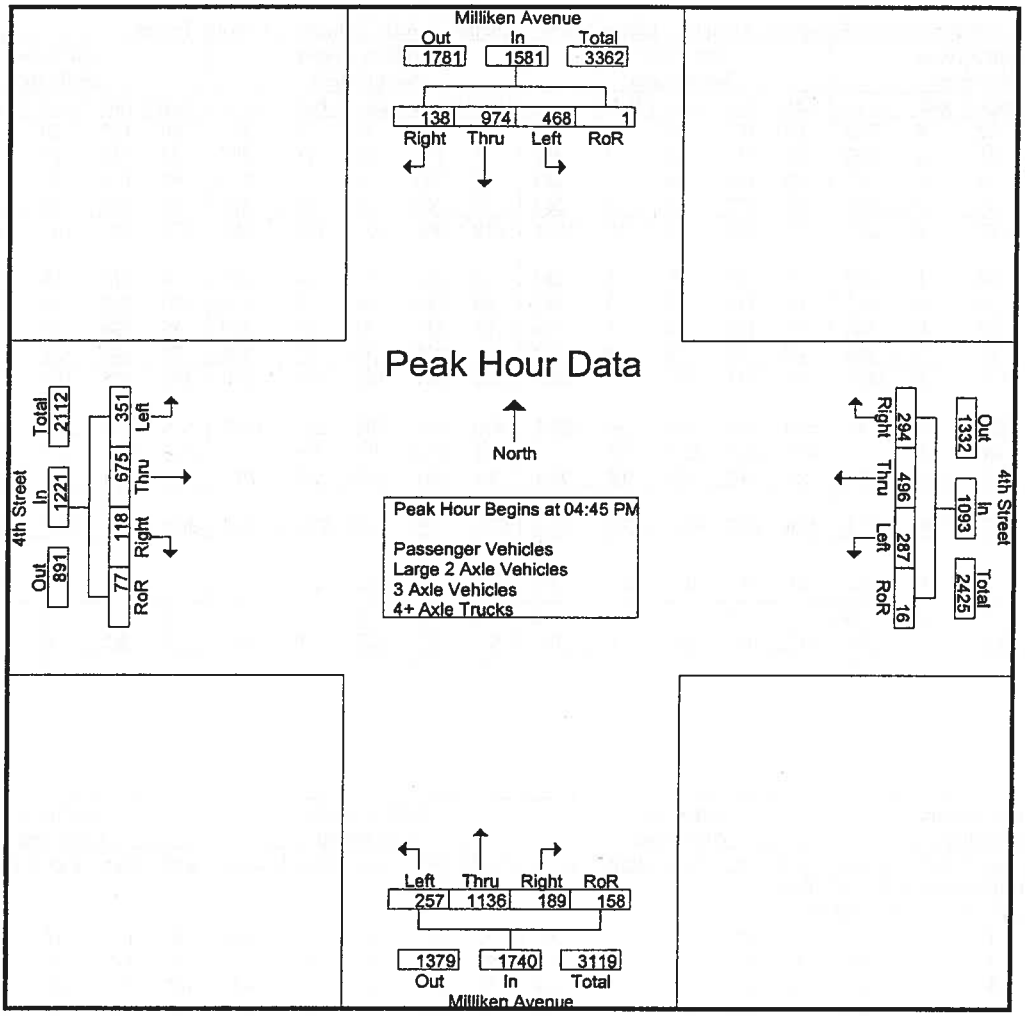

Peak Hour Analysis From 04:00 PM to 05:45 PM - Peak 1 of 1

Peak Hour for Each Approach Begins at:

	04:30 PM					04:30 PM					04:45 PM					04:30 PM				
+0 mins.	114	236	24	3	377	70	**139**	69	**5**	283	55	260	44	36	395	61	173	25	16	275
+15 mins.	97	200	35	0	332	67	122	75	3	267	**73**	249	**54**	34	410	88	137	**33**	17	275
+30 mins.	**138**	**304**	**36**	1	**479**	**77**	127	76	5	**285**	64	**316**	48	**47**	**475**	74	**219**	28	22	**343**
+45 mins.	134	254	34	0	422	66	119	**79**	3	267	65	311	43	41	460	**100**	183	30	**24**	337
Total Volume	483	994	129	4	1610	280	507	299	16	1102	257	1136	189	158	1740	323	712	116	79	1230
% App. Total	30	61.7	8	0.2		25.4	46	27.1	1.5		14.8	65.3	10.9	9.1		26.3	57.9	9.4	6.4	
PHF	.875	.817	.896	.333	.840	.909	.912	.946	.800	.967	.880	.899	.875	.840	.916	.808	.813	.879	.823	.897

Counts Unlimited Inc.
25286 Jaclyn Avenue
Moreno Valley, CA 92557
951-485-7934

City of Rancho Cucamonga
N/S: Milliken Avenue
E/W: 4th Street
Weather: Sunny

File Name : RNCMI4PM
Site Code : 9150002
Start Date : 6/3/2009
Page No : 1

Groups Printed- Passenger Vehicles

	Milliken Avenue Southbound					4th Street Westbound					Milliken Avenue Northbound					4th Street Eastbound					
Start Time	Left	Thru	Right	RoR	App. Total	Left	Thru	Right	RoR	App. Total	Left	Thru	Right	RoR	App. Total	Left	Thru	Right	RoR	App. Total	Int. Total
04:00 PM	83	210	22	4	319	63	104	48	4	219	47	215	14	36	312	69	131	20	11	231	1081
04:15 PM	81	168	30	0	279	63	118	62	3	246	38	188	33	26	285	58	125	24	19	226	1036
04:30 PM	111	222	23	3	359	68	137	66	5	276	62	236	36	30	364	61	173	25	16	275	1274
04:45 PM	97	192	35	0	324	66	121	74	3	264	49	257	42	34	382	88	135	33	17	273	1243
Total	372	792	110	7	1281	260	480	250	15	1005	196	896	125	126	1343	276	564	102	63	1005	4634
05:00 PM	137	298	35	1	471	71	120	76	5	272	54	246	54	33	387	71	217	28	22	338	1468
05:15 PM	133	244	34	0	411	64	117	78	2	261	58	313	48	46	465	99	182	30	24	335	1472
05:30 PM	96	202	33	0	331	73	126	64	5	268	62	309	42	41	454	89	136	27	14	266	1319
05:45 PM	66	115	18	7	206	48	82	36	8	174	47	252	16	36	351	77	146	27	16	266	997
Total	432	859	120	8	1419	256	445	254	20	975	221	1120	160	156	1657	336	681	112	76	1205	5256
Grand Total	804	1651	230	15	2700	516	925	504	35	1980	417	2016	285	282	3000	612	1245	214	139	2210	9890
Apprch %	29.8	61.1	8.5	0.6		26.1	46.7	25.5	1.8		13.9	67.2	9.5	9.4		27.7	56.3	9.7	6.3		
Total %	8.1	16.7	2.3	0.2	27.3	5.2	9.4	5.1	0.4	20	4.2	20.4	2.9	2.9	30.3	6.2	12.6	2.2	1.4	22.3	

	Milliken Avenue Southbound					4th Street Westbound					Milliken Avenue Northbound					4th Street Eastbound					
Start Time	Left	Thru	Right	RoR	App. Total		Thru	Right	RoR	App. Total		Thru	Right	RoR	App. Total		Thru	Right	RoR	App. Total	Int. Total
Peak Hour Analysis From 04:45 PM to 05:30 PM - Peak 1 of 1																					
Peak Hour for Entire Intersection Begins at 04:45 PM																					
04:45 PM	97	192	35	0	324	66	121	74	3	264	49	257	42	34	382	88	135	33	17	273	1243
05:00 PM	137	298	35	1	471	71	120	76	5	272	54	246	54	33	387	71	217	28	22	338	1468
05:15 PM	133	244	34	0	411	64	117	78	2	261	58	313	48	46	465	99	182	30	24	335	1472
05:30 PM	96	202	33	0	331	73	126	64	5	268	62	309	42	41	454	89	136	27	14	266	1319
Total Volume	463	936	137	1	1537	274	484	292	15	1065	223	1125	186	154	1688	347	670	118	77	1212	5502
% App. Total	30.1	60.9	8.9	0.1		25.7	45.4	27.4	1.4		13.2	66.6	11	9.1		28.6	55.3	9.7	6.4		
PHF	.845	.785	.979	.250	.816	.938	.960	.936	.750	.979	.899	.899	.861	.837	.908	.876	.772	.894	.802	.896	.934

Counts Unlimited Inc.
25286 Jaclyn Avenue
Moreno Valley, CA 92557
951-485-7934

City of Rancho Cucamonga
N/S: Milliken Avenue
E/W: 4th Street
Weather: Sunny

File Name : RNCMI4PM
Site Code : 9150002
Start Date : 6/3/2009
Page No : 2

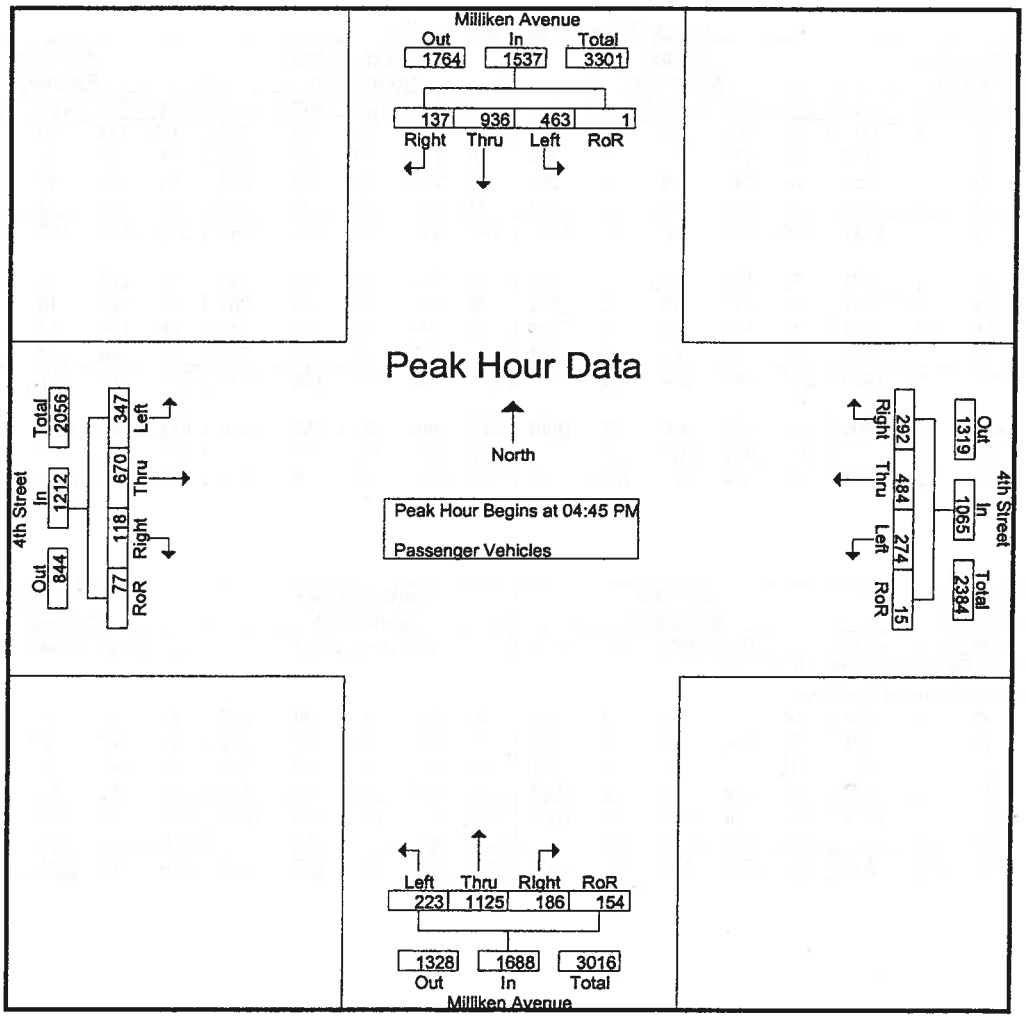

Peak Hour Analysis From 04:45 PM to 05:30 PM - Peak 1 of 1

Peak Hour for Each Approach Begins at:

	04:45 PM					04:45 PM					04:45 PM					04:45 PM				
+0 mins.	97	192	35	0	324	66	121	74	3	264	49	257	42	34	382	88	135	33	17	273
+15 mins.	137	298	35	1	471	71	120	76	5	272	54	246	54	33	387	71	217	28	22	338
+30 mins.	133	244	34	0	411	64	117	78	2	261	58	313	48	46	465	99	182	30	24	335
+45 mins.	96	202	33	0	331	73	126	64	5	268	62	309	42	41	454	89	136	27	14	266
Total Volume	463	936	137	1	1537	274	484	292	15	1065	223	1125	186	154	1688	347	670	118	77	1212
% App. Total	30.1	60.9	8.9	0.1		25.7	45.4	27.4	1.4		13.2	66.6	11	9.1		28.6	55.3	9.7	6.4	
PHF	.845	.785	.979	.250	.816	.938	.960	.936	.750	.979	.899	.899	.861	.837	.908	.876	.772	.894	.802	.896

Counts Unlimited Inc.
25286 Jaclyn Avenue
Moreno Valley, CA 92557
951-485-7934

City of Rancho Cucamonga
N/S: Milliken Avenue
E/W: 4th Street
Weather: Sunny

File Name : RNCMI4PM
Site Code : 9150002
Start Date : 6/3/2009
Page No : 1

Groups Printed- Large 2 Axle Vehicles

	Milliken Avenue Southbound					4th Street Westbound					Milliken Avenue Northbound					4th Street Eastbound					
Start Time	Left	Thru	Right	RoR	App. Total	Left	Thru	Right	RoR	App. Total	Left	Thru	Right	RoR	App. Total	Left	Thru	Right	RoR	App. Total	Int. Total
04:00 PM	0	1	0	0	1	2	0	0	0	2	1	1	0	0	2	0	1	0	0	1	6
04:15 PM	0	5	0	0	5	2	1	3	0	6	2	1	0	0	3	0	0	1	0	1	15
04:30 PM	1	4	0	0	5	1	0	3	0	4	4	1	0	0	5	0	0	0	0	0	14
04:45 PM	0	3	0	0	3	1	0	0	0	1	5	0	0	2	7	0	0	0	0	0	11
Total	1	13	0	0	14	6	1	6	0	13	12	3	0	2	17	0	1	1	0	2	46
05:00 PM	0	2	0	0	2	4	5	0	0	9	11	2	0	1	14	3	2	0	0	5	30
05:15 PM	1	3	0	0	4	0	0	1	1	2	4	1	0	1	6	1	0	0	0	1	13
05:30 PM	1	3	0	0	4	4	1	0	0	5	1	1	1	0	3	0	0	0	0	0	12
05:45 PM	0	0	0	0	0	0	0	0	0	0	6	0	0	2	8	2	0	0	0	2	10
Total	2	8	0	0	10	8	6	1	1	16	22	4	1	4	31	6	2	0	0	8	65
Grand Total	3	21	0	0	24	14	7	7	1	29	34	7	1	6	48	6	3	1	0	10	111
Apprch %	12.5	87.5	0	0		48.3	24.1	24.1	3.4		70.8	14.6	2.1	12.5		60	30	10	0		
Total %	2.7	18.9	0	0	21.6	12.6	6.3	6.3	0.9	26.1	30.6	6.3	0.9	5.4	43.2	5.4	2.7	0.9	0	9	

	Milliken Avenue Southbound					4th Street Westbound					Milliken Avenue Northbound					4th Street Eastbound					
Start Time	Left	Thru	Right	RoR	App. Total		Thru	Right	RoR	App. Total		Thru	Right	RoR	App. Total		Thru	Right	RoR	App. Total	Int. Total
Peak Hour Analysis From 04:45 PM to 05:30 PM - Peak 1 of 1																					
Peak Hour for Entire Intersection Begins at 04:45 PM																					
04:45 PM	0	3	0	0	3	1	0	0	0	1	5	0	0	2	7	0	0	0	0	0	11
05:00 PM	0	2	0	0	2	4	5	0	0	9	11	2	0	1	14	3	2	0	0	5	30
05:15 PM	1	3	0	0	4	0	0	1	1	2	4	1	0	1	6	1	0	0	0	1	13
05:30 PM	1	3	0	0	4	4	1	0	0	5	1	1	1	0	3	0	0	0	0	0	12
Total Volume	2	11	0	0	13	9	6	1	1	17	21	4	1	4	30	4	2	0	0	6	66
% App. Total	15.4	84.6	0	0		52.9	35.3	5.9	5.9		70	13.3	3.3	13.3		66.7	33.3	0	0		
PHF	.500	.917	.000	.000	.813	.563	.300	.250	.250	.472	.477	.500	.250	.500	.536	.333	.250	.000	.000	.300	.550

Counts Unlimited Inc.
25286 Jaclyn Avenue
Moreno Valley, CA 92557
951-485-7934

City of Rancho Cucamonga
N/S: Milliken Avenue
E/W: 4th Street
Weather: Sunny

File Name : RNCMI4PM
Site Code : 9150002
Start Date : 6/3/2009
Page No : 2

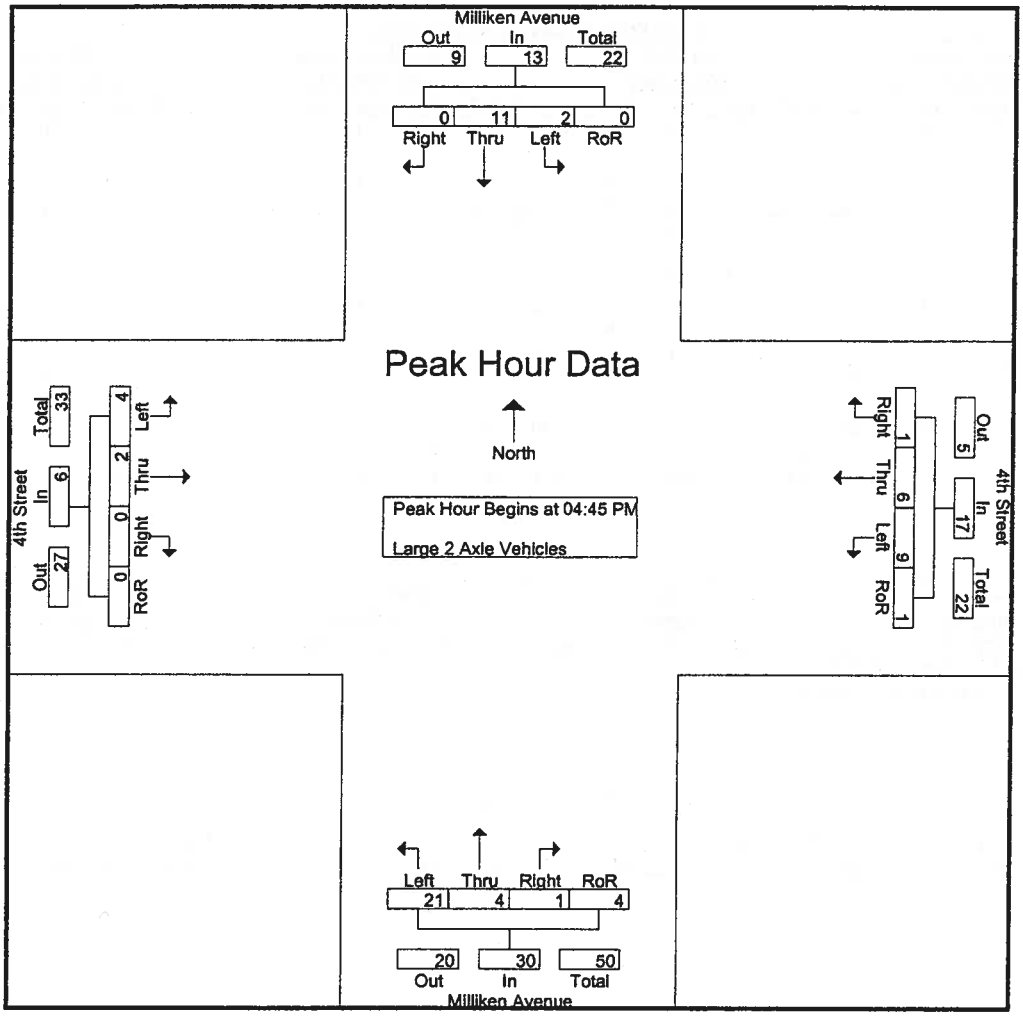

Peak Hour Analysis From 04:45 PM to 05:30 PM - Peak 1 of 1

Peak Hour for Each Approach Begins at:

	04:45 PM					04:45 PM					04:45 PM					04:45 PM				
+0 mins.	0	3	0	0	3	1	0	0	0	1	5	0	0	2	7	0	0	0	0	0
+15 mins.	0	2	0	0	2	4	5	0	0	9	11	2	0	1	14	3	2	0	0	5
+30 mins.	1	3	0	0	4	0	0	1	1	2	4	1	0	1	6	1	0	0	0	1
+45 mins.	1	3	0	0	4	4	1	0	0	5	1	1	1	0	3	0	0	0	0	0
Total Volume	2	11	0	0	13	9	6	1	1	17	21	4	1	4	30	4	2	0	0	6
% App. Total	15.4	84.6	0	0		52.9	35.3	5.9	5.9		70	13.3	3.3	13.3		66.7	33.3	0	0	
PHF	.500	.917	.000	.000	.813	.563	.300	.250	.250	.472	.477	.500	.250	.500	.536	.333	.250	.000	.000	.300

Counts Unlimited Inc.
25286 Jaclyn Avenue
Moreno Valley, CA 92557
951-485-7934

City of Rancho Cucamonga
N/S: Milliken Avenue
E/W: 4th Street
Weather: Sunny

File Name : RNCMI4PM
Site Code : 9150002
Start Date : 6/3/2009
Page No : 1

Groups Printed- 3 Axle Vehicles

	Milliken Avenue Southbound					4th Street Westbound					Milliken Avenue Northbound					4th Street Eastbound					
Start Time	Left	Thru	Right	RoR	App. Total	Left	Thru	Right	RoR	App. Total	Left	Thru	Right	RoR	App. Total	Left	Thru	Right	RoR	App. Total	Int. Total
04:00 PM	0	3	0	0	3	0	1	0	0	1	0	0	0	0	0	0	0	0	0	0	4
04:15 PM	0	0	0	0	0	0	0	0	0	0	0	2	0	0	2	0	0	0	0	0	2
04:30 PM	0	1	1	0	2	0	1	0	0	1	0	2	0	0	2	0	0	0	0	0	5
04:45 PM	0	0	0	0	0	0	0	1	0	1	0	0	2	0	2	0	1	0	0	1	4
Total	0	4	1	0	5	0	2	1	0	3	0	4	2	0	6	0	1	0	0	1	15
05:00 PM	0	0	1	0	1	0	1	0	0	1	2	0	0	0	2	0	0	0	0	0	4
05:15 PM	0	1	0	0	1	1	0	0	0	1	0	0	0	0	0	0	1	0	0	1	3
05:30 PM	0	3	0	0	3	0	0	0	0	0	0	0	0	0	0	0	0	0	0	0	3
05:45 PM	0	0	0	0	0	0	0	0	0	0	0	2	0	0	2	0	1	0	0	1	3
Total	0	4	1	0	5	1	1	0	0	2	2	2	0	0	4	0	2	0	0	2	13
Grand Total	0	8	2	0	10	1	3	1	0	5	2	6	2	0	10	0	3	0	0	3	28
Apprch %	0	80	20	0		20	60	20	0		20	60	20	0		0	100	0	0		
Total %	0	28.6	7.1	0	35.7	3.6	10.7	3.6	0	17.9	7.1	21.4	7.1	0	35.7	0	10.7	0	0	10.7	

	Milliken Avenue Southbound					4th Street Westbound					Milliken Avenue Northbound					4th Street Eastbound					
Start Time	Left	Thru	Right	RoR	App. Total		Thru	Right	RoR	App. Total		Thru	Right	RoR	App. Total		Thru	Right	RoR	App. Total	Int. Total
Peak Hour Analysis From 04:45 PM to 05:30 PM - Peak 1 of 1																					
Peak Hour for Entire Intersection Begins at 04:45 PM																					
04:45 PM	0	0	0	0	0	0	0	1	0	1	0	0	2	0	2	0	1	0	0	1	4
05:00 PM	0	0	1	0	1	0	1	0	0	1	2	0	0	0	2	0	0	0	0	0	4
05:15 PM	0	1	0	0	1	1	0	0	0	1	0	0	0	0	0	0	1	0	0	1	3
05:30 PM	0	3	0	0	3	0	0	0	0	0	0	0	0	0	0	0	0	0	0	0	3
Total Volume	0	4	1	0	5	1	1	1	0	3	2	0	2	0	4	0	2	0	0	2	14
% App. Total	0	80	20	0		33.3	33.3	33.3	0		50	0	50	0		0	100	0	0		
PHF	.000	.333	.250	.000	.417	.250	.250	.250	.000	.750	.250	.000	.250	.000	.500	.000	.500	.000	.000	.500	.875

Counts Unlimited Inc.
25286 Jaclyn Avenue
Moreno Valley, CA 92557
951-485-7934

City of Rancho Cucamonga
N/S: Milliken Avenue
E/W: 4th Street
Weather: Sunny

File Name : RNCMI4PM
Site Code : 9150002
Start Date : 6/3/2009
Page No : 2

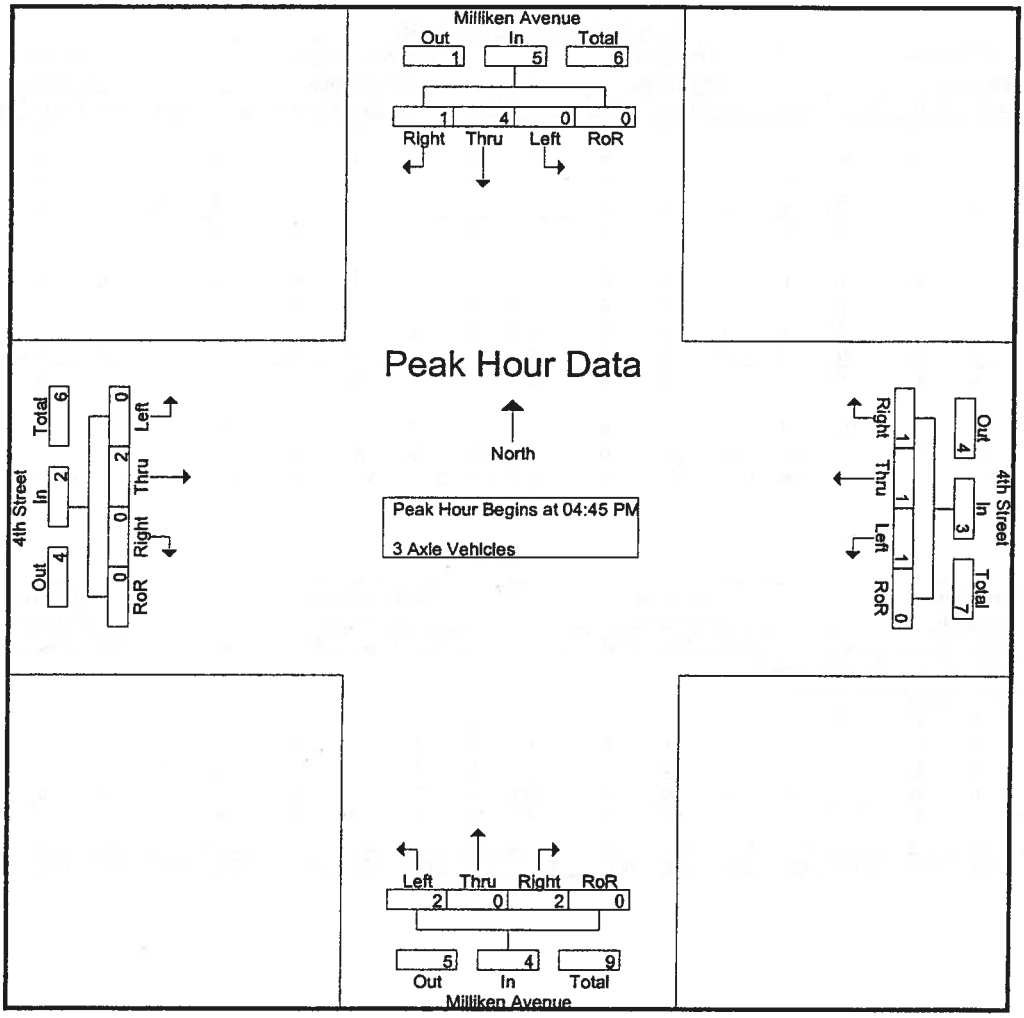

Peak Hour Analysis From 04:45 PM to 05:30 PM - Peak 1 of 1

Peak Hour for Each Approach Begins at:

	04:45 PM					04:45 PM					04:45 PM					04:45 PM				
+0 mins.	0	0	0	0	0	0	0	1	0	1	0	0	2	0	2	0	1	0	0	1
+15 mins.	0	0	1	0	1	0	1	0	0	1	2	0	0	0	2	0	0	0	0	0
+30 mins.	0	1	0	0	1	1	0	0	0	1	0	0	0	0	0	0	1	0	0	1
+45 mins.	0	3	0	0	3	0	0	0	0	0	0	0	0	0	0	0	0	0	0	0
Total Volume	0	4	1	0	5	1	1	1	0	3	2	0	2	0	4	0	2	0	0	2
% App. Total	0	80	20	0		33.3	33.3	33.3	0		50	0	50	0		0	100	0	0	
PHF	.000	.333	.250	.000	.417	.250	.250	.250	.000	.750	.250	.000	.250	.000	.500	.000	.500	.000	.000	.500

Counts Unlimited Inc.
25286 Jaclyn Avenue
Moreno Valley, CA 92557
951-485-7934

City of Rancho Cucamonga
N/S: Milliken Avenue
E/W: 4th Street
Weather: Sunny

File Name : RNCMI4PM
Site Code : 9150002
Start Date : 6/3/2009
Page No : 1

Groups Printed- 4+ Axle Trucks

	Milliken Avenue Southbound					4th Street Westbound					Milliken Avenue Northbound					4th Street Eastbound					
Start Time	Left	Thru	Right	RoR	App. Total	Left	Thru	Right	RoR	App. Total	Left	Thru	Right	RoR	App. Total	Left	Thru	Right	RoR	App. Total	Int. Total
04:00 PM	0	5	0	0	5	3	0	1	0	4	2	0	0	0	2	0	0	0	0	0	11
04:15 PM	0	5	1	0	6	2	0	1	0	3	5	0	0	0	5	1	0	0	0	1	15
04:30 PM	2	9	0	0	11	1	1	0	0	2	2	0	0	1	3	0	0	0	0	0	16
04:45 PM	0	5	0	0	5	0	1	0	0	1	1	3	0	0	4	0	1	0	0	1	11
Total	2	24	1	0	27	6	2	2	0	10	10	3	0	1	14	1	1	0	0	2	53
05:00 PM	1	4	0	0	5	2	1	0	0	3	6	1	0	0	7	0	0	0	0	0	15
05:15 PM	0	6	0	0	6	1	2	0	0	3	2	2	0	0	4	0	0	0	0	0	13
05:30 PM	2	8	0	0	10	0	1	0	0	1	2	1	0	0	3	0	0	0	0	0	14
05:45 PM	0	0	0	0	0	0	0	0	0	0	3	1	0	0	4	0	0	0	0	0	4
Total	3	18	0	0	21	3	4	0	0	7	13	5	0	0	18	0	0	0	0	0	46
Grand Total	5	42	1	0	48	9	6	2	0	17	23	8	0	1	32	1	1	0	0	2	99
Apprch %	10.4	87.5	2.1	0		52.9	35.3	11.8	0		71.9	25	0	3.1		50	50	0	0		
Total %	5.1	42.4	1	0	48.5	9.1	6.1	2	0	17.2	23.2	8.1	0	1	32.3	1	1	0	0	2	

	Milliken Avenue Southbound					4th Street Westbound					Milliken Avenue Northbound					4th Street Eastbound					
Start Time	Left	Thru	Right	RoR	App. Total		Thru	Right	RoR	App. Total		Thru	Right	RoR	App. Total		Thru	Right	RoR	App. Total	Int. Total
Peak Hour Analysis From 04:45 PM to 05:30 PM - Peak 1 of 1																					
Peak Hour for Entire Intersection Begins at 04:45 PM																					
04:45 PM	0	5	0	0	5	0	1	0	0	1	1	3	0	0	4	0	1	0	0	1	11
05:00 PM	1	4	0	0	5	2	1	0	0	3	6	1	0	0	7	0	0	0	0	0	15
05:15 PM	0	6	0	0	6	1	2	0	0	3	2	2	0	0	4	0	0	0	0	0	13
05:30 PM	2	8	0	0	10	0	1	0	0	1	2	1	0	0	3	0	0	0	0	0	14
Total Volume	3	23	0	0	26	3	5	0	0	8	11	7	0	0	18	0	1	0	0	1	53
% App. Total	11.5	88.5	0	0		37.5	62.5	0	0		61.1	38.9	0	0		0	100	0	0		
PHF	.375	.719	.000	.000	.650	.375	.625	.000	.000	.667	.458	.583	.000	.000	.643	.000	.250	.000	.000	.250	.883

Counts Unlimited Inc.
25286 Jaclyn Avenue
Moreno Valley, CA 92557
951-485-7934

City of Rancho Cucamonga
N/S: Milliken Avenue
E/W: 4th Street
Weather: Sunny

File Name : RNCMI4PM
Site Code : 9150002
Start Date : 6/3/2009
Page No : 2

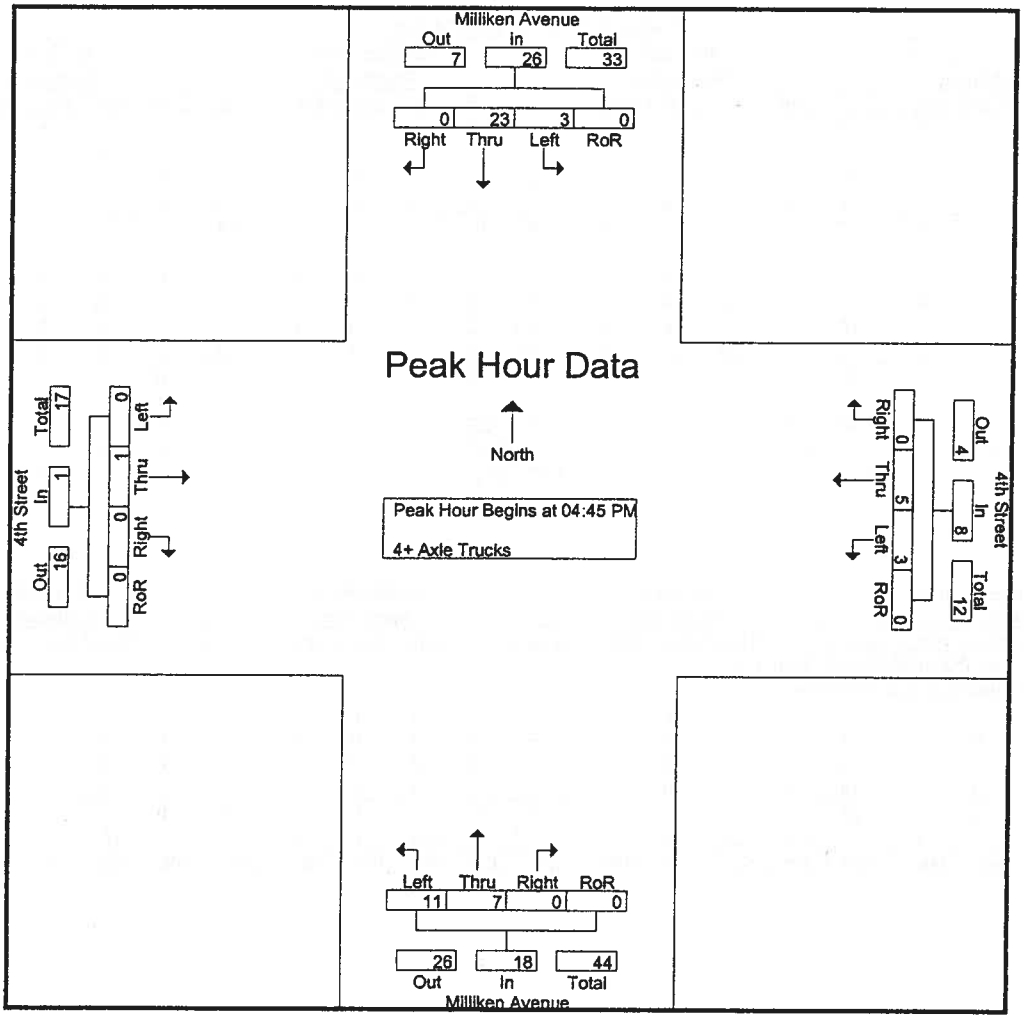

Peak Hour Analysis From 04:45 PM to 05:30 PM - Peak 1 of 1

Peak Hour for Each Approach Begins at:

	04:45 PM					04:45 PM					04:45 PM					04:45 PM				
+0 mins.	0	5	0	0	5	0	1	0	0	1	1	3	0	0	4	0	1	0	0	1
+15 mins.	1	4	0	0	5	2	1	0	0	3	6	1	0	0	7	0	0	0	0	0
+30 mins.	0	6	0	0	6	1	2	0	0	3	2	2	0	0	4	0	0	0	0	0
+45 mins.	2	8	0	0	10	0	1	0	0	1	2	1	0	0	3	0	0	0	0	0
Total Volume	3	23	0	0	26	3	5	0	0	8	11	7	0	0	18	0	1	0	0	1
% App. Total	11.5	88.5	0	0		37.5	62.5	0	0		61.1	38.9	0	0		0	100	0	0	
PHF	.375	.719	.000	.000	.650	.375	.625	.000	.000	.667	.458	.583	.000	.000	.643	.000	.250	.000	.000	.250

PASSENGER CAR EQUIVALENCY PEAK HOUR COUNT SUMMARY

INTERSECTION 19
Etiwanda Avenue (NS) / Baseline Road (EW)

AM PEAK HOUR

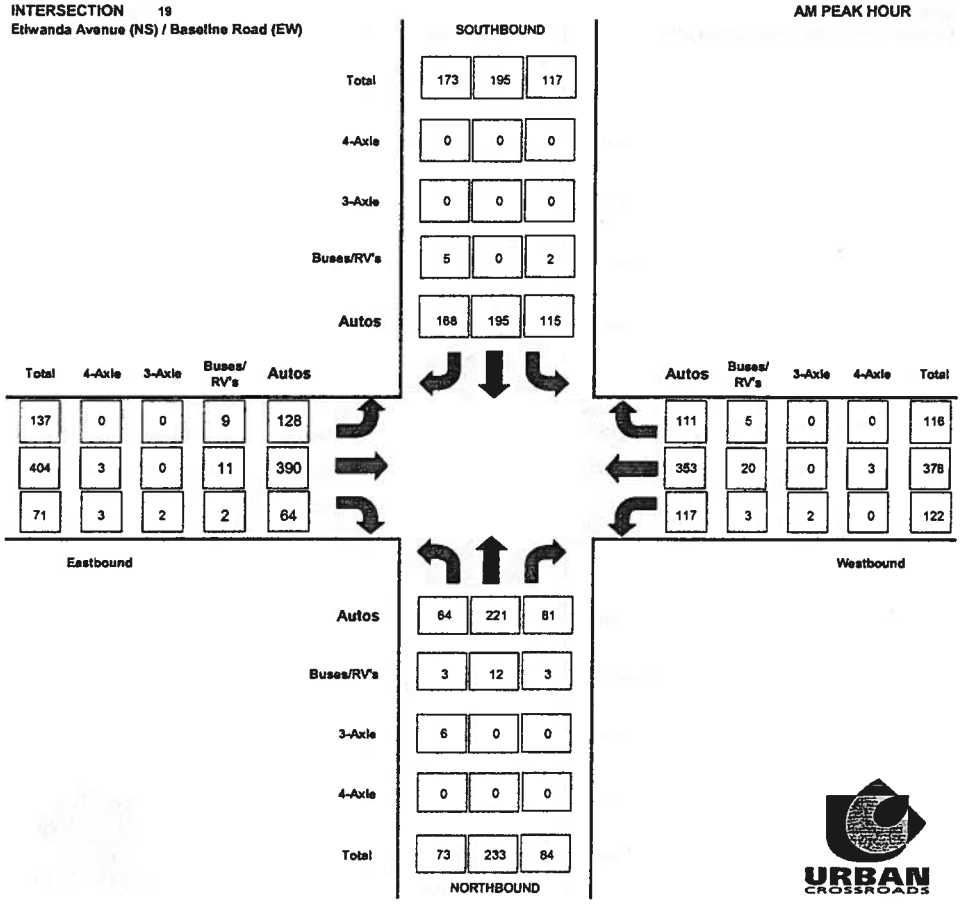

INTERSECTION 19
Etiwanda Avenue (NS) / Baseline Road (EW)

PM PEAK HOUR

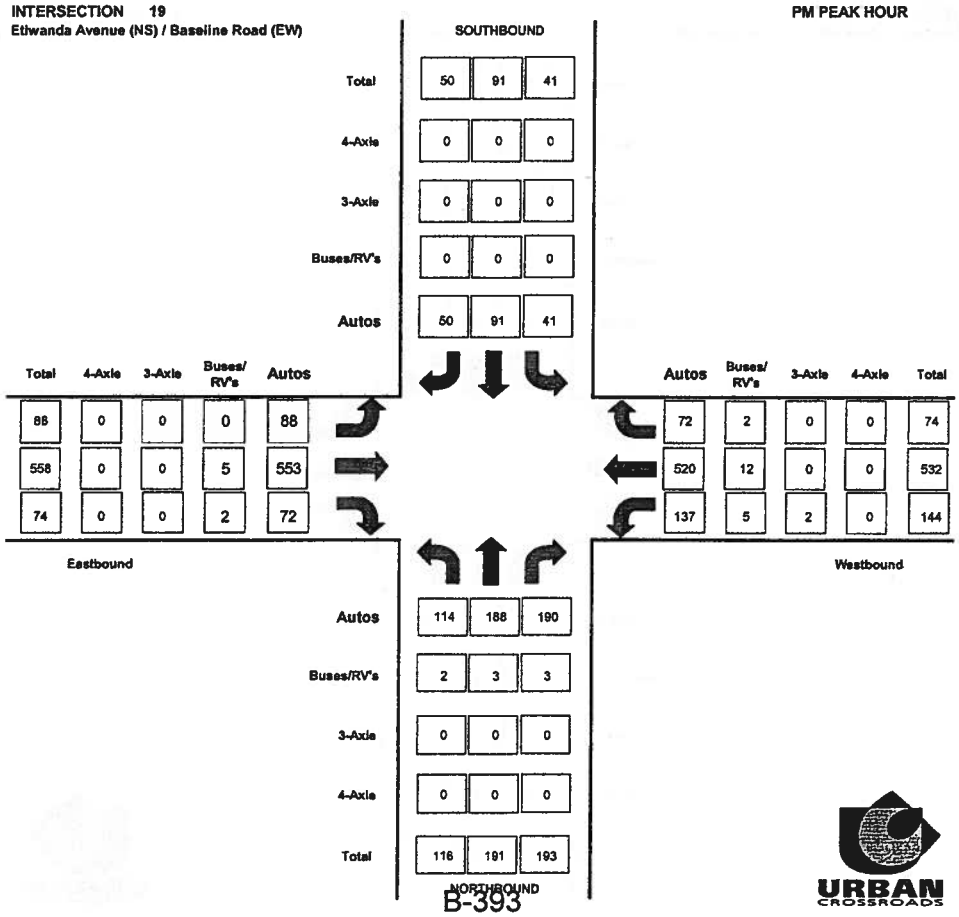

RAW PEAK HOUR COUNT SUMMARY

INTERSECTION 19
Etiwanda Avenue (NS) / Baseline Road (EW)

AM PEAK HOUR

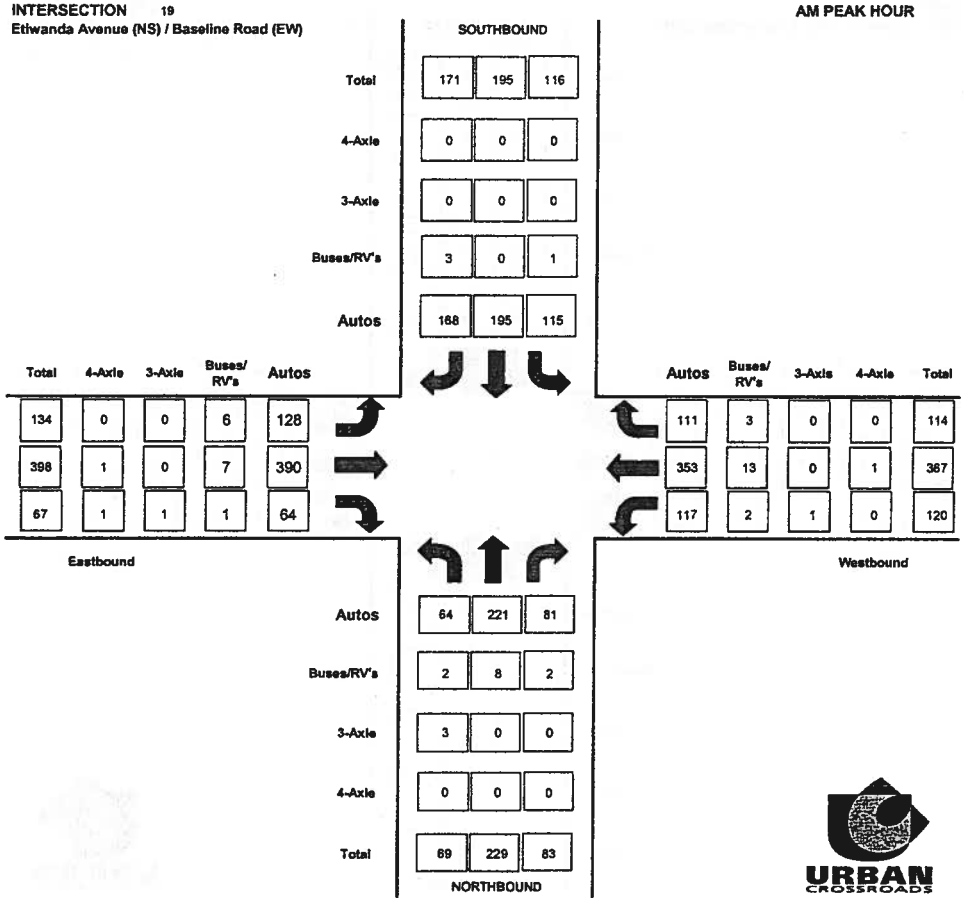

INTERSECTION 19
Etiwanda Avenue (NS) / Baseline Road (EW)

PM PEAK HOUR

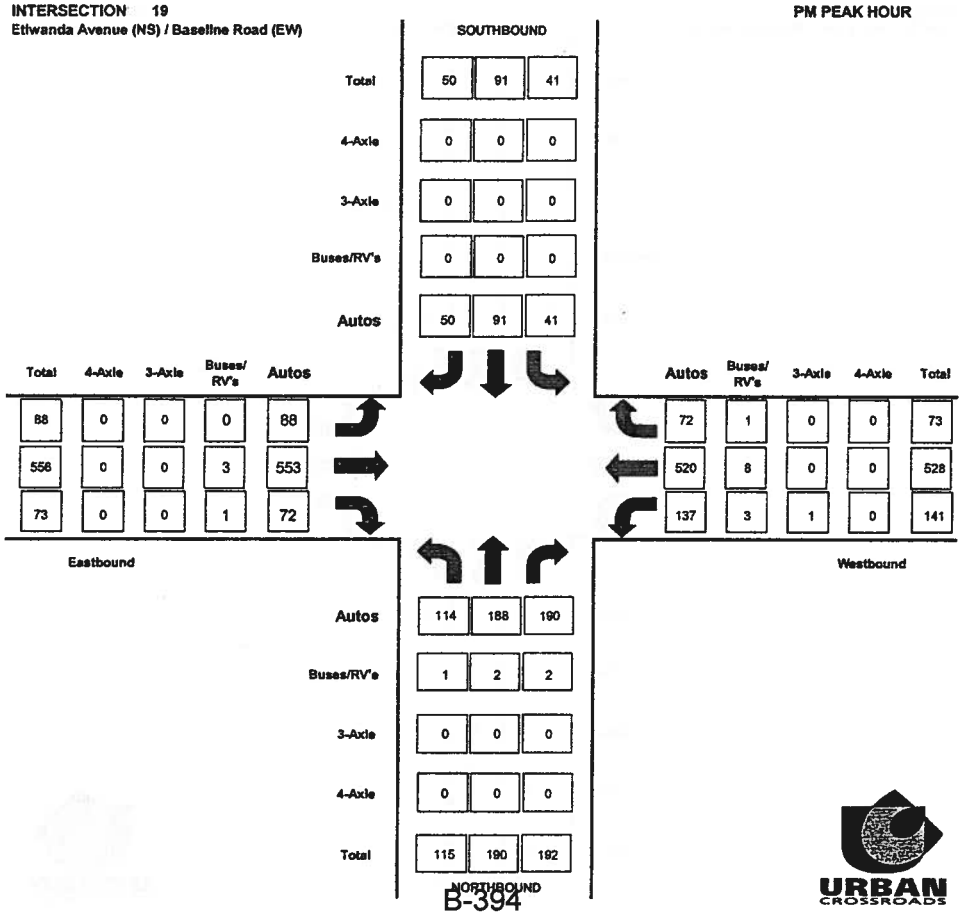

Counts Unlimited Inc.
25286 Jaclyn Avenue
Moreno Valley, CA 92557
951-485-7934

City of Rancho Cucamonga
N/S: Etiwanda Avenue
E/W: Baseline Road
Weather: Sunny

File Name : RNCETBAAM
Site Code : 9150022
Start Date : 6/2/2009
Page No : 1

Groups Printed- Passenger Vehicles - Large 2 Axle Vehicles - 3 Axle Vehicles - 4+ Axle Trucks

	Etiwanda Avenue Southbound					Baseline Road Westbound					Etiwanda Avenue Northbound					Baseline Road Eastbound					
Start Time	Left	Thru	Right	RoR	App. Total	Left	Thru	Right	RoR	App. Total	Left	Thru	Right	RoR	App. Total	Left	Thru	Right	RoR	App. Total	Int. Total
07:00 AM	28	31	26	9	94	22	79	26	14	141	12	54	6	6	78	46	74	7	7	134	447
07:15 AM	44	63	54	33	194	18	96	20	22	156	30	66	7	10	113	52	92	11	3	158	621
07:30 AM	16	47	20	7	90	40	89	11	5	145	8	38	16	14	76	15	118	18	4	155	466
07:45 AM	28	54	14	8	104	40	103	8	8	159	19	71	8	16	114	21	114	14	3	152	529
Total	116	195	114	57	482	120	367	65	49	601	69	229	37	46	381	134	398	50	17	599	2063
08:00 AM	21	63	16	15	115	42	82	13	4	141	12	25	7	5	49	11	79	20	11	121	426
08:15 AM	35	49	16	2	102	20	96	55	14	185	14	61	9	9	93	23	115	12	6	156	536
08:30 AM	63	61	17	13	154	18	82	51	16	167	13	39	6	6	64	10	89	6	4	109	494
08:45 AM	19	16	6	3	44	14	84	7	3	108	9	19	9	14	51	6	82	10	4	102	305
Total	138	189	55	33	415	94	344	126	37	601	48	144	31	34	257	50	365	48	25	488	1761
Grand Total	254	384	169	90	897	214	711	191	86	1202	117	373	68	80	638	184	763	98	42	1087	3824
Apprch %	28.3	42.8	18.8	10		17.8	59.2	15.9	7.2		18.3	58.5	10.7	12.5		16.9	70.2	9	3.9		
Total %	6.6	10	4.4	2.4	23.5	5.6	18.6	5	2.2	31.4	3.1	9.8	1.8	2.1	16.7	4.8	20	2.6	1.1	28.4	
Passenger Vehicles																					
% Passenger Vehicles	98.8	99.7	97	98.9	98.9	98.1	95.6	97.9	97.7	96.6	93.2	97.3	98.5	95	96.4	95.7	97.2	92.9	97.6	96.6	97.1
Large 2 Axle Vehicles																					
% Large 2 Axle Vehicles	1.2	0.3	3	1.1	1.1	1.4	3.7	2.1	2.3	2.9	2.6	2.7	1.5	5	2.8	4.3	2.5	4.1	0	2.9	2.5
3 Axle Vehicles	0	0	0	0	0	1	3	0	0	4	4	0	0	0	4	0	0	2	1	3	11
% 3 Axle Vehicles	0	0	0	0	0	0.5	0.4	0	0	0.3	3.4	0	0	0	0.6	0	0	2	2.4	0.3	0.3
4+ Axle Trucks	0	0	0	0	0	0	2	0	0	2	1	0	0	0	1	0	2	1	0	3	6
% 4+ Axle Trucks																					

	Etiwanda Avenue Southbound					Baseline Road Westbound					Etiwanda Avenue Northbound					Baseline Road Eastbound					
Start Time	Left	Thru	Right	RoR	App. Total	Left	Thru	Right	RoR	App. Total	Left	Thru	Right	RoR	App. Total	Left	Thru	Right	RoR	App. Total	Int. Total
Peak Hour Analysis From 07:00 AM to 08:45 AM - Peak 1 of 1																					
Peak Hour for Entire Intersection Begins at 07:00 AM																					
07:00 AM	28	31	26	9	94	22	79	**26**	14	141	12	54	6	6	78	46	74	7	7	134	447
07:15 AM	**44**	**63**	**54**	**33**	**194**	18	96	20	**22**	156	**30**	66	7	10	113	**52**	92	11	3	**158**	**621**
07:30 AM	16	47	20	7	90	**40**	89	11	5	145	8	38	**16**	14	76	15	**118**	**18**	4	155	466
07:45 AM	28	54	14	8	104	40	**103**	8	8	**159**	19	**71**	8	**16**	**114**	21	114	14	3	152	529
Total Volume	116	195	114	57	482	120	367	65	49	601	69	229	37	46	381	134	398	50	17	599	2063
% App. Total	24.1	40.5	23.7	11.8		20	61.1	10.8	8.2		18.1	60.1	9.7	12.1		22.4	66.4	8.3	2.8		
PHF	.659	.774	.528	.432	.621	.750	.891	.625	.557	.945	.575	.806	.578	.719	.836	.644	.843	.694	.607	.948	.831

Counts Unlimited Inc.
25286 Jaclyn Avenue
Moreno Valley, CA 92557
951-485-7934

City of Rancho Cucamonga
N/S: Etiwanda Avenue
E/W: Baseline Road
Weather: Sunny

File Name : RNCETBAAM
Site Code : 9150022
Start Date : 6/2/2009
Page No : 2

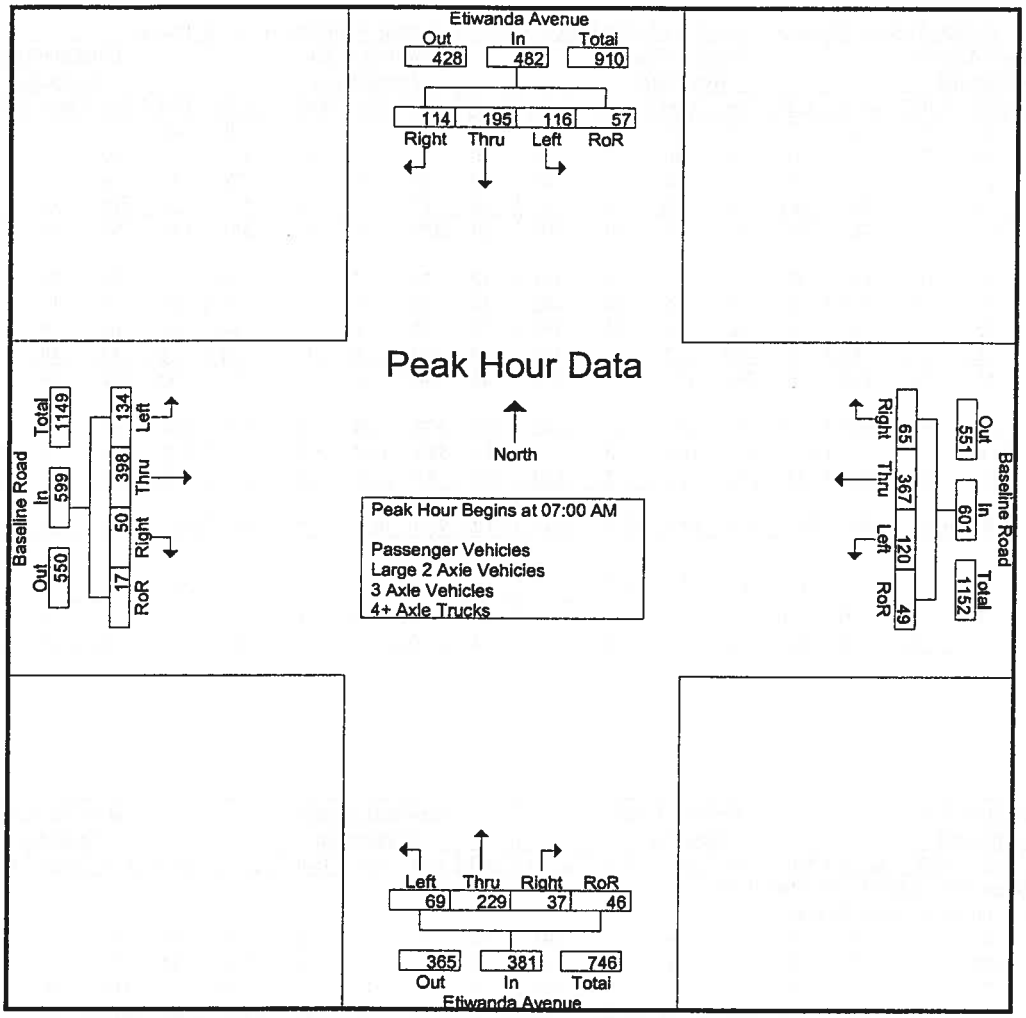

Peak Hour Analysis From 07:00 AM to 08:45 AM - Peak 1 of 1

Peak Hour for Each Approach Begins at:

	07:15 AM					07:45 AM					07:00 AM					07:00 AM				
+0 mins.	**44**	**63**	**54**	**33**	**194**	40	**103**	8	8	159	12	54	6	6	78	46	74	7	**7**	134
+15 mins.	16	47	20	7	90	**42**	82	13	4	141	**30**	66	7	10	113	**52**	92	11	3	**158**
+30 mins.	28	54	14	8	104	20	96	**55**	14	**185**	8	38	**16**	14	76	15	**118**	**18**	4	155
+45 mins.	21	63	16	15	115	18	82	51	**16**	167	19	71	8	**16**	**114**	21	114	14	3	152
Total Volume	109	227	104	63	503	120	363	127	42	652	69	229	37	46	381	134	398	50	17	599
% App. Total	21.7	45.1	20.7	12.5		18.4	55.7	19.5	6.4		18.1	60.1	9.7	12.1		22.4	66.4	8.3	2.8	
PHF	.619	.901	.481	.477	.648	.714	.881	.577	.656	.881	.575	.806	.578	.719	.836	.644	.843	.694	.607	.948

Counts Unlimited Inc.
25286 Jaclyn Avenue
Moreno Valley, CA 92557
951-485-7934

City of Rancho Cucamonga
N/S: Etiwanda Avenue
E/W: Baseline Road
Weather: Sunny

File Name : RNCETBAAM
Site Code : 9150022
Start Date : 6/2/2009
Page No : 1

Groups Printed- Passenger Vehicles

	Etiwanda Avenue Southbound					Baseline Road Westbound					Etiwanda Avenue Northbound					Baseline Road Eastbound					
Start Time	Left	Thru	Right	RoR	App. Total	Left	Thru	Right	RoR	App. Total	Left	Thru	Right	RoR	App. Total	Left	Thru	Right	RoR	App. Total	Int. Total
07:00 AM	27	31	25	9	92	21	75	24	13	133	8	48	6	6	68	43	72	6	7	128	421
07:15 AM	44	63	53	33	193	17	93	20	22	152	30	66	7	10	113	51	91	11	3	156	614
07:30 AM	16	47	19	7	89	39	87	11	5	142	8	37	16	13	74	14	115	17	4	150	455
07:45 AM	28	54	14	8	104	40	98	8	8	154	18	70	8	15	111	20	112	13	3	148	517
Total	115	195	111	57	478	117	353	63	48	581	64	221	37	44	366	128	390	47	17	582	2007
08:00 AM	21	63	15	14	113	42	80	13	3	138	12	24	7	5	48	10	73	17	11	111	410
08:15 AM	35	49	16	2	102	19	92	53	14	178	14	60	8	9	91	23	113	12	6	154	525
08:30 AM	62	61	16	13	152	18	76	51	16	161	11	39	6	6	62	9	85	6	4	104	479
08:45 AM	18	15	6	3	42	14	79	7	3	103	8	19	9	12	48	6	81	9	3	99	292
Total	136	188	53	32	409	93	327	124	36	580	45	142	30	32	249	48	352	44	24	468	1706
Grand Total	251	383	164	89	887	210	680	187	84	1161	109	363	67	76	615	176	742	91	41	1050	3713
Apprch %	28.3	43.2	18.5	10		18.1	58.6	16.1	7.2		17.7	59	10.9	12.4		16.8	70.7	8.7	3.9		
Total %	6.8	10.3	4.4	2.4	23.9	5.7	18.3	5	2.3	31.3	2.9	9.8	1.8	2	16.6	4.7	20	2.5	1.1	28.3	

	Etiwanda Avenue Southbound					Baseline Road Westbound					Etiwanda Avenue Northbound					Baseline Road Eastbound					
Start Time	Left	Thru	Right	RoR	App. Total		Thru	Right	RoR	App. Total		Thru	Right	RoR	App. Total		Thru	Right	RoR	App. Total	Int. Total
Peak Hour Analysis From 07:00 AM to 07:45 AM - Peak 1 of 1																					
Peak Hour for Entire Intersection Begins at 07:00 AM																					
07:00 AM	27	31	25	9	92	21	75	**24**	13	133	8	48	6	6	68	43	72	6	7	128	421
07:15 AM	**44**	**63**	**53**	**33**	**193**	17	93	20	**22**	152	**30**	66	7	10	**113**	**51**	91	11	3	**156**	**614**
07:30 AM	16	47	19	7	89	39	87	11	5	142	8	37	**16**	13	74	14	**115**	**17**	4	150	455
07:45 AM	28	54	14	8	104	**40**	**98**	8	8	**154**	18	**70**	8	**15**	111	20	112	13	3	148	517
Total Volume	115	195	111	57	478	117	353	63	48	581	64	221	37	44	366	128	390	47	17	582	2007
% App. Total	24.1	40.8	23.2	11.9		20.1	60.8	10.8	8.3		17.5	60.4	10.1	12		22	67	8.1	2.9		
PHF	.653	.774	.524	.432	.619	.731	.901	.656	.545	.943	.533	.789	.578	.733	.810	.627	.848	.691	.607	.933	.817

Counts Unlimited Inc.
25286 Jaclyn Avenue
Moreno Valley, CA 92557
951-485-7934

City of Rancho Cucamonga
N/S: Etiwanda Avenue
E/W: Baseline Road
Weather: Sunny

File Name : RNCETBAAM
Site Code : 9150022
Start Date : 6/2/2009
Page No : 2

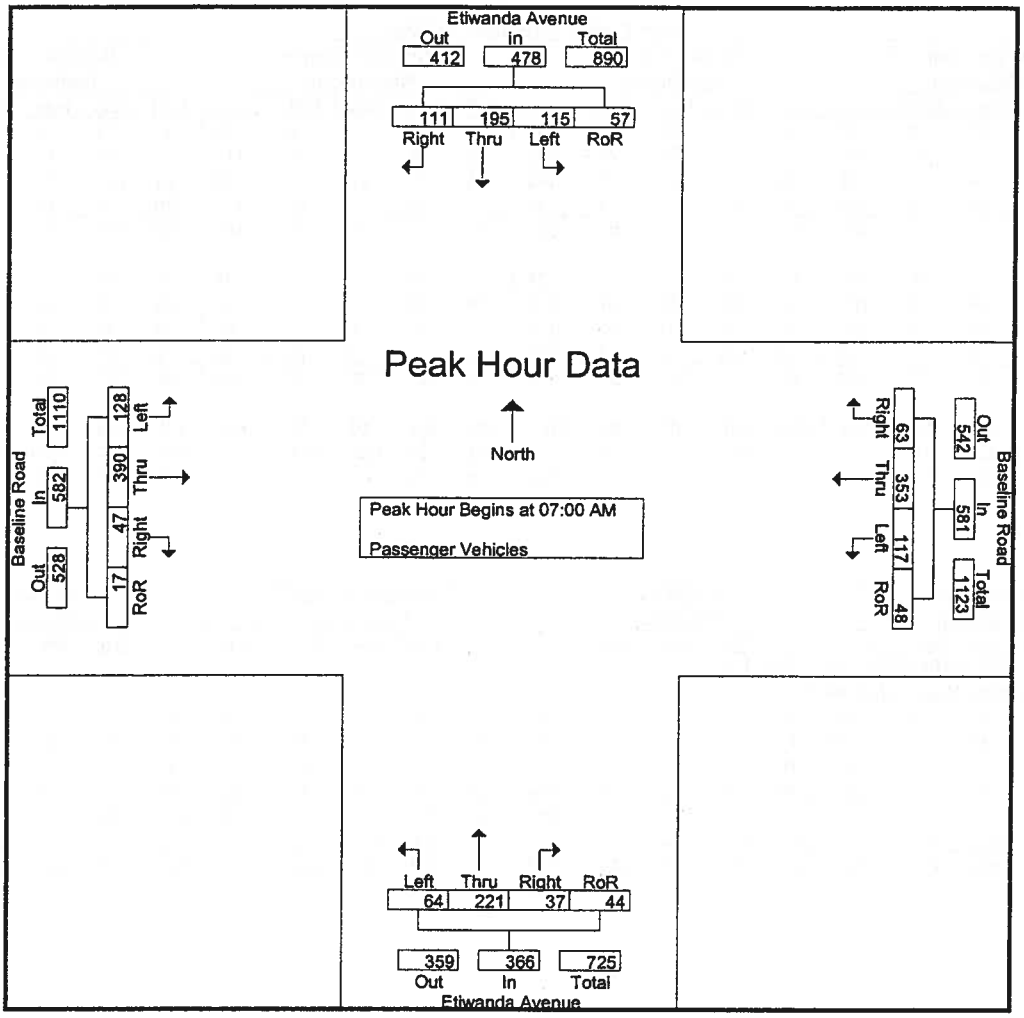

Peak Hour Analysis From 07:00 AM to 07:45 AM - Peak 1 of 1

Peak Hour for Each Approach Begins at:

	07:00 AM					07:00 AM					07:00 AM					07:00 AM				
+0 mins.	27	31	25	9	92	21	75	**24**	13	133	8	48	6	6	68	43	72	6	**7**	128
+15 mins.	**44**	**63**	**53**	**33**	**193**	17	93	20	**22**	152	**30**	66	7	10	**113**	**51**	91	11	**3**	**156**
+30 mins.	16	47	19	7	89	39	87	11	5	142	8	37	**16**	13	74	14	**115**	**17**	**4**	150
+45 mins.	28	54	14	8	104	**40**	**98**	8	8	**154**	18	**70**	8	**15**	111	20	112	13	**3**	148
Total Volume	115	195	111	57	478	117	353	63	48	581	64	221	37	44	366	128	390	47	17	582
% App. Total	24.1	40.8	23.2	11.9		20.1	60.8	10.8	8.3		17.5	60.4	10.1	12		22	67	8.1	2.9	
PHF	.653	.774	.524	.432	.619	.731	.901	.656	.545	.943	.533	.789	.578	.733	.810	.627	.848	.691	.607	.933

Counts Unlimited Inc.
25286 Jaclyn Avenue
Moreno Valley, CA 92557
951-485-7934

City of Rancho Cucamonga
N/S: Etiwanda Avenue
E/W: Baseline Road
Weather: Sunny

File Name : RNCETBAAM
Site Code : 9150022
Start Date : 6/2/2009
Page No : 1

Groups Printed- Large 2 Axle Vehicles

	Etiwanda Avenue Southbound					Baseline Road Westbound					Etiwanda Avenue Northbound					Baseline Road Eastbound					
Start Time	Left	Thru	Right	RoR	App. Total	Left	Thru	Right	RoR	App. Total	Left	Thru	Right	RoR	App. Total	Left	Thru	Right	RoR	App. Total	Int. Total
07:00 AM	1	0	1	0	2	1	3	2	1	7	1	6	0	0	7	3	2	0	0	5	21
07:15 AM	0	0	1	0	1	0	3	0	0	3	0	0	0	0	0	1	0	0	0	1	5
07:30 AM	0	0	1	0	1	1	2	0	0	3	0	1	0	1	2	1	3	1	0	5	11
07:45 AM	0	0	0	0	0	0	5	0	0	5	1	1	0	1	3	1	2	0	0	3	11
Total	1	0	3	0	4	2	13	2	1	18	2	8	0	2	12	6	7	1	0	14	48
08:00 AM	0	0	1	1	2	0	2	0	1	3	0	1	0	0	1	1	5	2	0	8	14
08:15 AM	0	0	0	0	0	1	3	2	0	6	0	1	1	0	2	0	2	0	0	2	10
08:30 AM	1	0	1	0	2	0	4	0	0	4	1	0	0	0	1	1	4	0	0	5	12
08:45 AM	1	1	0	0	2	0	4	0	0	4	0	0	0	2	2	0	1	1	0	2	10
Total	2	1	2	1	6	1	13	2	1	17	1	2	1	2	6	2	12	3	0	17	46
Grand Total	3	1	5	1	10	3	26	4	2	35	3	10	1	4	18	8	19	4	0	31	94
Apprch %	30	10	50	10		8.6	74.3	11.4	5.7		16.7	55.6	5.6	22.2		25.8	61.3	12.9	0		
Total %	3.2	1.1	5.3	1.1	10.6	3.2	27.7	4.3	2.1	37.2	3.2	10.6	1.1	4.3	19.1	8.5	20.2	4.3	0	33	

	Etiwanda Avenue Southbound					Baseline Road Westbound					Etiwanda Avenue Northbound					Baseline Road Eastbound					
Start Time	Left	Thru	Right	RoR	App. Total		Thru	Right	RoR	App. Total		Thru	Right	RoR	App. Total		Thru	Right	RoR	App. Total	Int. Total
Peak Hour Analysis From 07:00 AM to 07:45 AM - Peak 1 of 1																					
Peak Hour for Entire Intersection Begins at 07:00 AM																					
07:00 AM	1	0	1	0	2	1	3	2	1	7	1	6	0	0	7	3	2	0	0	5	21
07:15 AM	0	0	1	0	1	0	3	0	0	3	0	0	0	0	0	1	0	0	0	1	5
07:30 AM	0	0	1	0	1	1	2	0	0	3	0	1	0	1	2	1	3	1	0	5	11
07:45 AM	0	0	0	0	0	0	5	0	0	5	1	1	0	1	3	1	2	0	0	3	11
Total Volume	1	0	3	0	4	2	13	2	1	18	2	8	0	2	12	6	7	1	0	14	48
% App. Total	25	0	75	0		11.1	72.2	11.1	5.6		16.7	66.7	0	16.7		42.9	50	7.1	0		
PHF	.250	.000	.750	.000	.500	.500	.650	.250	.250	.643	.500	.333	.000	.500	.429	.500	.583	.250	.000	.700	.571

Counts Unlimited Inc.
25286 Jaclyn Avenue
Moreno Valley, CA 92557
951-485-7934

City of Rancho Cucamonga
N/S: Etiwanda Avenue
E/W: Baseline Road
Weather: Sunny

File Name : RNCETBAAM
Site Code : 9150022
Start Date : 6/2/2009
Page No : 2

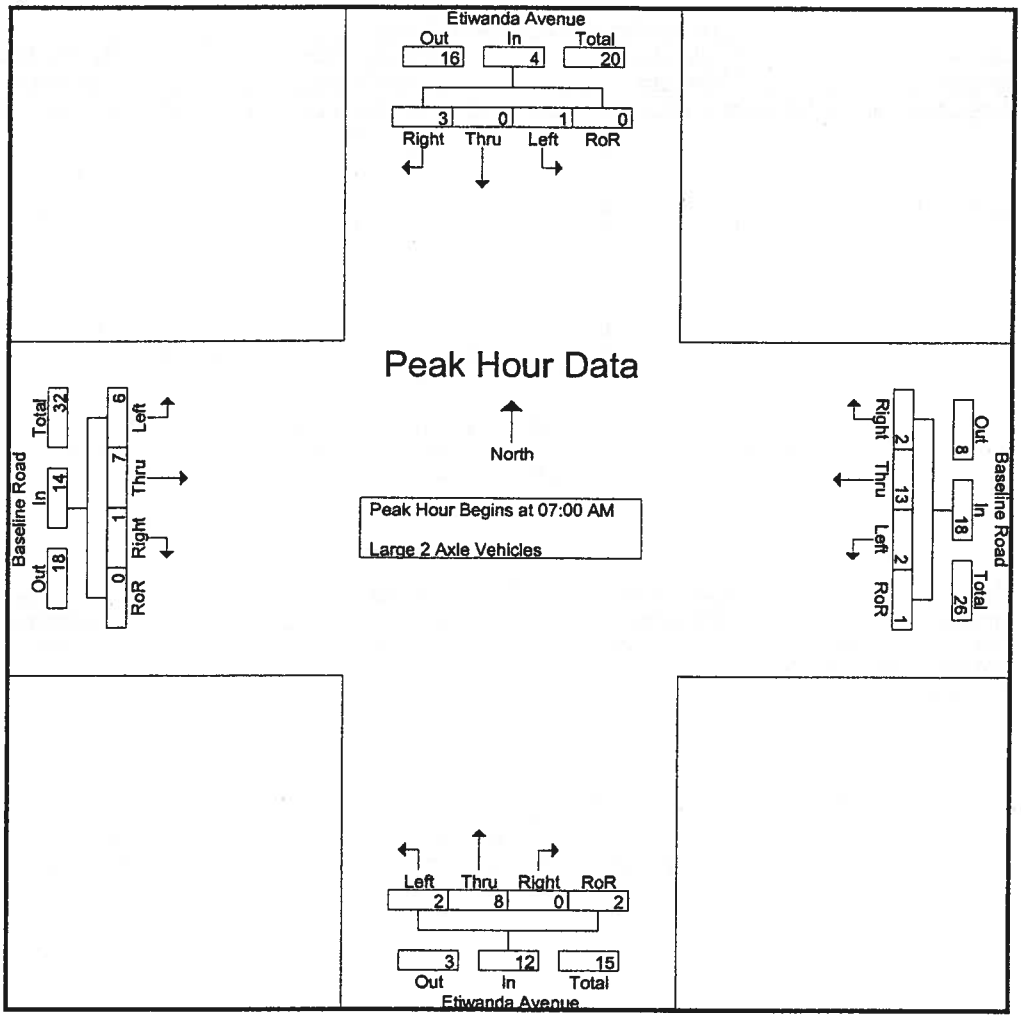

Peak Hour Analysis From 07:00 AM to 07:45 AM - Peak 1 of 1

Peak Hour for Each Approach Begins at:

	07:00 AM					07:00 AM					07:00 AM					07:00 AM				
+0 mins.	1	0	1	0	2	1	3	2	1	7	1	6	0	0	7	3	2	0	0	5
+15 mins.	0	0	1	0	1	0	3	0	0	3	0	0	0	0	0	1	0	0	0	1
+30 mins.	0	0	1	0	1	1	2	0	0	3	0	1	0	1	2	1	3	1	0	5
+45 mins.	0	0	0	0	0	0	5	0	0	5	1	1	0	1	3	1	2	0	0	3
Total Volume	1	0	3	0	4	2	13	2	1	18	2	8	0	2	12	6	7	1	0	14
% App. Total	25	0	75	0		11.1	72.2	11.1	5.6		16.7	66.7	0	16.7		42.9	50	7.1	0	
PHF	.250	.000	.750	.000	.500	.500	.650	.250	.250	.643	.500	.333	.000	.500	.429	.500	.583	.250	.000	.700

Counts Unlimited Inc.
25286 Jaclyn Avenue
Moreno Valley, CA 92557
951-485-7934

City of Rancho Cucamonga
N/S: Etiwanda Avenue
E/W: Baseline Road
Weather: Sunny

File Name : RNCETBAAM
Site Code : 9150022
Start Date : 6/2/2009
Page No : 1

Groups Printed- 3 Axle Vehicles

	Etiwanda Avenue Southbound					Baseline Road Westbound					Etiwanda Avenue Northbound					Baseline Road Eastbound					
Start Time	Left	Thru	Right	RoR	App. Total	Left	Thru	Right	RoR	App. Total	Left	Thru	Right	RoR	App. Total	Left	Thru	Right	RoR	App. Total	Int. Total
07:00 AM	0	0	0	0	0	0	0	0	0	0	3	0	0	0	3	0	0	1	0	1	4
07:15 AM	0	0	0	0	0	1	0	0	0	1	0	0	0	0	0	0	0	0	0	0	1
07:30 AM	0	0	0	0	0	0	0	0	0	0	0	0	0	0	0	0	0	0	0	0	0
07:45 AM	0	0	0	0	0	0	0	0	0	0	0	0	0	0	0	0	0	0	0	0	0
Total	0	0	0	0	0	1	0	0	0	1	3	0	0	0	3	0	0	1	0	1	5
08:00 AM	0	0	0	0	0	0	0	0	0	0	0	0	0	0	0	0	0	1	0	1	1
08:15 AM	0	0	0	0	0	0	0	0	0	0	0	0	0	0	0	0	0	0	0	0	0
08:30 AM	0	0	0	0	0	0	2	0	0	2	1	0	0	0	1	0	0	0	0	0	3
08:45 AM	0	0	0	0	0	0	1	0	0	1	0	0	0	0	0	0	0	0	1	1	2
Total	0	0	0	0	0	0	3	0	0	3	1	0	0	0	1	0	0	1	1	2	6
Grand Total	0	0	0	0	0	1	3	0	0	4	4	0	0	0	4	0	0	2	1	3	11
Apprch %	0	0	0	0		25	75	0	0		100	0	0	0		0	0	66.7	33.3		
Total %	0	0	0	0	0	9.1	27.3	0	0	36.4	36.4	0	0	0	36.4	0	0	18.2	9.1	27.3	

	Etiwanda Avenue Southbound					Baseline Road Westbound					Etiwanda Avenue Northbound					Baseline Road Eastbound					
Start Time	Left	Thru	Right	RoR	App. Total		Thru	Right	RoR	App. Total		Thru	Right	RoR	App. Total		Thru	Right	RoR	App. Total	Int. Total
Peak Hour Analysis From 07:00 AM to 07:45 AM - Peak 1 of 1																					
Peak Hour for Entire Intersection Begins at 07:00 AM																					
07:00 AM	0	0	0	0	0	0	0	0	0	0	3	0	0	0	3	0	0	1	0	1	4
07:15 AM	0	0	0	0	0	1	0	0	0	1	0	0	0	0	0	0	0	0	0	0	1
07:30 AM	0	0	0	0	0	0	0	0	0	0	0	0	0	0	0	0	0	0	0	0	0
07:45 AM	0	0	0	0	0	0	0	0	0	0	0	0	0	0	0	0	0	0	0	0	0
Total Volume	0	0	0	0	0	1	0	0	0	1	3	0	0	0	3	0	0	1	0	1	5
% App. Total	0	0	0	0		100	0	0	0		100	0	0	0		0	0	100	0		
PHF	.000	.000	.000	.000	.000	.250	.000	.000	.000	.250	.250	.000	.000	.000	.250	.000	.000	.250	.000	.250	.313

Counts Unlimited Inc.
25286 Jaclyn Avenue
Moreno Valley, CA 92557
951-485-7934

City of Rancho Cucamonga
N/S: Etiwanda Avenue
E/W: Baseline Road
Weather: Sunny

File Name : RNCETBAAM
Site Code : 9150022
Start Date : 6/2/2009

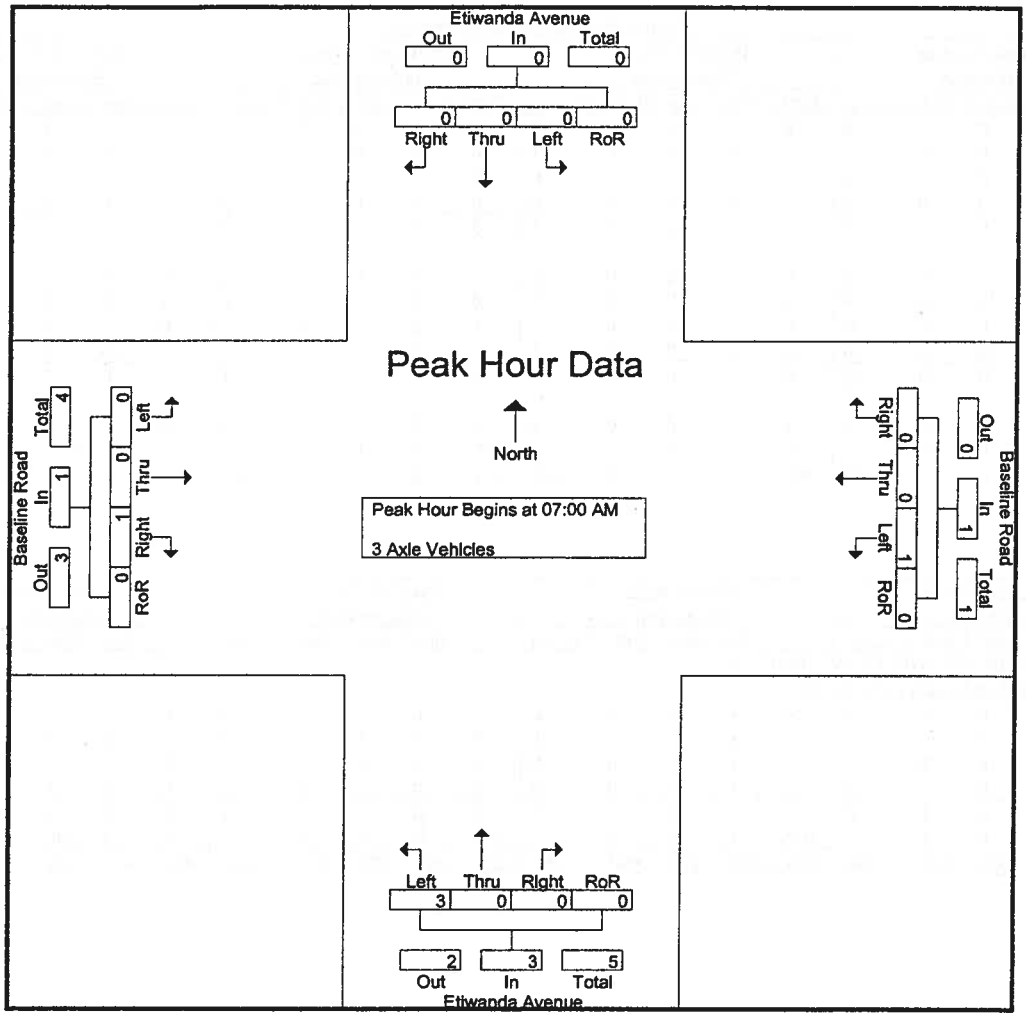

Peak Hour Analysis From 07:00 AM to 07:45 AM - Peak 1 of 1

Peak Hour for Each Approach Begins at:

	07:00 AM					07:00 AM					07:00 AM					07:00 AM				
+0 mins.	0	0	0	0	0	0	0	0	0	0	3	0	0	0	3	0	0	1	0	1
+15 mins.	0	0	0	0	0	1	0	0	0	1	0	0	0	0	0	0	0	0	0	0
+30 mins.	0	0	0	0	0	0	0	0	0	0	0	0	0	0	0	0	0	0	0	0
+45 mins.	0	0	0	0	0	0	0	0	0	0	0	0	0	0	0	0	0	0	0	0
Total Volume	0	0	0	0	0	1	0	0	0	1	3	0	0	0	3	0	0	1	0	1
% App. Total	0	0	0	0		100	0	0	0		100	0	0	0		0	0	100	0	
PHF	.000	.000	.000	.000	.000	.250	.000	.000	.000	.250	.250	.000	.000	.000	.250	.000	.000	.250	.000	.250

Counts Unlimited Inc.
25286 Jaclyn Avenue
Moreno Valley, CA 92557
951-485-7934

City of Rancho Cucamonga
N/S: Etiwanda Avenue
E/W: Baseline Road
Weather: Sunny

File Name : RNCETBAAM
Site Code : 9150022
Start Date : 6/2/2009
Page No : 1

Groups Printed- 4+ Axle Trucks

	Etiwanda Avenue Southbound					Baseline Road Westbound					Etiwanda Avenue Northbound					Baseline Road Eastbound					
Start Time	Left	Thru	Right	RoR	App. Total	Left	Thru	Right	RoR	App. Total	Left	Thru	Right	RoR	App. Total	Left	Thru	Right	RoR	App. Total	Int. Total
07:00 AM	0	0	0	0	0	0	1	0	0	1	0	0	0	0	0	0	0	0	0	0	1
07:15 AM	0	0	0	0	0	0	0	0	0	0	0	0	0	0	0	0	1	0	0	1	1
07:30 AM	0	0	0	0	0	0	0	0	0	0	0	0	0	0	0	0	0	0	0	0	0
07:45 AM	0	0	0	0	0	0	0	0	0	0	0	0	0	0	0	0	0	1	0	1	1
Total	0	0	0	0	0	0	1	0	0	1	0	0	0	0	0	0	1	1	0	2	3
08:00 AM	0	0	0	0	0	0	0	0	0	0	0	0	0	0	0	0	1	0	0	1	1
08:15 AM	0	0	0	0	0	0	1	0	0	1	0	0	0	0	0	0	0	0	0	0	1
08:30 AM	0	0	0	0	0	0	0	0	0	0	0	0	0	0	0	0	0	0	0	0	0
08:45 AM	0	0	0	0	0	0	0	0	0	0	1	0	0	0	1	0	0	0	0	0	1
Total	0	0	0	0	0	0	1	0	0	1	1	0	0	0	1	0	1	0	0	1	3
Grand Total	0	0	0	0	0	0	2	0	0	2	1	0	0	0	1	0	2	1	0	3	6
Apprch %	0	0	0	0		0	100	0	0		100	0	0	0		0	66.7	33.3	0		
Total %	0	0	0	0	0	0	33.3	0	0	33.3	16.7	0	0	0	16.7	0	33.3	16.7	0	50	

	Etiwanda Avenue Southbound					Baseline Road Westbound					Etiwanda Avenue Northbound					Baseline Road Eastbound					
Start Time	Left	Thru	Right	RoR	App. Total		Thru	Right	RoR	App. Total		Thru	Right	RoR	App. Total		Thru	Right	RoR	App. Total	Int. Total
Peak Hour Analysis From 07:00 AM to 07:45 AM - Peak 1 of 1																					
Peak Hour for Entire Intersection Begins at 07:00 AM																					
07:00 AM	0	0	0	0	0	0	1	0	0	1	0	0	0	0	0	0	0	0	0	0	1
07:15 AM	0	0	0	0	0	0	0	0	0	0	0	0	0	0	0	0	1	0	0	1	1
07:30 AM	0	0	0	0	0	0	0	0	0	0	0	0	0	0	0	0	0	0	0	0	0
07:45 AM	0	0	0	0	0	0	0	0	0	0	0	0	0	0	0	0	0	1	0	1	1
Total Volume	0	0	0	0	0	0	1	0	0	1	0	0	0	0	0	0	1	1	0	2	3
% App. Total	0	0	0	0		0	100	0	0		0	0	0	0		0	50	50	0		
PHF	.000	.000	.000	.000	.000	.000	.250	.000	.000	.250	.000	.000	.000	.000	.000	.000	.250	.250	.000	.500	.750

Counts Unlimited Inc.
25286 Jaclyn Avenue
Moreno Valley, CA 92557
951-485-7934

City of Rancho Cucamonga
N/S: Etiwanda Avenue
E/W: Baseline Road
Weather: Sunny

File Name : RNCETBAAM
Site Code : 9150022
Start Date : 6/2/2009
Page No : 2

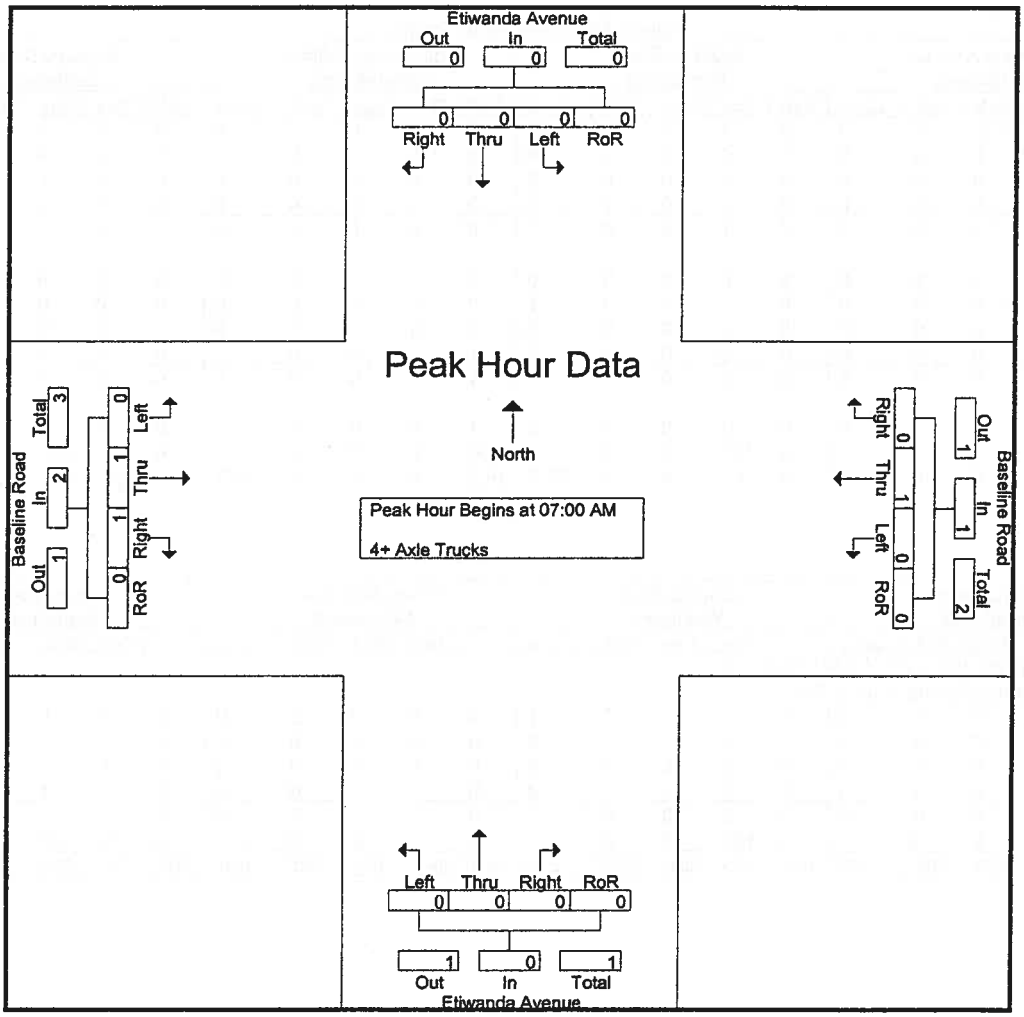

Peak Hour Analysis From 07:00 AM to 07:45 AM - Peak 1 of 1

Peak Hour for Each Approach Begins at:

	07:00 AM					07:00 AM					07:00 AM					07:00 AM				
+0 mins.	0	0	0	0	0	0	1	0	0	1	0	0	0	0	0	0	0	0	0	0
+15 mins.	0	0	0	0	0	0	0	0	0	0	0	0	0	0	0	0	1	0	0	1
+30 mins.	0	0	0	0	0	0	0	0	0	0	0	0	0	0	0	0	0	0	0	0
+45 mins.	0	0	0	0	0	0	0	0	0	0	0	0	0	0	0	0	0	1	0	1
Total Volume	0	0	0	0	0	0	1	0	0	1	0	0	0	0	0	0	1	1	0	2
% App. Total	0	0	0	0		0	100	0	0		0	0	0	0		0	50	50	0	
PHF	.000	.000	.000	.000	.000	.000	.250	.000	.000	.250	.000	.000	.000	.000	.000	.000	.250	.250	.000	.500

Counts Unlimited Inc.
25286 Jaclyn Avenue
Moreno Valley, CA 92557
951-485-7934

City of Rancho Cucamonga
N/S: Etiwanda Avenue
E/W: Baseline Road
Weather: Sunny

File Name : RNCETBAPM
Site Code : 9150022
Start Date : 6/2/2009
Page No : 1

Groups Printed- Passenger Vehicles - Large 2 Axle Vehicles - 3 Axle Vehicles - 4+ Axle Trucks

	Etiwanda Avenue Southbound					Baseline Road Westbound					Etiwanda Avenue Northbound					Baseline Road Eastbound					
Start Time	Left	Thru	Right	RoR	App. Total	Left	Thru	Right	RoR	App. Total	Left	Thru	Right	RoR	App. Total	Left	Thru	Right	RoR	App. Total	Int. Total
04:00 PM	7	22	12	5	46	27	154	17	3	201	30	32	29	27	118	22	119	6	2	149	514
04:15 PM	6	23	3	6	38	32	135	3	4	174	30	41	21	18	110	16	120	16	3	155	477
04:30 PM	8	14	3	5	30	25	132	4	5	166	19	39	29	24	111	16	131	15	4	166	473
04:45 PM	15	25	2	7	49	25	147	8	2	182	29	31	27	20	107	21	117	29	6	173	511
Total	36	84	20	23	163	109	568	32	14	723	108	143	106	89	446	75	487	66	15	643	1975
05:00 PM	5	28	5	5	43	37	112	8	1	158	25	42	11	32	110	15	128	9	7	159	470
05:15 PM	11	24	6	3	44	36	117	11	1	165	33	45	19	31	128	15	153	13	7	188	525
05:30 PM	13	22	9	5	49	31	147	12	9	199	29	53	8	29	119	22	153	13	3	191	558
05:45 PM	12	17	8	9	46	37	152	25	6	220	28	50	35	27	140	36	122	14	7	179	585
Total	41	91	28	22	182	141	528	56	17	742	115	190	73	119	497	88	556	49	24	717	2138
Grand Total	77	175	48	45	345	250	1096	88	31	1465	223	333	179	208	943	163	1043	115	39	1360	4113
Apprch %	22.3	50.7	13.9	13		17.1	74.8	6	2.1		23.6	35.3	19	22.1		12	76.7	8.5	2.9		
Total %	1.9	4.3	1.2	1.1	8.4	6.1	26.6	2.1	0.8	35.6	5.4	8.1	4.4	5.1	22.9	4	25.4	2.8	0.9	33.1	
Passenger Vehicles							1080										1034				
% Passenger Vehicles	100	96.6	100	100	98.3	98.4	98.5	100	96.8	98.6	98.7	99.1	99.4	99	99	99.4	99.1	97.4	100	99	98.8
Large 2 Axle Vehicles																					
% Large 2 Axle Vehicles	0	1.7	0	0	0.9	1.2	1.3	0	3.2	1.2	1.3	0.9	0.6	1	1	0.6	0.7	0.9	0	0.7	0.9
3 Axle Vehicles	0	3	0	0	3	1	2	0	0	3	0	0	0	0	0	0	1	2	0	3	9
% 3 Axle Vehicles	0	1.7	0	0	0.9	0.4	0.2	0	0	0.2	0	0	0	0	0	0	0.1	1.7	0	0.2	0.2
4+ Axle Trucks	0	0	0	0	0	0	0	0	0	0	0	0	0	0	0	0	1	0	0	1	1
% 4+ Axle Trucks																					

	Etiwanda Avenue Southbound					Baseline Road Westbound					Etiwanda Avenue Northbound					Baseline Road Eastbound					
Start Time	Left	Thru	Right	RoR	App. Total	Left	Thru	Right	RoR	App. Total	Left	Thru	Right	RoR	App. Total	Left	Thru	Right	RoR	App. Total	Int. Total
Peak Hour Analysis From 04:00 PM to 05:45 PM - Peak 1 of 1																					
Peak Hour for Entire Intersection Begins at 05:00 PM																					
05:00 PM	5	**28**	5	5	43	**37**	112	8	1	158	25	42	11	**32**	110	15	128	9	7	159	470
05:15 PM	11	24	6	3	44	36	117	11	1	165	**33**	45	19	31	128	15	**153**	13	7	188	525
05:30 PM	**13**	22	9	5	49	31	147	12	**9**	199	29	**53**	8	29	119	22	153	13	3	**191**	558
05:45 PM	12	17	8	**9**	46	37	**152**	**25**	6	**220**	28	50	**35**	27	**140**	**36**	122	**14**	7	179	**585**
Total Volume	41	91	28	22	182	141	528	56	17	742	115	190	73	119	497	88	556	49	24	717	2138
% App. Total	22.5	50	15.4	12.1		19	71.2	7.5	2.3		23.1	38.2	14.7	23.9		12.3	77.5	6.8	3.3		
PHF	.788	.813	.778	.611	.929	.953	.868	.560	.472	.843	.871	.896	.521	.930	.888	.611	.908	.875	.857	.938	.914

Counts Unlimited Inc.
25286 Jaclyn Avenue
Moreno Valley, CA 92557
951-485-7934

City of Rancho Cucamonga
N/S: Etiwanda Avenue
E/W: Baseline Road
Weather: Sunny

File Name : RNCETBAPM
Site Code : 9150022
Start Date : 6/2/2009

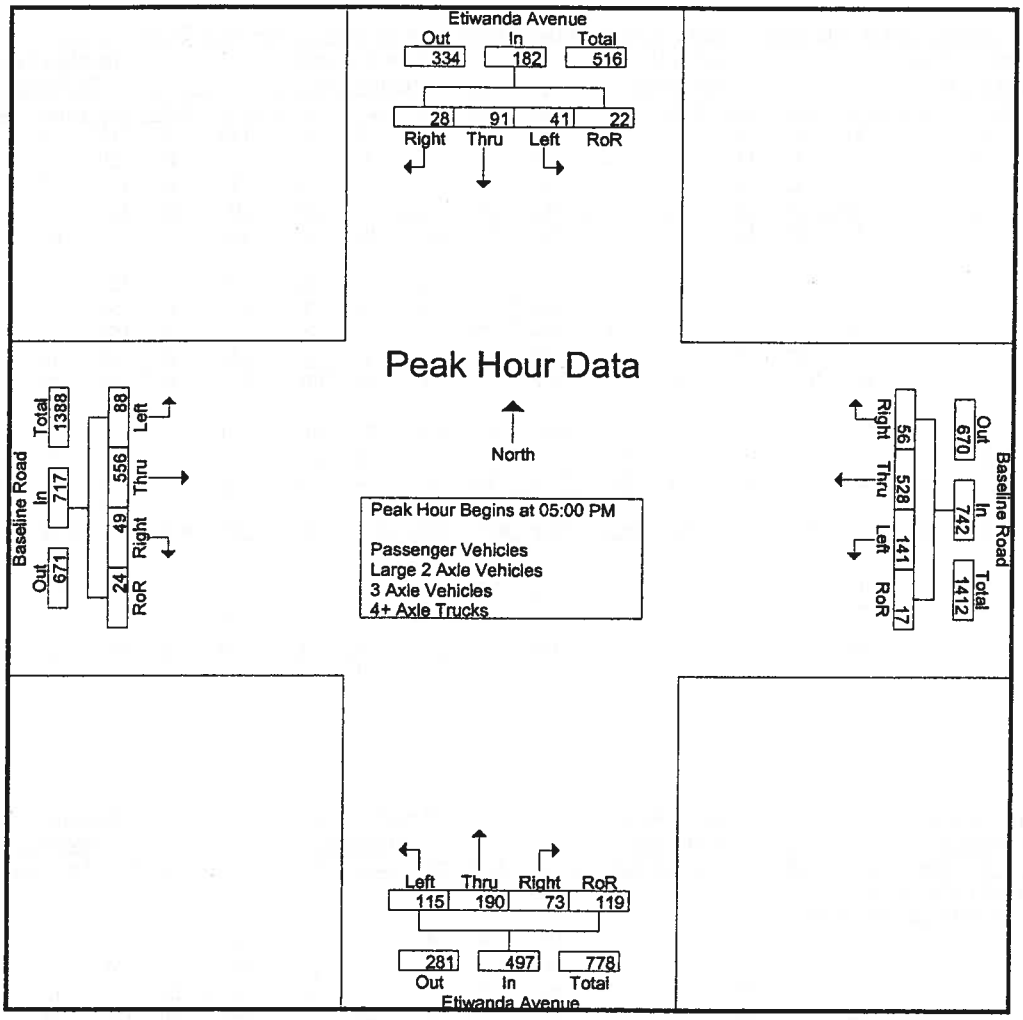

Peak Hour Analysis From 04:00 PM to 05:45 PM - Peak 1 of 1

Peak Hour for Each Approach Begins at:

	04:45 PM					05:00 PM					05:00 PM					05:00 PM				
+0 mins.	**15**	25	2	7	**49**	**37**	112	8	1	158	25	42	11	**32**	110	15	128	9	**7**	159
+15 mins.	5	**28**	5	5	43	36	117	11	1	165	**33**	45	19	31	128	15	**153**	13	7	188
+30 mins.	11	24	6	3	44	31	147	12	**9**	199	29	**53**	8	29	119	22	153	13	3	**191**
+45 mins.	13	22	**9**	5	49	37	**152**	**25**	6	**220**	28	50	**35**	27	**140**	**36**	122	**14**	7	179
Total Volume	44	99	22	20	185	141	528	56	17	742	115	190	73	119	497	88	556	49	24	717
% App. Total	23.8	53.5	11.9	10.8		19	71.2	7.5	2.3		23.1	38.2	14.7	23.9		12.3	77.5	6.8	3.3	
PHF	.733	.884	.611	.714	.944	.953	.868	.560	.472	.843	.871	.896	.521	.930	.888	.611	.908	.875	.857	.938

Counts Unlimited Inc.
25286 Jaclyn Avenue
Moreno Valley, CA 92557
951-485-7934

City of Rancho Cucamonga
N/S: Etiwanda Avenue
E/W: Baseline Road
Weather: Sunny

File Name : RNCETBAPM
Site Code : 9150022
Start Date : 6/2/2009
Page No : 1

Groups Printed- Passenger Vehicles

	Etiwanda Avenue Southbound					Baseline Road Westbound					Etiwanda Avenue Northbound					Baseline Road Eastbound					
Start Time	Left	Thru	Right	RoR	App. Total	Left	Thru	Right	RoR	App. Total	Left	Thru	Right	RoR	App. Total	Left	Thru	Right	RoR	App. Total	Int. Total
04:00 PM	7	19	12	5	43	27	149	17	3	196	30	32	28	27	117	22	119	5	2	148	504
04:15 PM	6	21	3	6	36	32	134	3	4	173	30	41	21	18	110	16	119	15	3	153	472
04:30 PM	8	14	3	5	30	25	132	4	5	166	19	38	29	24	110	16	129	15	4	164	470
04:45 PM	15	24	2	7	48	25	145	8	2	180	27	31	27	20	105	20	114	29	6	169	502
Total	36	78	20	23	157	109	560	32	14	715	106	142	105	89	442	74	481	64	15	634	1948
05:00 PM	5	28	5	5	43	36	110	8	1	155	25	42	11	31	109	15	127	9	7	158	465
05:15 PM	11	24	6	3	44	34	115	11	1	161	33	45	19	31	128	15	152	13	7	187	520
05:30 PM	13	22	9	5	49	30	146	12	9	197	29	51	8	29	117	22	152	12	3	189	552
05:45 PM	12	17	8	9	46	37	149	25	5	216	27	50	35	26	138	36	122	14	7	179	579
Total	41	91	28	22	182	137	520	56	16	729	114	188	73	117	492	88	553	48	24	713	2116
Grand Total	77	169	48	45	339	246	1080	88	30	1444	220	330	178	206	934	162	1034	112	39	1347	4064
Apprch %	22.7	49.9	14.2	13.3		17	74.8	6.1	2.1		23.6	35.3	19.1	22.1		12	76.8	8.3	2.9		
Total %	1.9	4.2	1.2	1.1	8.3	6.1	26.6	2.2	0.7	35.5	5.4	8.1	4.4	5.1	23	4	25.4	2.8	1	33.1	

	Etiwanda Avenue Southbound					Baseline Road Westbound					Etiwanda Avenue Northbound					Baseline Road Eastbound					
Start Time	Left	Thru	Right	RoR	App. Total		Thru	Right	RoR	App. Total		Thru	Right	RoR	App. Total		Thru	Right	RoR	App. Total	Int. Total
Peak Hour Analysis From 05:00 PM to 05:45 PM - Peak 1 of 1																					
Peak Hour for Entire Intersection Begins at 05:00 PM																					
05:00 PM	5	28	5	5	43	36	110	8	1	155	25	42	11	31	109	15	127	9	7	158	465
05:15 PM	11	24	6	3	44	34	115	11	1	161	33	45	19	31	128	15	152	13	7	187	520
05:30 PM	13	22	9	5	49	30	146	12	9	197	29	51	8	29	117	22	152	12	3	189	552
05:45 PM	12	17	8	9	46	37	149	25	5	216	27	50	35	26	138	36	122	14	7	179	579
Total Volume	41	91	28	22	182	137	520	56	16	729	114	188	73	117	492	88	553	48	24	713	2116
% App. Total	22.5	50	15.4	12.1		18.8	71.3	7.7	2.2		23.2	38.2	14.8	23.8		12.3	77.6	6.7	3.4		
PHF	.788	.813	.778	.611	.929	.926	.872	.560	.444	.844	.864	.922	.521	.944	.891	.611	.910	.857	.857	.943	.914

Counts Unlimited Inc.
25286 Jaclyn Avenue
Moreno Valley, CA 92557
951-485-7934

City of Rancho Cucamonga
N/S: Etiwanda Avenue
E/W: Baseline Road
Weather: Sunny

File Name : RNCETBAPM
Site Code : 9150022
Start Date : 6/2/2009
Page No : 2

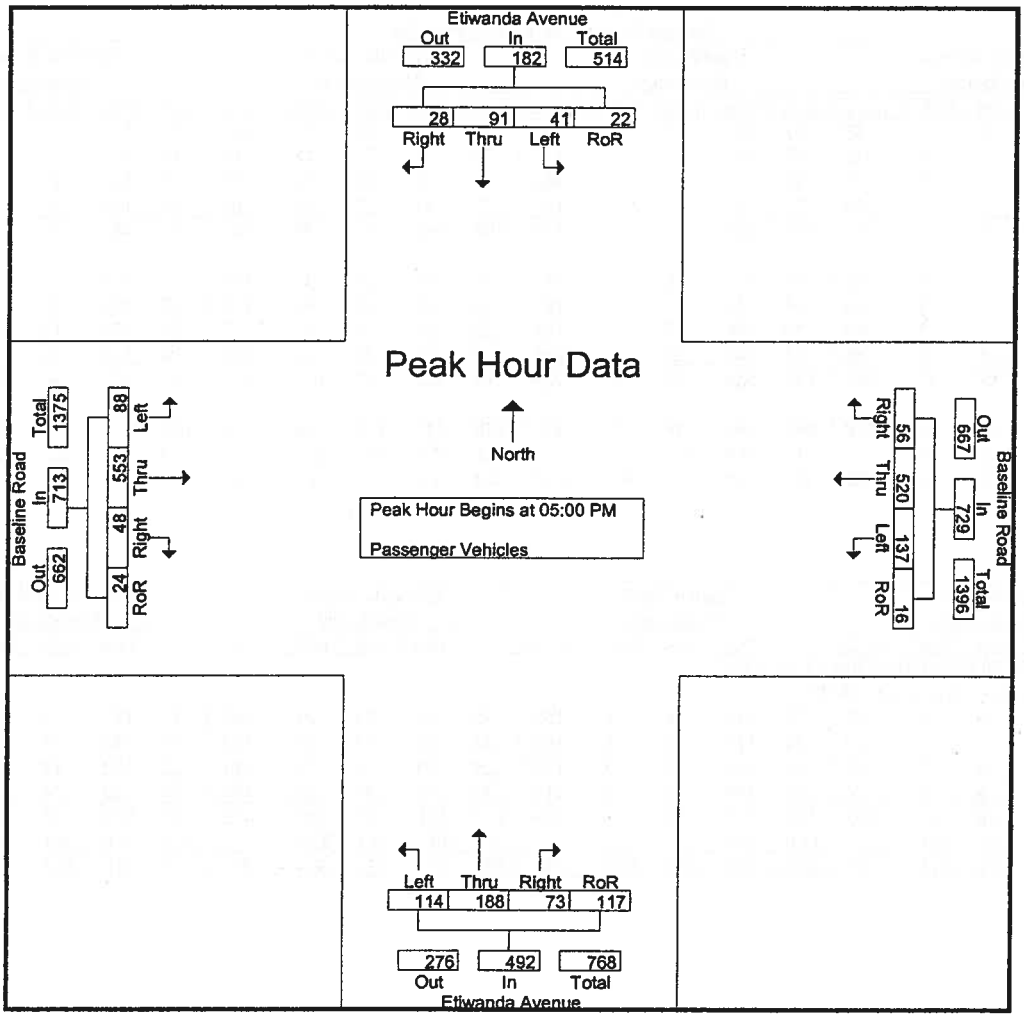

Peak Hour Analysis From 05:00 PM to 05:45 PM - Peak 1 of 1

Peak Hour for Each Approach Begins at:

	05:00 PM					05:00 PM					05:00 PM					05:00 PM				
+0 mins.	5	**28**	5	5	43	36	110	8	1	155	25	42	11	**31**	109	15	127	9	**7**	158
+15 mins.	11	24	6	3	44	34	115	11	1	161	**33**	45	19	31	128	15	**152**	13	7	187
+30 mins.	**13**	22	**9**	5	**49**	30	146	12	**9**	197	29	**51**	8	29	117	22	152	12	3	**189**
+45 mins.	12	17	8	**9**	46	**37**	**149**	**25**	5	**216**	27	50	**35**	26	**138**	**36**	122	**14**	7	179
Total Volume	41	91	28	22	182	137	520	56	16	729	114	188	73	117	492	88	553	48	24	713
% App. Total	22.5	50	15.4	12.1		18.8	71.3	7.7	2.2		23.2	38.2	14.8	23.8		12.3	77.6	6.7	3.4	
PHF	.788	.813	.778	.611	.929	.926	.872	.560	.444	.844	.864	.922	.521	.944	.891	.611	.910	.857	.857	.943

Counts Unlimited Inc.
25286 Jaclyn Avenue
Moreno Valley, CA 92557
951-485-7934

City of Rancho Cucamonga
N/S: Etiwanda Avenue
E/W: Baseline Road
Weather: Sunny

File Name : RNCETBAPM
Site Code : 9150022
Start Date : 6/2/2009
Page No : 1

Groups Printed- Large 2 Axle Vehicles

	Etiwanda Avenue Southbound					Baseline Road Westbound					Etiwanda Avenue Northbound					Baseline Road Eastbound					
Start Time	Left	Thru	Right	RoR	App. Total	Left	Thru	Right	RoR	App. Total	Left	Thru	Right	RoR	App. Total	Left	Thru	Right	RoR	App. Total	Int. Total
04:00 PM	0	1	0	0	1	0	4	0	0	4	0	0	1	0	1	0	0	0	0	0	6
04:15 PM	0	1	0	0	1	0	1	0	0	1	0	0	0	0	0	0	1	0	0	1	3
04:30 PM	0	0	0	0	0	0	0	0	0	0	0	1	0	0	1	0	2	0	0	2	3
04:45 PM	0	1	0	0	1	0	1	0	0	1	2	0	0	0	2	1	1	0	0	2	6
Total	0	3	0	0	3	0	6	0	0	6	2	1	1	0	4	1	4	0	0	5	18
05:00 PM	0	0	0	0	0	1	2	0	0	3	0	0	0	1	1	0	1	0	0	1	5
05:15 PM	0	0	0	0	0	1	2	0	0	3	0	0	0	0	0	0	1	0	0	1	4
05:30 PM	0	0	0	0	0	1	1	0	0	2	0	2	0	0	2	0	1	1	0	2	6
05:45 PM	0	0	0	0	0	0	3	0	1	4	1	0	0	1	2	0	0	0	0	0	6
Total	0	0	0	0	0	3	8	0	1	12	1	2	0	2	5	0	3	1	0	4	21
Grand Total	0	3	0	0	3	3	14	0	1	18	3	3	1	2	9	1	7	1	0	9	39
Apprch %	0	100	0	0		16.7	77.8	0	5.6		33.3	33.3	11.1	22.2		11.1	77.8	11.1	0		
Total %	0	7.7	0	0	7.7	7.7	35.9	0	2.6	46.2	7.7	7.7	2.6	5.1	23.1	2.6	17.9	2.6	0	23.1	

	Etiwanda Avenue Southbound					Baseline Road Westbound					Etiwanda Avenue Northbound					Baseline Road Eastbound					
Start Time	Left	Thru	Right	RoR	App. Total		Thru	Right	RoR	App. Total		Thru	Right	RoR	App. Total		Thru	Right	RoR	App. Total	Int. Total
Peak Hour Analysis From 05:00 PM to 05:45 PM - Peak 1 of 1																					
Peak Hour for Entire Intersection Begins at 05:00 PM																					
05:00 PM	0	0	0	0	0	1	2	0	0	3	0	0	0	1	1	0	1	0	0	1	5
05:15 PM	0	0	0	0	0	1	2	0	0	3	0	0	0	0	0	0	1	0	0	1	4
05:30 PM	0	0	0	0	0	1	1	0	0	2	0	2	0	0	2	0	1	1	0	2	6
05:45 PM	0	0	0	0	0	0	3	0	1	4	1	0	0	1	2	0	0	0	0	0	6
Total Volume	0	0	0	0	0	3	8	0	1	12	1	2	0	2	5	0	3	1	0	4	21
% App. Total	0	0	0	0		25	66.7	0	8.3		20	40	0	40		0	75	25	0		
PHF	.000	.000	.000	.000	.000	.750	.667	.000	.250	.750	.250	.250	.000	.500	.625	.000	.750	.250	.000	.500	.875

Counts Unlimited Inc.
25286 Jaclyn Avenue
Moreno Valley, CA 92557
951-485-7934

City of Rancho Cucamonga
N/S: Etiwanda Avenue
E/W: Baseline Road
Weather: Sunny

File Name : RNCETBAPM
Site Code : 9150022
Start Date : 6/2/2009
Page No : 2

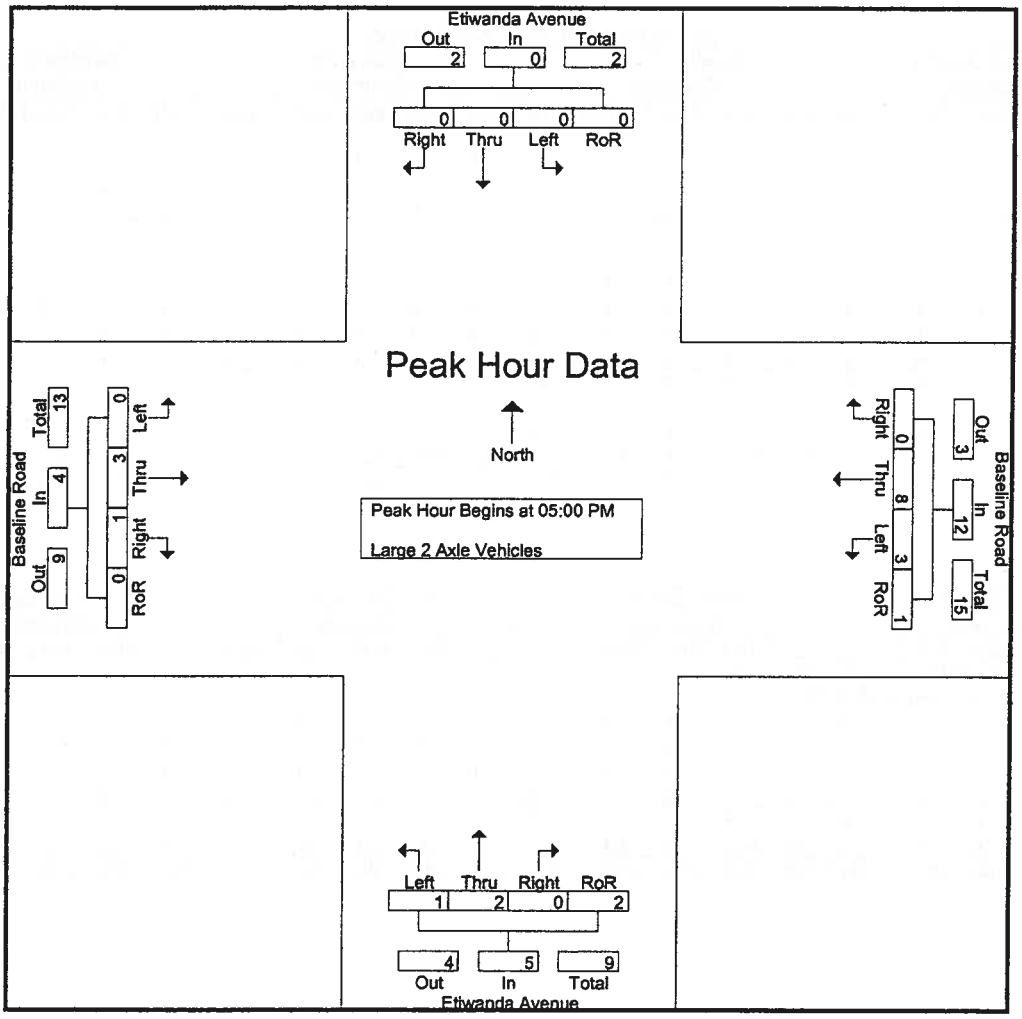

Peak Hour Analysis From 05:00 PM to 05:45 PM - Peak 1 of 1

Peak Hour for Each Approach Begins at:

	05:00 PM					05:00 PM					05:00 PM					05:00 PM				
+0 mins.	0	0	0	0	0	1	2	0	0	3	0	0	0	1	1	0	1	0	0	1
+15 mins.	0	0	0	0	0	1	2	0	0	3	0	0	0	0	0	0	1	0	0	1
+30 mins.	0	0	0	0	0	1	1	0	0	2	0	2	0	0	2	0	1	1	0	2
+45 mins.	0	0	0	0	0	0	3	0	1	4	1	0	0	1	2	0	0	0	0	0
Total Volume	0	0	0	0	0	3	8	0	1	12	1	2	0	2	5	0	3	1	0	4
% App. Total	0	0	0	0		25	66.7	0	8.3		20	40	0	40		0	75	25	0	
PHF	.000	.000	.000	.000	.000	.750	.667	.000	.250	.750	.250	.250	.000	.500	.625	.000	.750	.250	.000	.500

Counts Unlimited Inc.
25286 Jaclyn Avenue
Moreno Valley, CA 92557
951-485-7934

City of Rancho Cucamonga
N/S: Etiwanda Avenue
E/W: Baseline Road
Weather: Sunny

File Name : RNCETBAPM
Site Code : 9150022
Start Date : 6/2/2009
Page No : 1

Groups Printed- 3 Axle Vehicles

	Etiwanda Avenue Southbound					Baseline Road Westbound					Etiwanda Avenue Northbound					Baseline Road Eastbound					
Start Time	Left	Thru	Right	RoR	App. Total	Left	Thru	Right	RoR	App. Total	Left	Thru	Right	RoR	App. Total	Left	Thru	Right	RoR	App. Total	Int. Total
04:00 PM	0	2	0	0	2	0	1	0	0	1	0	0	0	0	0	0	0	1	0	1	4
04:15 PM	0	1	0	0	1	0	0	0	0	0	0	0	0	0	0	0	0	1	0	1	2
04:30 PM	0	0	0	0	0	0	0	0	0	0	0	0	0	0	0	0	0	0	0	0	0
04:45 PM	0	0	0	0	0	0	1	0	0	1	0	0	0	0	0	0	1	0	0	1	2
Total	0	3	0	0	3	0	2	0	0	2	0	0	0	0	0	0	1	2	0	3	8
05:00 PM	0	0	0	0	0	0	0	0	0	0	0	0	0	0	0	0	0	0	0	0	0
05:15 PM	0	0	0	0	0	1	0	0	0	1	0	0	0	0	0	0	0	0	0	0	1
05:30 PM	0	0	0	0	0	0	0	0	0	0	0	0	0	0	0	0	0	0	0	0	0
05:45 PM	0	0	0	0	0	0	0	0	0	0	0	0	0	0	0	0	0	0	0	0	0
Total	0	0	0	0	0	1	0	0	0	1	0	0	0	0	0	0	0	0	0	0	1
Grand Total	0	3	0	0	3	1	2	0	0	3	0	0	0	0	0	0	1	2	0	3	9
Apprch %	0	100	0	0		33.3	66.7	0	0		0	0	0	0		0	33.3	66.7	0		
Total %	0	33.3	0	0	33.3	11.1	22.2	0	0	33.3	0	0	0	0	0	0	11.1	22.2	0	33.3	

	Etiwanda Avenue Southbound					Baseline Road Westbound					Etiwanda Avenue Northbound					Baseline Road Eastbound					
Start Time	Left	Thru	Right	RoR	App. Total		Thru	Right	RoR	App. Total		Thru	Right	RoR	App. Total		Thru	Right	RoR	App. Total	Int. Total
Peak Hour Analysis From 05:00 PM to 05:45 PM - Peak 1 of 1																					
Peak Hour for Entire Intersection Begins at 05:00 PM																					
05:00 PM	0	0	0	0	0	0	0	0	0	0	0	0	0	0	0	0	0	0	0	0	0
05:15 PM	0	0	0	0	0	1	0	0	0	1	0	0	0	0	0	0	0	0	0	0	1
05:30 PM	0	0	0	0	0	0	0	0	0	0	0	0	0	0	0	0	0	0	0	0	0
05:45 PM	0	0	0	0	0	0	0	0	0	0	0	0	0	0	0	0	0	0	0	0	0
Total Volume	0	0	0	0	0	1	0	0	0	1	0	0	0	0	0	0	0	0	0	0	1
% App. Total	0	0	0	0		100	0	0	0		0	0	0	0		0	0	0	0		
PHF	.000	.000	.000	.000	.000	.250	.000	.000	.000	.250	.000	.000	.000	.000	.000	.000	.000	.000	.000	.000	.250

Counts Unlimited Inc.
25286 Jaclyn Avenue
Moreno Valley, CA 92557
951-485-7934

City of Rancho Cucamonga
N/S: Etiwanda Avenue
E/W: Baseline Road
Weather: Sunny

File Name : RNCETBAPM
Site Code : 9150022
Start Date : 6/2/2009
Page No : 2

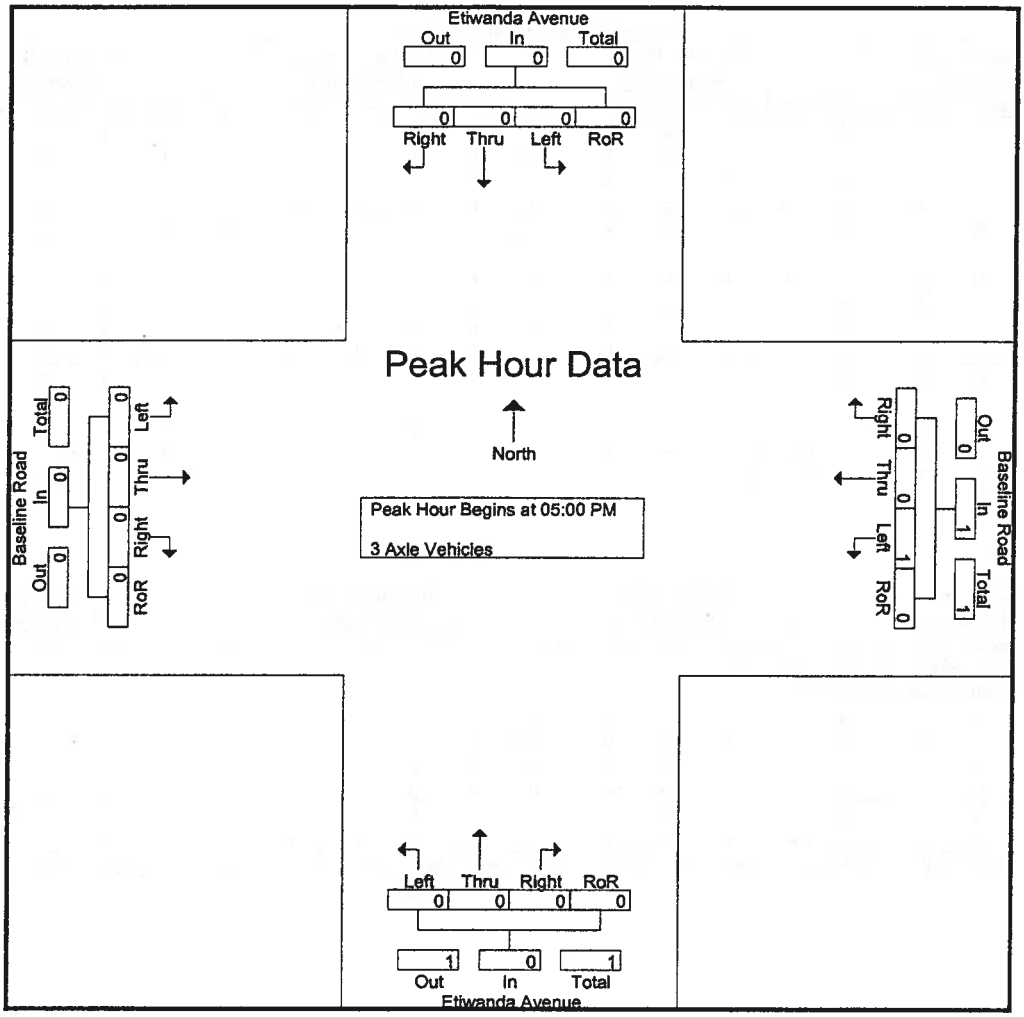

Peak Hour Analysis From 05:00 PM to 05:45 PM - Peak 1 of 1

Peak Hour for Each Approach Begins at:

	05:00 PM					05:00 PM					05:00 PM					05:00 PM				
+0 mins.	0	0	0	0	0	0	0	0	0	0	0	0	0	0	0	0	0	0	0	0
+15 mins.	0	0	0	0	0	1	0	0	0	1	0	0	0	0	0	0	0	0	0	0
+30 mins.	0	0	0	0	0	0	0	0	0	0	0	0	0	0	0	0	0	0	0	0
+45 mins.	0	0	0	0	0	0	0	0	0	0	0	0	0	0	0	0	0	0	0	0
Total Volume	0	0	0	0	0	1	0	0	0	1	0	0	0	0	0	0	0	0	0	0
% App. Total	0	0	0	0		100	0	0	0		0	0	0	0		0	0	0	0	
PHF	.000	.000	.000	.000	.000	.250	.000	.000	.000	.250	.000	.000	.000	.000	.000	.000	.000	.000	.000	.000

Counts Unlimited Inc.
25286 Jaclyn Avenue
Moreno Valley, CA 92557
951-485-7934

City of Rancho Cucamonga
N/S: Etiwanda Avenue
E/W: Baseline Road
Weather: Sunny

File Name : RNCETBAPM
Site Code : 9150022
Start Date : 6/2/2009
Page No : 1

Groups Printed- 4+ Axle Trucks

	Etiwanda Avenue Southbound					Baseline Road Westbound					Etiwanda Avenue Northbound					Baseline Road Eastbound					
Start Time	Left	Thru	Right	RoR	App. Total	Left	Thru	Right	RoR	App. Total	Left	Thru	Right	RoR	App. Total	Left	Thru	Right	RoR	App. Total	Int. Total
04:00 PM	0	0	0	0	0	0	0	0	0	0	0	0	0	0	0	0	0	0	0	0	0
04:15 PM	0	0	0	0	0	0	0	0	0	0	0	0	0	0	0	0	0	0	0	0	0
04:30 PM	0	0	0	0	0	0	0	0	0	0	0	0	0	0	0	0	0	0	0	0	0
04:45 PM	0	0	0	0	0	0	0	0	0	0	0	0	0	0	0	0	1	0	0	1	1
Total	0	0	0	0	0	0	0	0	0	0	0	0	0	0	0	0	1	0	0	1	1
05:00 PM	0	0	0	0	0	0	0	0	0	0	0	0	0	0	0	0	0	0	0	0	0
05:15 PM	0	0	0	0	0	0	0	0	0	0	0	0	0	0	0	0	0	0	0	0	0
05:30 PM	0	0	0	0	0	0	0	0	0	0	0	0	0	0	0	0	0	0	0	0	0
05:45 PM	0	0	0	0	0	0	0	0	0	0	0	0	0	0	0	0	0	0	0	0	0
Total	0	0	0	0	0	0	0	0	0	0	0	0	0	0	0	0	0	0	0	0	0
Grand Total	0	0	0	0	0	0	0	0	0	0	0	0	0	0	0	0	1	0	0	1	1
Apprch %	0	0	0	0		0	0	0	0		0	0	0	0		0	100	0	0		
Total %	0	0	0	0	0	0	0	0	0	0	0	0	0	0	0	0	100	0	0	100	

	Etiwanda Avenue Southbound					Baseline Road Westbound					Etiwanda Avenue Northbound					Baseline Road Eastbound					
Start Time	Left	Thru	Right	RoR	App. Total	Left	Thru	Right	RoR	App. Total	Left	Thru	Right	RoR	App. Total	Left	Thru	Right	RoR	App. Total	Int. Total
Peak Hour Analysis From 05:00 PM to 05:45 PM - Peak 1 of 1																					
Peak Hour for Entire Intersection Begins at 05:00 PM																					
05:00 PM	0	0	0	0	0	0	0	0	0	0	0	0	0	0	0	0	0	0	0	0	0
05:15 PM	0	0	0	0	0	0	0	0	0	0	0	0	0	0	0	0	0	0	0	0	0
05:30 PM	0	0	0	0	0	0	0	0	0	0	0	0	0	0	0	0	0	0	0	0	0
05:45 PM	0	0	0	0	0	0	0	0	0	0	0	0	0	0	0	0	0	0	0	0	0
Total Volume	0	0	0	0	0	0	0	0	0	0	0	0	0	0	0	0	0	0	0	0	0
% App. Total	0	0	0	0		0	0	0	0		0	0	0	0		0	0	0	0		
PHF	.000	.000	.000	.000	.000	.000	.000	.000	.000	.000	.000	.000	.000	.000	.000	.000	.000	.000	.000	.000	.000

RAW PEAK HOUR COUNT SUMMARY

INTERSECTION 20
Etiwanda Avenue (NS) / Foothill Boulevard / SR-66 (EW)

AM PEAK HOUR

SOUTHBOUND

Total	227	292	60
4-Axle	0	1	0
3-Axle	0	2	0
Buses/RV's	0	1	0
Autos	227	288	60

Eastbound

Total	4-Axle	3-Axle	Buses/ RV's	Autos
85	0	0	0	85
453	9	2	12	430
117	19	1	1	96

Westbound

Autos	Buses/ RV's	3-Axle	4-Axle	Total
59	0	0	0	59
738	9	7	4	757
175	1	1	0	177

NORTHBOUND

Autos	80	143	66
Buses/RV's	1	2	3
3-Axle	0	1	0
4-Axle	15	0	0
Total	96	146	69

URBAN CROSSROADS

INTERSECTION 20
Etiwanda Avenue (NS) / Foothill Boulevard / SR-66 (EW)

PM PEAK HOUR

SOUTHBOUND

Total	190	192	52
4-Axle	0	0	0
3-Axle	0	3	0
Buses/RV's	0	2	0
Autos	190	187	52

Eastbound

Total	4-Axle	3-Axle	Buses/ RV's	Autos
235	0	0	1	234
862	8	0	6	848
125	9	0	0	116

Westbound

Autos	Buses/ RV's	3-Axle	4-Axle	Total
77	0	0	0	77
662	6	1	8	677
111	2	4	0	117

NORTHBOUND

Autos	188	330	186
Buses/RV's	1	1	2
3-Axle	0	0	0
4-Axle	4	1	4
Total	183	332	192

URBAN CROSSROADS

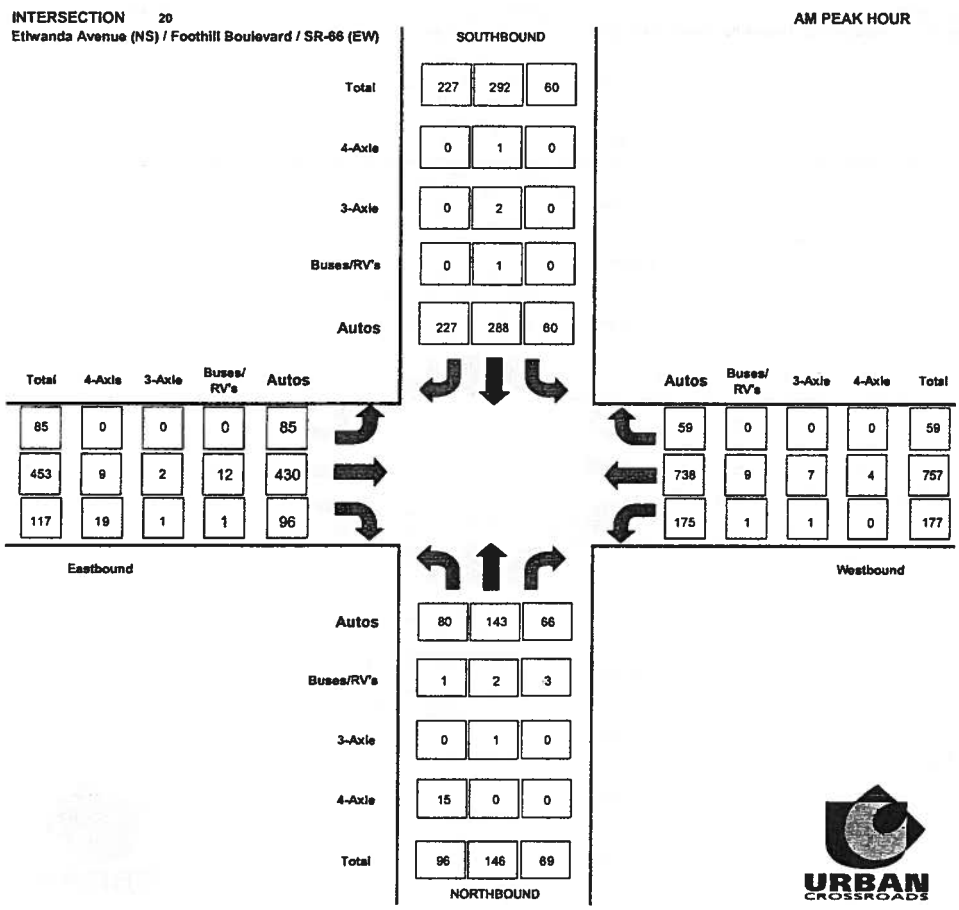

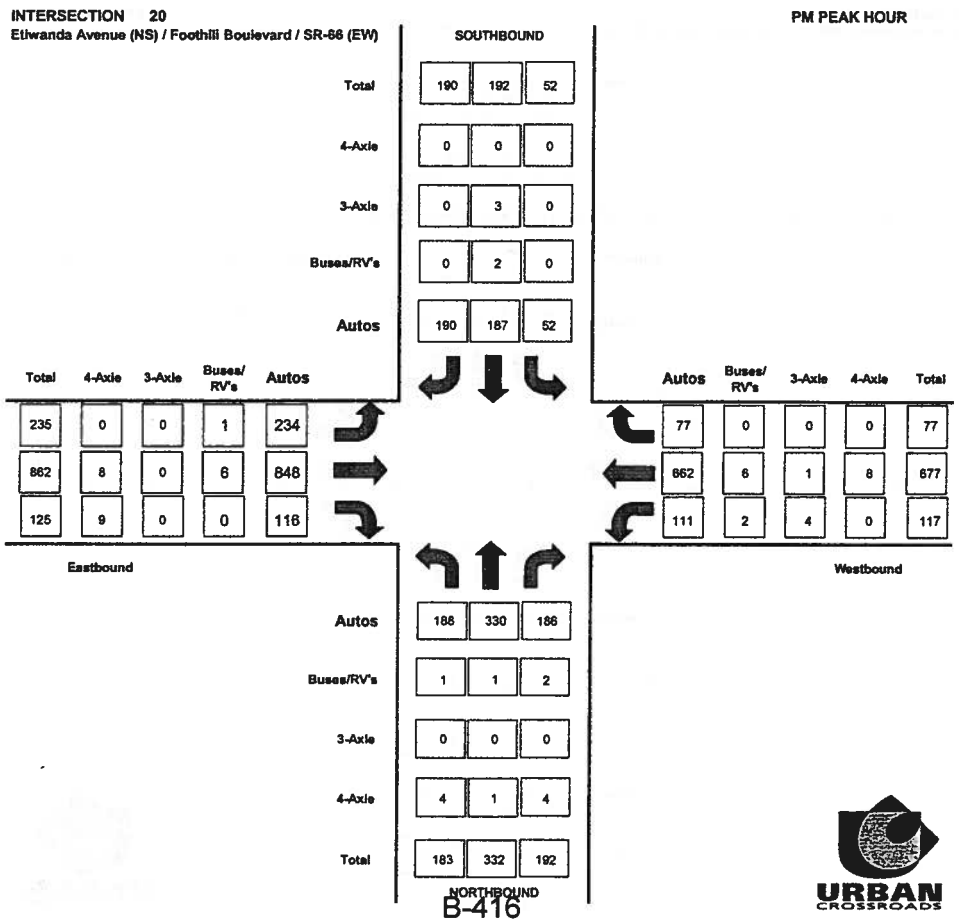

U:\Jobs_08800-07000\08700\08708\Excel\Existing Vols\2 Graphics Summary_Non PCE

Counts Unlimited Inc.
25286 Jaclyn Avenue
Moreno Valley, CA 92557
951-485-7934

20

City of Rancho Cucamonga
N/S: Etiwanda Avenue
E/W: Foothill Boulevard
Weather: Sunny

File Name : RNCETFOAM
Site Code : 9150116
Start Date : 6/3/2009
Page No : 1

Groups Printed- Passenger Vehicles - Large 2 Axle Vehicles - 3 Axle Vehicles - 4+ Axle Trucks

	Etiwanda Avenue Southbound					Foothill Boulevard Westbound					Etiwanda Avenue Northbound					Foothill Boulevard Eastbound					
Start Time	Left	Thru	Right	RoR	App. Total	Left	Thru	Right	RoR	App. Total	Left	Thru	Right	RoR	App. Total	Left	Thru	Right	RoR	App. Total	Int. Total
07:00 AM	13	44	30	16	103	34	173	11	2	220	29	28	3	10	70	14	74	12	16	116	509
07:15 AM	13	71	35	23	142	46	203	7	3	259	18	31	8	8	65	11	79	10	19	119	585
07:30 AM	13	70	37	22	142	44	199	9	9	261	25	45	8	8	86	15	113	10	15	153	642
07:45 AM	19	85	55	20	179	62	229	6	4	301	28	28	5	12	73	17	121	22	10	170	723
Total	58	270	157	81	566	186	804	33	18	1041	100	132	24	38	294	57	387	54	60	558	2459
08:00 AM	12	67	38	14	131	41	158	9	5	213	23	25	12	9	69	23	112	23	11	169	582
08:15 AM	16	70	35	6	127	30	171	12	5	218	20	48	10	5	83	30	107	11	15	163	591
08:30 AM	17	29	41	7	94	30	170	8	5	213	19	28	6	15	68	31	122	10	7	170	545
08:45 AM	6	42	24	5	77	25	149	5	4	183	21	18	5	9	53	26	124	12	7	169	482
Total	51	208	138	32	429	126	648	34	19	827	83	119	33	38	273	110	465	56	40	671	2200
Grand Total	109	478	295	113	995	312	1452	67	37	1868	183	251	57	76	567	167	852	110	100	1229	4659
Apprch %	11	48	29.6	11.4		16.7	77.7	3.6	2		32.3	44.3	10.1	13.4		13.6	69.3	9	8.1		
Total %	2.3	10.3	6.3	2.4	21.4	6.7	31.2	1.4	0.8	40.1	3.9	5.4	1.2	1.6	12.2	3.6	18.3	2.4	2.1	26.4	
Passenger Vehicles							1416														
% Passenger Vehicles	99.1	98.7	99.3	100	99.1	98.4	97.5	100	100	97.8	83.6	96.4	89.5	96.1	91.5	99.4	93.8	73.6	88	92.3	95.9
Large 2 Axle Vehicles																					
% Large 2 Axle Vehicles	0.9	0.2	0.7	0	0.4	1	1.2	0	0	1.1	1.1	1.6	5.3	0	1.6	0.6	3.2	1.8	0	2.4	1.4
3 Axle Vehicles	0	4	0	0	4	2	8	0	0	10	3	4	0	3	10	0	5	2	1	8	32
% 3 Axle Vehicles	0	0.8	0	0	0.4	0.6	0.6	0	0	0.5	1.6	1.6	0	3.9	1.8	0	0.6	1.8	1	0.7	0.7
4+ Axle Trucks	0	1	0	0	1	0	11	0	0	11	25	1	3	0	29	0	21	25	11	57	98
% 4+ Axle Trucks																					

	Etiwanda Avenue Southbound					Foothill Boulevard Westbound					Etiwanda Avenue Northbound					Foothill Boulevard Eastbound					
Start Time	Left	Thru	Right	RoR	App. Total	Left	Thru	Right	RoR	App. Total	Left	Thru	Right	RoR	App. Total	Left	Thru	Right	RoR	App. Total	Int. Total
Peak Hour Analysis From 07:00 AM to 08:45 AM - Peak 1 of 1																					
Peak Hour for Entire Intersection Begins at 07:30 AM																					
07:30 AM	13	70	37	**22**	142	44	199	9	**9**	261	25	45	8	8	**86**	15	113	10	**15**	153	642
07:45 AM	**19**	**85**	**55**	20	**179**	**62**	**229**	6	4	**301**	**28**	28	5	**12**	73	17	**121**	22	10	**170**	**723**
08:00 AM	12	67	38	14	131	41	158	9	5	213	23	25	**12**	9	69	23	112	**23**	11	169	582
08:15 AM	16	70	35	6	127	30	171	**12**	5	218	20	**48**	10	5	83	**30**	107	11	15	163	591
Total Volume	60	292	165	62	579	177	757	36	23	993	96	146	35	34	311	85	453	66	51	655	2538
% App. Total	10.4	50.4	28.5	10.7		17.8	76.2	3.6	2.3		30.9	46.9	11.3	10.9		13	69.2	10.1	7.8		
PHF	.789	.859	.750	.705	.809	.714	.826	.750	.639	.825	.857	.760	.729	.708	.904	.708	.936	.717	.850	.963	.878

Counts Unlimited Inc.
25286 Jaclyn Avenue
Moreno Valley, CA 92557
951-485-7934

City of Rancho Cucamonga
N/S: Etiwanda Avenue
E/W: Foothill Boulevard
Weather: Sunny

File Name : RNCETFOAM
Site Code : 9150116
Start Date : 6/3/2009
Page No : 2

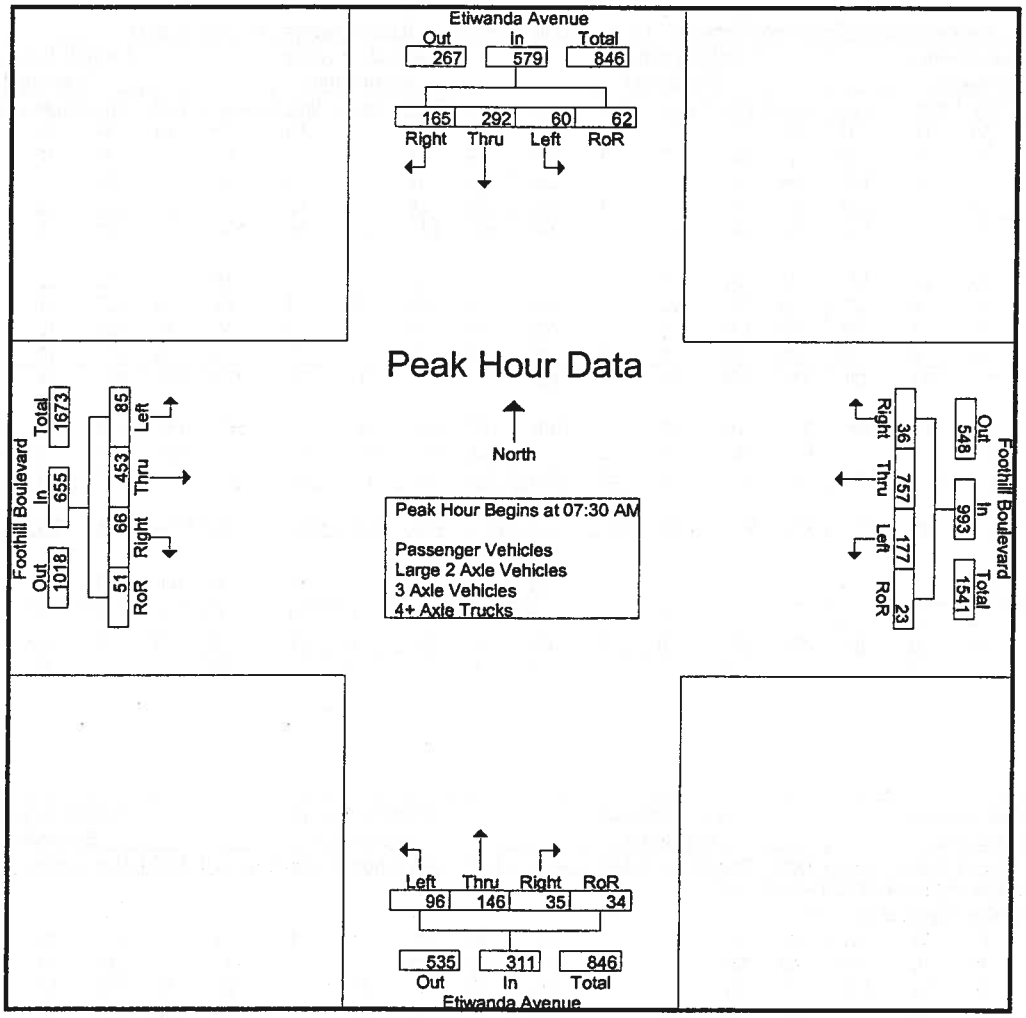

Peak Hour Analysis From 07:00 AM to 08:45 AM - Peak 1 of 1

Peak Hour for Each Approach Begins at:

	07:15 AM					07:00 AM					07:30 AM					07:45 AM				
+0 mins.	13	71	35	**23**	142	34	173	**11**	2	220	25	45	8	8	**86**	17	121	22	10	**170**
+15 mins.	13	70	37	22	142	46	203	7	3	259	**28**	28	5	**12**	73	23	112	**23**	11	169
+30 mins.	**19**	**85**	**55**	20	**179**	44	199	**9**	**9**	261	23	25	**12**	9	69	30	107	11	**15**	163
+45 mins.	12	67	38	14	131	**62**	**229**	6	4	**301**	20	**48**	10	5	83	**31**	**122**	10	7	170
Total Volume	57	293	165	79	594	186	804	33	18	1041	96	146	35	34	311	101	462	66	43	672
% App. Total	9.6	49.3	27.8	13.3		17.9	77.2	3.2	1.7		30.9	46.9	11.3	10.9		15	68.8	9.8	6.4	
PHF	.750	.862	.750	.859	.830	.750	.878	.750	.500	.865	.857	.760	.729	.708	.904	.815	.947	.717	.717	.988

Counts Unlimited Inc.
25286 Jaclyn Avenue
Moreno Valley, CA 92557
951-485-7934

City of Rancho Cucamonga
N/S: Etiwanda Avenue
E/W: Foothill Boulevard
Weather: Sunny

File Name : RNCETFOAM
Site Code : 9150116
Start Date : 6/3/2009
Page No : 1

Groups Printed- Passenger Vehicles

	Etiwanda Avenue Southbound					Foothill Boulevard Westbound					Etiwanda Avenue Northbound					Foothill Boulevard Eastbound					
Start Time	Left	Thru	Right	RoR	App. Total	Left	Thru	Right	RoR	App. Total	Left	Thru	Right	RoR	App. Total	Left	Thru	Right	RoR	App. Total	Int. Total
07:00 AM	12	44	29	16	101	33	165	11	2	211	23	24	3	9	59	13	71	9	12	105	476
07:15 AM	13	71	35	23	142	45	201	7	3	256	16	31	7	6	60	11	71	8	19	109	567
07:30 AM	13	69	37	22	141	43	194	9	9	255	24	44	8	8	84	15	106	6	15	142	622
07:45 AM	19	83	55	20	177	62	222	6	4	294	25	28	5	12	70	17	117	18	10	162	703
Total	57	267	156	81	561	183	782	33	18	1016	88	127	23	35	273	56	365	41	56	518	2368
08:00 AM	12	67	38	14	131	40	157	9	5	211	17	23	11	9	60	23	105	18	9	155	557
08:15 AM	16	69	35	6	126	30	165	12	5	212	14	48	8	5	75	30	102	6	14	152	565
08:30 AM	17	29	40	7	93	30	165	8	5	208	16	27	4	15	62	31	114	6	3	154	517
08:45 AM	6	40	24	5	75	24	147	5	4	180	18	17	5	9	49	26	113	10	6	155	459
Total	51	205	137	32	425	124	634	34	19	811	65	115	28	38	246	110	434	40	32	616	2098
Grand Total	108	472	293	113	986	307	1416	67	37	1827	153	242	51	73	519	166	799	81	88	1134	4466
Apprch %	11	47.9	29.7	11.5		16.8	77.5	3.7	2		29.5	46.6	9.8	14.1		14.6	70.5	7.1	7.8		
Total %	2.4	10.6	6.6	2.5	22.1	6.9	31.7	1.5	0.8	40.9	3.4	5.4	1.1	1.6	11.6	3.7	17.9	1.8	2	25.4	

	Etiwanda Avenue Southbound					Foothill Boulevard Westbound					Etiwanda Avenue Northbound					Foothill Boulevard Eastbound					
Start Time	Left	Thru	Right	RoR	App. Total		Thru	Right	RoR	App. Total		Thru	Right	RoR	App. Total		Thru	Right	RoR	App. Total	Int. Total
Peak Hour Analysis From 07:30 AM to 08:15 AM - Peak 1 of 1																					
Peak Hour for Entire Intersection Begins at 07:30 AM																					
07:30 AM	13	69	37	**22**	141	43	194	9	**9**	255	24	44	8	8	**84**	15	106	6	**15**	142	622
07:45 AM	**19**	**83**	**55**	20	177	**62**	**222**	6	4	**294**	**25**	28	5	**12**	70	17	**117**	**18**	10	**162**	**703**
08:00 AM	12	67	38	14	131	40	157	9	5	211	17	23	**11**	9	60	23	105	18	9	155	557
08:15 AM	16	69	35	6	126	30	165	**12**	5	212	14	**48**	8	5	75	**30**	102	6	14	152	565
Total Volume	60	288	165	62	575	175	738	36	23	972	80	143	32	34	289	85	430	48	48	611	2447
% App. Total	10.4	50.1	28.7	10.8		18	75.9	3.7	2.4		27.7	49.5	11.1	11.8		13.9	70.4	7.9	7.9		
PHF	.789	.867	.750	.705	.812	.706	.831	.750	.639	.827	.800	.745	.727	.708	.860	.708	.919	.667	.800	.943	.870

Counts Unlimited Inc.
25286 Jaclyn Avenue
Moreno Valley, CA 92557
951-485-7934

City of Rancho Cucamonga
N/S: Etiwanda Avenue
E/W: Foothill Boulevard
Weather: Sunny

File Name : RNCETFOAM
Site Code : 9150116
Start Date : 6/3/2009
Page No : 2

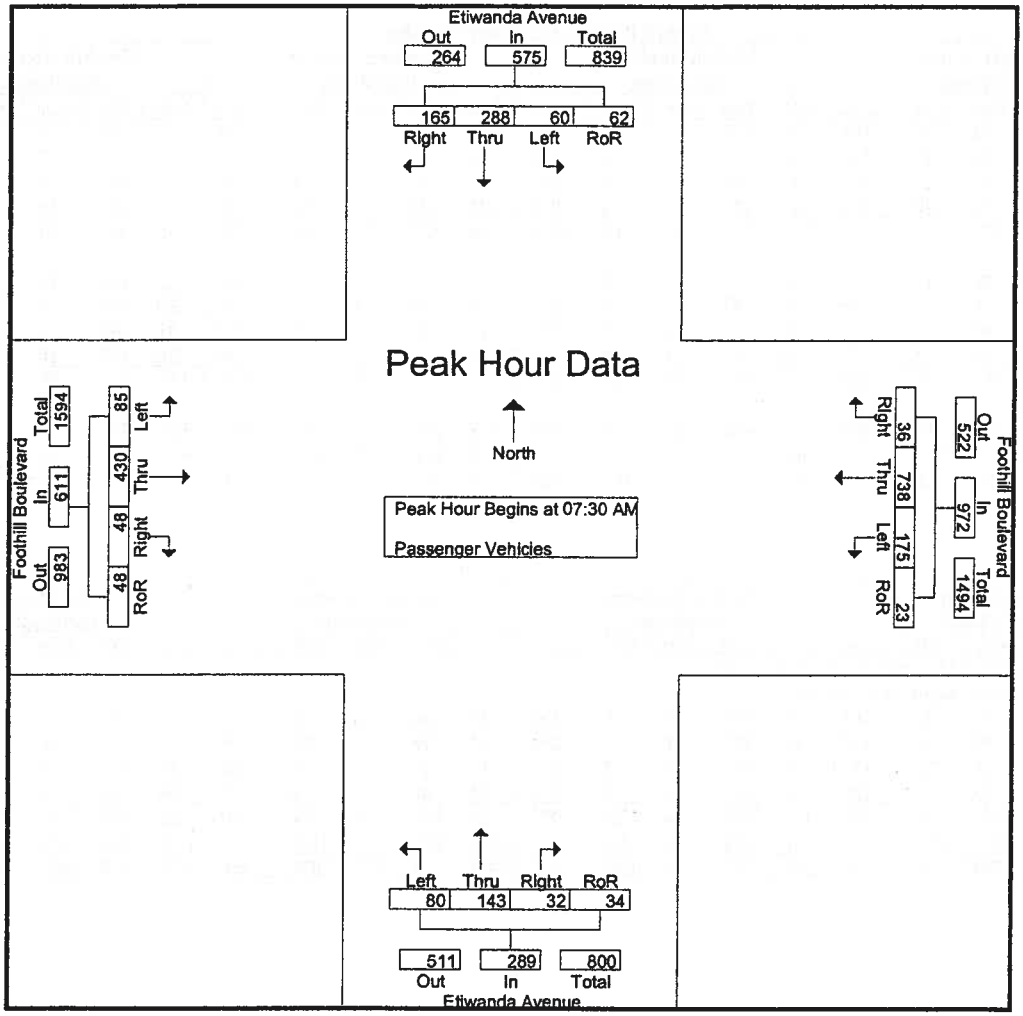

Peak Hour Analysis From 07:30 AM to 08:15 AM - Peak 1 of 1

Peak Hour for Each Approach Begins at:

	07:30 AM					07:30 AM					07:30 AM					07:30 AM				
+0 mins.	13	69	37	**22**	141	43	194	9	**9**	255	24	44	8	8	**84**	15	106	6	**15**	142
+15 mins.	**19**	**83**	**55**	20	**177**	**62**	**222**	6	4	**294**	**25**	28	5	**12**	70	17	**117**	**18**	10	**162**
+30 mins.	12	67	38	14	131	40	157	9	5	211	17	23	**11**	9	60	23	105	18	9	155
+45 mins.	16	69	35	6	126	30	165	**12**	5	212	14	**48**	8	5	75	**30**	102	6	14	152
Total Volume	60	288	165	62	575	175	738	36	23	972	80	143	32	34	289	85	430	48	48	611
% App. Total	10.4	50.1	28.7	10.8		18	75.9	3.7	2.4		27.7	49.5	11.1	11.8		13.9	70.4	7.9	7.9	
PHF	.789	.867	.750	.705	.812	.706	.831	.750	.639	.827	.800	.745	.727	.708	.860	.708	.919	.667	.800	.943

Counts Unlimited Inc.
25286 Jaclyn Avenue
Moreno Valley, CA 92557
951-485-7934

City of Rancho Cucamonga
N/S: Etiwanda Avenue
E/W: Foothill Boulevard
Weather: Sunny

File Name : RNCETFOAM
Site Code : 9150116
Start Date : 6/3/2009
Page No : 1

Groups Printed- Large 2 Axle Vehicles

	Etiwanda Avenue Southbound					Foothill Boulevard Westbound					Etiwanda Avenue Northbound					Foothill Boulevard Eastbound					
Start Time	Left	Thru	Right	RoR	App. Total	Left	Thru	Right	RoR	App. Total	Left	Thru	Right	RoR	App. Total	Left	Thru	Right	RoR	App. Total	Int. Total
07:00 AM	1	0	1	0	2	0	4	0	0	4	1	2	0	0	3	1	1	1	0	3	12
07:15 AM	0	0	0	0	0	1	1	0	0	2	0	0	0	0	0	0	7	0	0	7	9
07:30 AM	0	0	0	0	0	0	2	0	0	2	1	1	0	0	2	0	2	0	0	2	6
07:45 AM	0	0	0	0	0	0	3	0	0	3	0	0	0	0	0	0	1	0	0	1	4
Total	1	0	1	0	2	1	10	0	0	11	2	3	0	0	5	1	11	1	0	13	31
08:00 AM	0	0	0	0	0	1	1	0	0	2	0	1	1	0	2	0	5	0	0	5	9
08:15 AM	0	1	0	0	1	0	2	0	0	2	0	0	2	0	2	0	4	1	0	5	10
08:30 AM	0	0	1	0	1	0	3	0	0	3	0	0	0	0	0	0	3	0	0	3	7
08:45 AM	0	0	0	0	0	1	1	0	0	2	0	0	0	0	0	0	4	0	0	4	6
Total	0	1	1	0	2	2	7	0	0	9	0	1	3	0	4	0	16	1	0	17	32
Grand Total	1	1	2	0	4	3	17	0	0	20	2	4	3	0	9	1	27	2	0	30	63
Apprch %	25	25	50	0		15	85	0	0		22.2	44.4	33.3	0		3.3	90	6.7	0		
Total %	1.6	1.6	3.2	0	6.3	4.8	27	0	0	31.7	3.2	6.3	4.8	0	14.3	1.6	42.9	3.2	0	47.6	

	Etiwanda Avenue Southbound					Foothill Boulevard Westbound					Etiwanda Avenue Northbound					Foothill Boulevard Eastbound					
Start Time	Left	Thru	Right	RoR	App. Total		Thru	Right	RoR	App. Total		Thru	Right	RoR	App. Total		Thru	Right	RoR	App. Total	Int. Total
Peak Hour Analysis From 07:30 AM to 08:15 AM - Peak 1 of 1																					
Peak Hour for Entire Intersection Begins at 07:30 AM																					
07:30 AM	0	0	0	0	0	0	2	0	0	2	1	1	0	0	2	0	2	0	0	2	6
07:45 AM	0	0	0	0	0	0	3	0	0	3	0	0	0	0	0	0	1	0	0	1	4
08:00 AM	0	0	0	0	0	1	1	0	0	2	0	1	1	0	2	0	5	0	0	5	9
08:15 AM	0	1	0	0	1	0	2	0	0	2	0	0	2	0	2	0	4	1	0	5	10
Total Volume	0	1	0	0	1	1	8	0	0	9	1	2	3	0	6	0	12	1	0	13	29
% App. Total	0	100	0	0		11.1	88.9	0	0		16.7	33.3	50	0		0	92.3	7.7	0		
PHF	.000	.250	.000	.000	.250	.250	.667	.000	.000	.750	.250	.500	.375	.000	.750	.000	.600	.250	.000	.650	.725

Counts Unlimited Inc.
25286 Jaclyn Avenue
Moreno Valley, CA 92557
951-485-7934

City of Rancho Cucamonga
N/S: Etiwanda Avenue
E/W: Foothill Boulevard
Weather: Sunny

File Name : RNCETFOAM
Site Code : 9150116
Start Date : 6/3/2009
Page No : 2

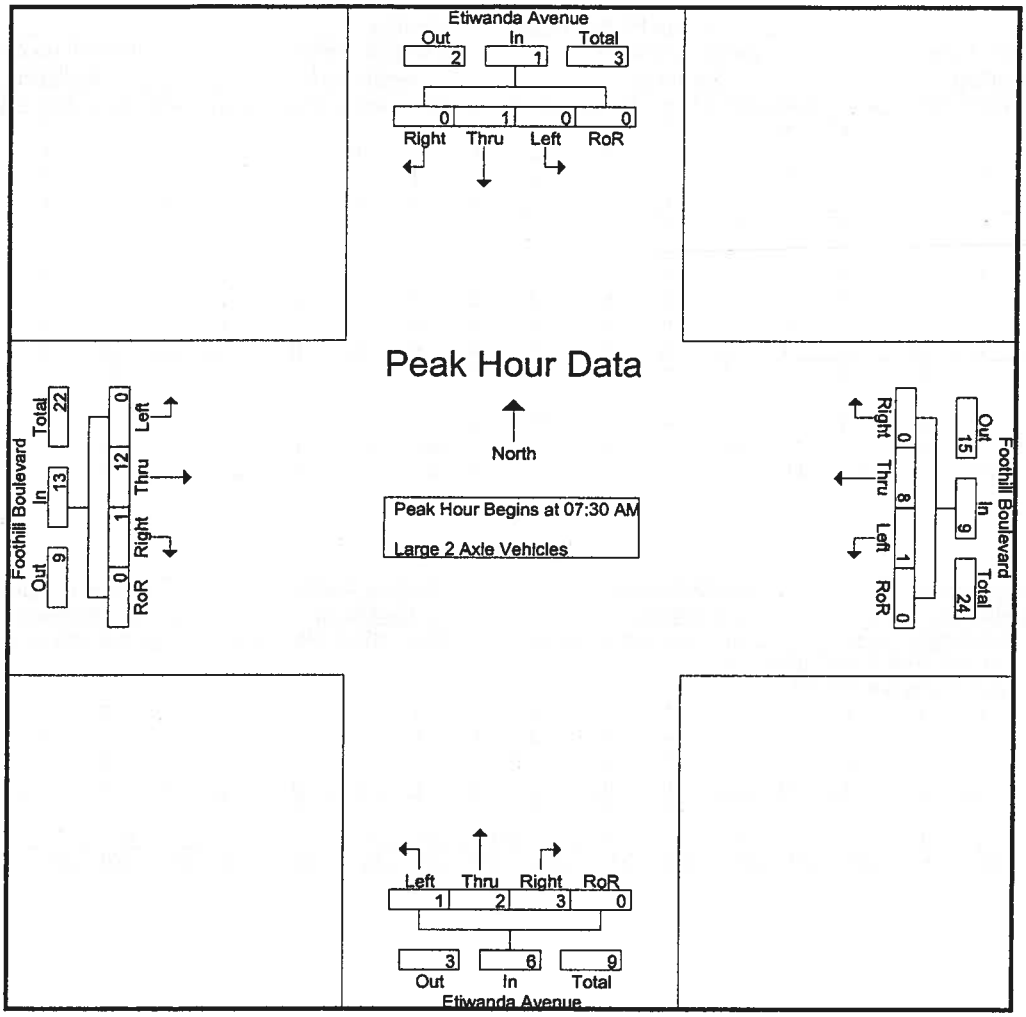

Peak Hour Analysis From 07:30 AM to 08:15 AM - Peak 1 of 1

Peak Hour for Each Approach Begins at:

	07:30 AM					07:30 AM					07:30 AM					07:30 AM				
+0 mins.	0	0	0	0	0	0	2	0	0	2	1	1	0	0	2	0	2	0	0	2
+15 mins.	0	0	0	0	0	0	3	0	0	3	0	0	0	0	0	0	1	0	0	1
+30 mins.	0	0	0	0	0	1	1	0	0	2	0	1	1	0	2	0	5	0	0	5
+45 mins.	0	1	0	0	1	0	2	0	0	2	0	0	2	0	2	0	4	1	0	5
Total Volume	0	1	0	0	1	1	8	0	0	9	1	2	3	0	6	0	12	1	0	13
% App. Total	0	100	0	0		11.1	88.9	0	0		16.7	33.3	50	0		0	92.3	7.7	0	
PHF	.000	.250	.000	.000	.250	.250	.667	.000	.000	.750	.250	.500	.375	.000	.750	.000	.600	.250	.000	.650

Counts Unlimited Inc.
25286 Jaclyn Avenue
Moreno Valley, CA 92557
951-485-7934

City of Rancho Cucamonga
N/S: Etiwanda Avenue
E/W: Foothill Boulevard
Weather: Sunny

File Name : RNCETFOAM
Site Code : 9150116
Start Date : 6/3/2009
Page No : 1

Groups Printed- 3 Axle Vehicles

	Etiwanda Avenue Southbound					Foothill Boulevard Westbound					Etiwanda Avenue Northbound					Foothill Boulevard Eastbound					
Start Time	Left	Thru	Right	RoR	App. Total	Left	Thru	Right	RoR	App. Total	Left	Thru	Right	RoR	App. Total	Left	Thru	Right	RoR	App. Total	Int. Total
07:00 AM	0	0	0	0	0	1	0	0	0	1	2	2	0	1	5	0	0	0	1	1	7
07:15 AM	0	0	0	0	0	0	1	0	0	1	0	0	0	2	2	0	0	0	0	0	3
07:30 AM	0	0	0	0	0	1	2	0	0	3	0	0	0	0	0	0	2	0	0	2	5
07:45 AM	0	2	0	0	2	0	2	0	0	2	0	0	0	0	0	0	0	0	0	0	4
Total	0	2	0	0	2	2	5	0	0	7	2	2	0	3	7	0	2	0	1	3	19
08:00 AM	0	0	0	0	0	0	0	0	0	0	0	1	0	0	1	0	0	0	0	0	1
08:15 AM	0	0	0	0	0	0	3	0	0	3	0	0	0	0	0	0	0	1	0	1	4
08:30 AM	0	0	0	0	0	0	0	0	0	0	0	1	0	0	1	0	0	0	0	0	1
08:45 AM	0	2	0	0	2	0	0	0	0	0	1	0	0	0	1	0	3	1	0	4	7
Total	0	2	0	0	2	0	3	0	0	3	1	2	0	0	3	0	3	2	0	5	13
Grand Total	0	4	0	0	4	2	8	0	0	10	3	4	0	3	10	0	5	2	1	8	32
Apprch %	0	100	0	0		20	80	0	0		30	40	0	30		0	62.5	25	12.5		
Total %	0	12.5	0	0	12.5	6.2	25	0	0	31.2	9.4	12.5	0	9.4	31.2	0	15.6	6.2	3.1	25	

	Etiwanda Avenue Southbound					Foothill Boulevard Westbound					Etiwanda Avenue Northbound					Foothill Boulevard Eastbound					
Start Time	Left	Thru	Right	RoR	App. Total		Thru	Right	RoR	App. Total		Thru	Right	RoR	App. Total		Thru	Right	RoR	App. Total	Int. Total
Peak Hour Analysis From 07:30 AM to 08:15 AM - Peak 1 of 1																					
Peak Hour for Entire Intersection Begins at 07:30 AM																					
07:30 AM	0	0	0	0	0	1	2	0	0	3	0	0	0	0	0	0	2	0	0	2	5
07:45 AM	0	2	0	0	2	0	2	0	0	2	0	0	0	0	0	0	0	0	0	0	4
08:00 AM	0	0	0	0	0	0	0	0	0	0	0	1	0	0	1	0	0	0	0	0	1
08:15 AM	0	0	0	0	0	0	3	0	0	3	0	0	0	0	0	0	0	1	0	1	4
Total Volume	0	2	0	0	2	1	7	0	0	8	0	1	0	0	1	0	2	1	0	3	14
% App. Total	0	100	0	0		12.5	87.5	0	0		0	100	0	0		0	66.7	33.3	0		
PHF	.000	.250	.000	.000	.250	.250	.583	.000	.000	.667	.000	.250	.000	.000	.250	.000	.250	.250	.000	.375	.700

Counts Unlimited Inc.
25286 Jaclyn Avenue
Moreno Valley, CA 92557
951-485-7934

City of Rancho Cucamonga
N/S: Etiwanda Avenue
E/W: Foothill Boulevard
Weather: Sunny

File Name : RNCETFOAM
Site Code : 9150116
Start Date : 6/3/2009
Page No : 2

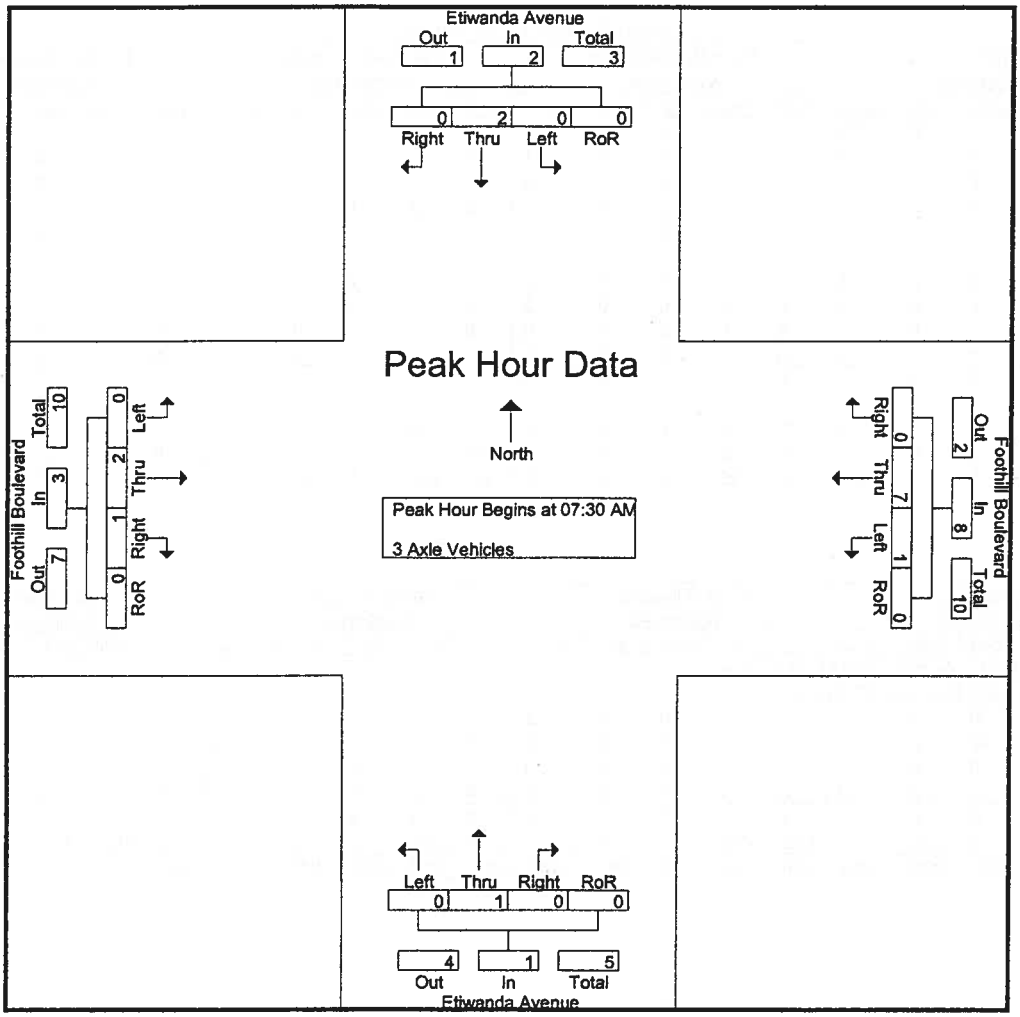

Peak Hour Analysis From 07:30 AM to 08:15 AM - Peak 1 of 1

Peak Hour for Each Approach Begins at:

	07:30 AM					07:30 AM					07:30 AM					07:30 AM				
+0 mins.	0	0	0	0	0	1	2	0	0	3	0	0	0	0	0	0	2	0	0	2
+15 mins.	0	2	0	0	2	0	2	0	0	2	0	0	0	0	0	0	0	0	0	0
+30 mins.	0	0	0	0	0	0	0	0	0	0	0	1	0	0	1	0	0	0	0	0
+45 mins.	0	0	0	0	0	0	3	0	0	3	0	0	0	0	0	0	0	1	0	1
Total Volume	0	2	0	0	2	1	7	0	0	8	0	1	0	0	1	0	2	1	0	3
% App. Total	0	100	0	0		12.5	87.5	0	0		0	100	0	0		0	66.7	33.3	0	
PHF	.000	.250	.000	.000	.250	.250	.583	.000	.000	.667	.000	.250	.000	.000	.250	.000	.250	.250	.000	.375

Counts Unlimited Inc.
25286 Jaclyn Avenue
Moreno Valley, CA 92557
951-485-7934

City of Rancho Cucamonga
N/S: Etiwanda Avenue
E/W: Foothill Boulevard
Weather: Sunny

File Name : RNCETFOAM
Site Code : 9150116
Start Date : 6/3/2009
Page No : 1

Groups Printed- 4+ Axle Trucks

	Etiwanda Avenue Southbound					Foothill Boulevard Westbound					Etiwanda Avenue Northbound					Foothill Boulevard Eastbound					
Start Time	Left	Thru	Right	RoR	App. Total	Left	Thru	Right	RoR	App. Total	Left	Thru	Right	RoR	App. Total	Left	Thru	Right	RoR	App. Total	Int. Total
07:00 AM	0	0	0	0	0	0	4	0	0	4	3	0	0	0	3	0	2	2	3	7	14
07:15 AM	0	0	0	0	0	0	0	0	0	0	2	0	1	0	3	0	1	2	0	3	6
07:30 AM	0	1	0	0	1	0	1	0	0	1	0	0	0	0	0	0	3	4	0	7	9
07:45 AM	0	0	0	0	0	0	2	0	0	2	3	0	0	0	3	0	3	4	0	7	12
Total	0	1	0	0	1	0	7	0	0	7	8	0	1	0	9	0	9	12	3	24	41
08:00 AM	0	0	0	0	0	0	0	0	0	0	6	0	0	0	6	0	2	5	2	9	15
08:15 AM	0	0	0	0	0	0	1	0	0	1	6	0	0	0	6	0	1	3	1	5	12
08:30 AM	0	0	0	0	0	0	2	0	0	2	3	0	2	0	5	0	5	4	4	13	20
08:45 AM	0	0	0	0	0	0	1	0	0	1	2	1	0	0	3	0	4	1	1	6	10
Total	0	0	0	0	0	0	4	0	0	4	17	1	2	0	20	0	12	13	8	33	57
Grand Total	0	1	0	0	1	0	11	0	0	11	25	1	3	0	29	0	21	25	11	57	98
Apprch %	0	100	0	0		0	100	0	0		86.2	3.4	10.3	0		0	36.8	43.9	19.3		
Total %	0	1	0	0	1	0	11.2	0	0	11.2	25.5	1	3.1	0	29.6	0	21.4	25.5	11.2	58.2	

	Etiwanda Avenue Southbound					Foothill Boulevard Westbound					Etiwanda Avenue Northbound					Foothill Boulevard Eastbound					
Start Time	Left	Thru	Right	RoR	App. Total		Thru	Right	RoR	App. Total		Thru	Right	RoR	App. Total		Thru	Right	RoR	App. Total	Int. Total
Peak Hour Analysis From 07:30 AM to 08:15 AM - Peak 1 of 1																					
Peak Hour for Entire Intersection Begins at 07:30 AM																					
07:30 AM	0	1	0	0	1	0	1	0	0	1	0	0	0	0	0	0	3	4	0	7	9
07:45 AM	0	0	0	0	0	0	2	0	0	2	3	0	0	0	3	0	3	4	0	7	12
08:00 AM	0	0	0	0	0	0	0	0	0	0	6	0	0	0	6	0	2	5	2	9	15
08:15 AM	0	0	0	0	0	0	1	0	0	1	6	0	0	0	6	0	1	3	1	5	12
Total Volume	0	1	0	0	1	0	4	0	0	4	15	0	0	0	15	0	9	16	3	28	48
% App. Total	0	100	0	0		0	100	0	0		100	0	0	0		0	32.1	57.1	10.7		
PHF	.000	.250	.000	.000	.250	.000	.500	.000	.000	.500	.625	.000	.000	.000	.625	.000	.750	.800	.375	.778	.800

Counts Unlimited Inc.
25286 Jaclyn Avenue
Moreno Valley, CA 92557
951-485-7934

City of Rancho Cucamonga
N/S: Etiwanda Avenue
E/W: Foothill Boulevard
Weather: Sunny

File Name : RNCETFOAM
Site Code : 9150116
Start Date : 6/3/2009
Page No : 2

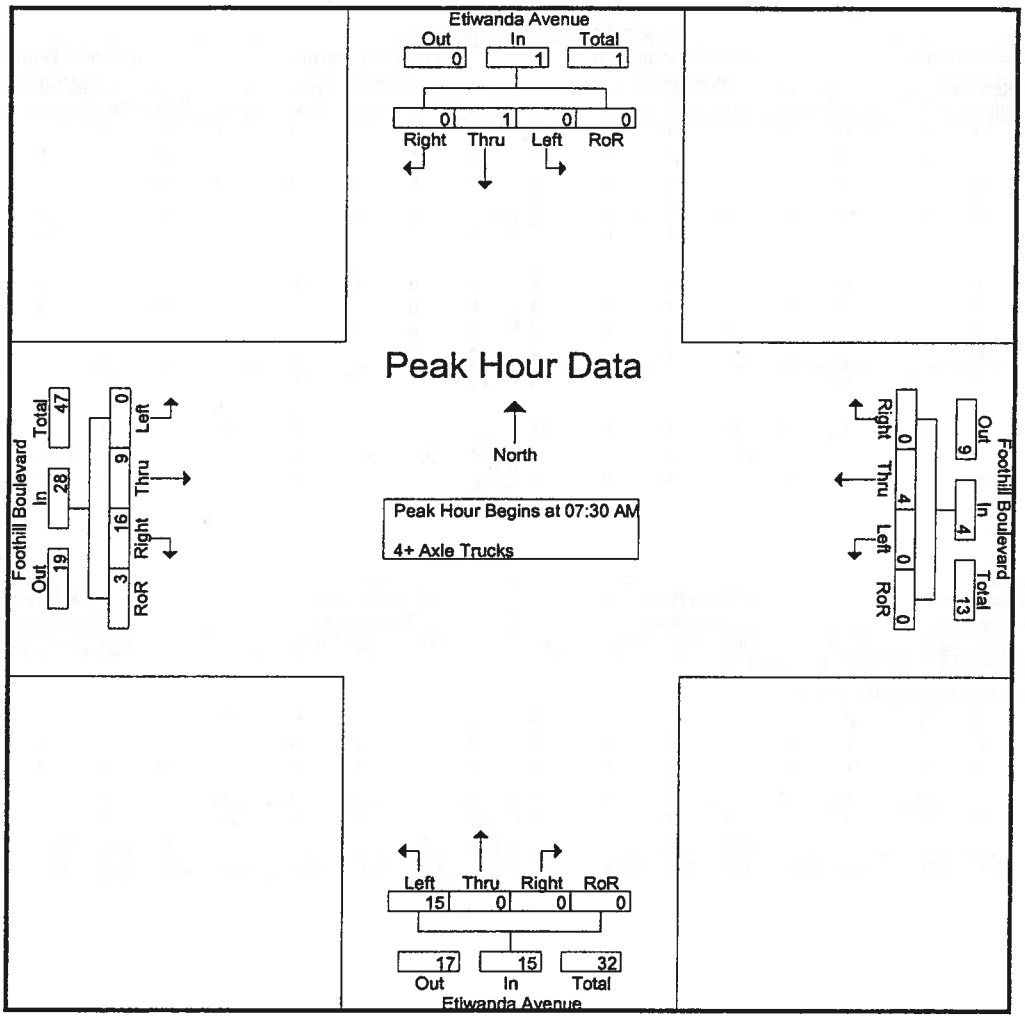

Peak Hour Analysis From 07:30 AM to 08:15 AM - Peak 1 of 1

Peak Hour for Each Approach Begins at:

	07:30 AM					07:30 AM					07:30 AM					07:30 AM				
+0 mins.	0	1	0	0	1	0	1	0	0	1	0	0	0	0	0	0	3	4	0	7
+15 mins.	0	0	0	0	0	0	2	0	0	2	3	0	0	0	3	0	3	4	0	7
+30 mins.	0	0	0	0	0	0	0	0	0	0	6	0	0	0	6	0	2	5	2	9
+45 mins.	0	0	0	0	0	0	1	0	0	1	6	0	0	0	6	0	1	3	1	5
Total Volume	0	1	0	0	1	0	4	0	0	4	15	0	0	0	15	0	9	16	3	28
% App. Total	0	100	0	0		0	100	0	0		100	0	0	0		0	32.1	57.1	10.7	
PHF	.000	.250	.000	.000	.250	.000	.500	.000	.000	.500	.625	.000	.000	.000	.625	.000	.750	.800	.375	.778

Counts Unlimited Inc.
25286 Jaclyn Avenue
Moreno Valley, CA 92557
951-485-7934

City of Rancho Cucamonga
N/S: Etiwanda Avenue
E/W: Foothill Boulevard
Weather: Sunny

File Name : RNCETFOPM
Site Code : 9150116
Start Date : 6/3/2009
Page No : 1

Groups Printed- Passenger Vehicles - Large 2 Axle Vehicles - 3 Axle Vehicles - 4+ Axle Trucks

	Etiwanda Avenue Southbound					Foothill Boulevard Westbound					Etiwanda Avenue Northbound					Foothill Boulevard Eastbound					
Start Time	Left	Thru	Right	RoR	App. Total	Left	Thru	Right	RoR	App. Total	Left	Thru	Right	RoR	App. Total	Left	Thru	Right	RoR	App. Total	Int. Total
04:00 PM	16	45	29	7	97	19	178	12	8	217	35	73	35	21	164	48	217	19	24	308	786
04:15 PM	11	57	46	8	122	36	175	9	2	222	49	72	26	10	157	72	216	15	24	327	828
04:30 PM	13	46	35	12	106	26	198	20	12	256	51	75	37	18	181	50	206	14	20	290	833
04:45 PM	12	43	30	15	100	29	161	7	7	204	50	92	35	11	188	61	206	9	15	291	783
Total	52	191	140	42	425	110	712	48	29	899	185	312	133	60	690	231	845	57	83	1216	3230
05:00 PM	16	46	33	11	106	26	143	19	1	189	43	93	40	15	191	52	234	12	16	314	800
05:15 PM	13	34	29	5	81	23	186	14	3	226	56	104	30	5	195	56	230	8	23	317	819
05:30 PM	13	23	18	9	63	26	173	8	3	210	43	107	36	8	194	64	240	10	16	330	797
05:45 PM	16	42	23	5	86	26	134	11	8	179	47	93	31	9	180	70	205	18	11	304	749
Total	58	145	103	30	336	101	636	52	15	804	189	397	137	37	760	242	909	48	66	1265	3165
Grand Total	110	336	243	72	761	211	1348	100	44	1703	374	709	270	97	1450	473	1754	105	149	2481	6395
Apprch %	14.5	44.2	31.9	9.5		12.4	79.2	5.9	2.6		25.8	48.9	18.6	6.7		19.1	70.7	4.2	6		
Total %	1.7	5.3	3.8	1.1	11.9	3.3	21.1	1.6	0.7	26.6	5.8	11.1	4.2	1.5	22.7	7.4	27.4	1.6	2.3	38.8	
Passenger Vehicles							1322										1726				
% Passenger Vehicles	100	97.6	99.6	100	98.8	93.8	98.1	100	100	97.7	97.6	99.7	96.7	100	98.6	99.8	98.4	88.6	97.3	98.2	98.2
Large 2 Axle Vehicles																					
% Large 2 Axle Vehicles	0	1.2	0.4	0	0.7	0.9	1.2	0	0	1.1	0.3	0.1	1.1	0	0.3	0.2	0.6	1	0	0.5	0.6
3 Axle Vehicles	0	4	0	0	4	7	1	0	0	8	1	0	1	0	2	0	2	2	0	4	18
% 3 Axle Vehicles	0	1.2	0	0	0.5	3.3	0.1	0	0	0.5	0.3	0	0.4	0	0.1	0	0.1	1.9	0	0.2	0.3
4+ Axle Trucks	0	0	0	0	0	4	9	0	0	13	7	1	5	0	13	0	15	9	4	28	54
% 4+ Axle Trucks																					

	Etiwanda Avenue Southbound					Foothill Boulevard Westbound					Etiwanda Avenue Northbound					Foothill Boulevard Eastbound					
Start Time	Left	Thru	Right	RoR	App. Total	Left	Thru	Right	RoR	App. Total	Left	Thru	Right	RoR	App. Total	Left	Thru	Right	RoR	App. Total	Int. Total
Peak Hour Analysis From 04:00 PM to 05:45 PM - Peak 1 of 1																					
Peak Hour for Entire Intersection Begins at 04:15 PM																					
04:15 PM	11	57	46	8	**122**	**36**	175	9	2	222	49	72	26	10	157	72	216	**15**	**24**	327	828
04:30 PM	13	46	35	12	106	26	**198**	**20**	**12**	**256**	**51**	75	37	**18**	181	50	206	14	20	290	**833**
04:45 PM	12	43	30	**15**	100	29	161	7	7	204	50	92	35	11	188	61	206	9	15	291	783
05:00 PM	**16**	46	33	11	106	26	143	19	1	189	43	**93**	**40**	15	**191**	52	**234**	12	16	314	800
Total Volume	52	192	144	46	434	117	677	55	22	871	193	332	138	54	717	235	862	50	75	1222	3244
% App. Total	12	44.2	33.2	10.6		13.4	77.7	6.3	2.5		26.9	46.3	19.2	7.5		19.2	70.5	4.1	6.1		
PHF	.813	.842	.783	.767	.889	.813	.855	.688	.458	.851	.946	.892	.863	.750	.938	.816	.921	.833	.781	.934	.974

Counts Unlimited Inc.
25286 Jaclyn Avenue
Moreno Valley, CA 92557
951-485-7934

City of Rancho Cucamonga
N/S: Etiwanda Avenue
E/W: Foothill Boulevard
Weather: Sunny

File Name : RNCETFOPM
Site Code : 9150116
Start Date : 6/3/2009
Page No : 2

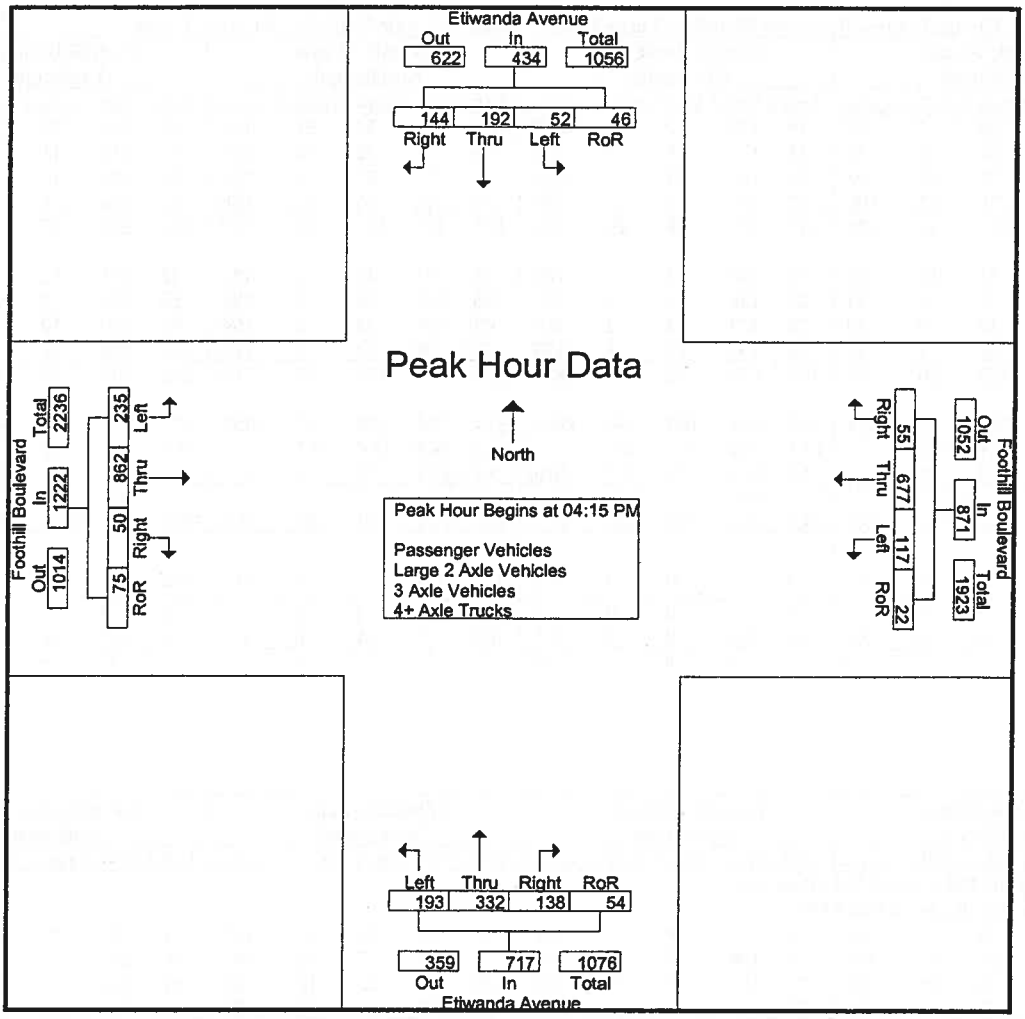

Peak Hour Analysis From 04:00 PM to 05:45 PM - Peak 1 of 1

Peak Hour for Each Approach Begins at:

	04:15 PM					04:00 PM					04:45 PM					05:00 PM				
+0 mins.	11	57	46	8	122	19	178	12	8	217	50	92	35	11	188	52	234	12	16	314
+15 mins.	13	46	35	12	106	36	175	9	2	222	43	93	40	15	191	56	230	8	23	317
+30 mins.	12	43	30	15	100	26	198	20	12	256	56	104	30	5	195	64	240	10	16	330
+45 mins.	16	46	33	11	106	29	161	7	7	204	43	107	36	8	194	70	205	18	11	304
Total Volume	52	192	144	46	434	110	712	48	29	899	192	396	141	39	768	242	909	48	66	1265
% App. Total	12	44.2	33.2	10.6		12.2	79.2	5.3	3.2		25	51.6	18.4	5.1		19.1	71.9	3.8	5.2	
PHF	.813	.842	.783	.767	.889	.764	.899	.600	.604	.878	.857	.925	.881	.650	.985	.864	.947	.667	.717	.958

Counts Unlimited Inc.
25286 Jaclyn Avenue
Moreno Valley, CA 92557
951-485-7934

City of Rancho Cucamonga
N/S: Etiwanda Avenue
E/W: Foothill Boulevard
Weather: Sunny

File Name : RNCETFOPM
Site Code : 9150116
Start Date : 6/3/2009
Page No : 1

Groups Printed- Passenger Vehicles

	Etiwanda Avenue Southbound					Foothill Boulevard Westbound					Etiwanda Avenue Northbound					Foothill Boulevard Eastbound					
Start Time	Left	Thru	Right	RoR	App. Total	Left	Thru	Right	RoR	App. Total	Left	Thru	Right	RoR	App. Total	Left	Thru	Right	RoR	App. Total	Int. Total
04:00 PM	16	43	29	7	95	18	175	12	8	213	33	73	33	21	160	48	214	18	24	304	772
04:15 PM	11	57	46	8	122	32	168	9	2	211	48	71	25	10	154	72	213	13	23	321	808
04:30 PM	13	43	35	12	103	24	191	20	12	247	50	75	37	18	180	50	201	12	19	282	812
04:45 PM	12	41	30	15	98	29	160	7	7	203	47	91	34	11	183	60	203	7	14	284	768
Total	52	184	140	42	418	103	694	48	29	874	178	310	129	60	677	230	831	50	80	1191	3160
05:00 PM	16	46	33	11	106	26	143	19	1	189	43	93	36	15	187	52	231	12	16	311	793
05:15 PM	13	34	29	5	81	21	182	14	3	220	55	104	30	5	194	56	228	7	22	313	808
05:30 PM	13	23	17	9	62	23	172	8	3	206	43	107	36	8	194	64	235	8	16	323	785
05:45 PM	16	41	23	5	85	25	131	11	8	175	46	93	30	9	178	70	201	16	11	298	736
Total	58	144	102	30	334	95	628	52	15	790	187	397	132	37	753	242	895	43	65	1245	3122
Grand Total	110	328	242	72	752	198	1322	100	44	1664	365	707	261	97	1430	472	1726	93	145	2436	6282
Apprch %	14.6	43.6	32.2	9.6		11.9	79.4	6	2.6		25.5	49.4	18.3	6.8		19.4	70.9	3.8	6		
Total %	1.8	5.2	3.9	1.1	12	3.2	21	1.6	0.7	26.5	5.8	11.3	4.2	1.5	22.8	7.5	27.5	1.5	2.3	38.8	

	Etiwanda Avenue Southbound					Foothill Boulevard Westbound					Etiwanda Avenue Northbound					Foothill Boulevard Eastbound					
Start Time	Left	Thru	Right	RoR	App. Total		Thru	Right	RoR	App. Total		Thru	Right	RoR	App. Total		Thru	Right	RoR	App. Total	Int. Total
Peak Hour Analysis From 04:15 PM to 05:00 PM - Peak 1 of 1																					
Peak Hour for Entire Intersection Begins at 04:15 PM																					
04:15 PM	11	**57**	**46**	8	**122**	**32**	168	9	2	211	48	71	25	10	154	**72**	213	**13**	**23**	**321**	808
04:30 PM	13	43	35	12	103	24	**191**	**20**	**12**	**247**	**50**	75	**37**	**18**	180	50	201	12	19	282	**812**
04:45 PM	12	41	30	**15**	98	29	160	7	7	203	47	91	34	11	183	60	203	7	14	284	768
05:00 PM	**16**	46	33	11	106	26	143	19	1	189	43	**93**	36	15	**187**	52	**231**	12	16	311	793
Total Volume	52	187	144	46	429	111	662	55	22	850	188	330	132	54	704	234	848	44	72	1198	3181
% App. Total	12.1	43.6	33.6	10.7		13.1	77.9	6.5	2.6		26.7	46.9	18.8	7.7		19.5	70.8	3.7	6		
PHF	.813	.820	.783	.767	.879	.867	.866	.688	.458	.860	.940	.887	.892	.750	.941	.813	.918	.846	.783	.933	.979

Counts Unlimited Inc.
25286 Jaclyn Avenue
Moreno Valley, CA 92557
951-485-7934

City of Rancho Cucamonga
N/S: Etiwanda Avenue
E/W: Foothill Boulevard
Weather: Sunny

File Name : RNCETFOPM
Site Code : 9150116
Start Date : 6/3/2009
Page No : 2

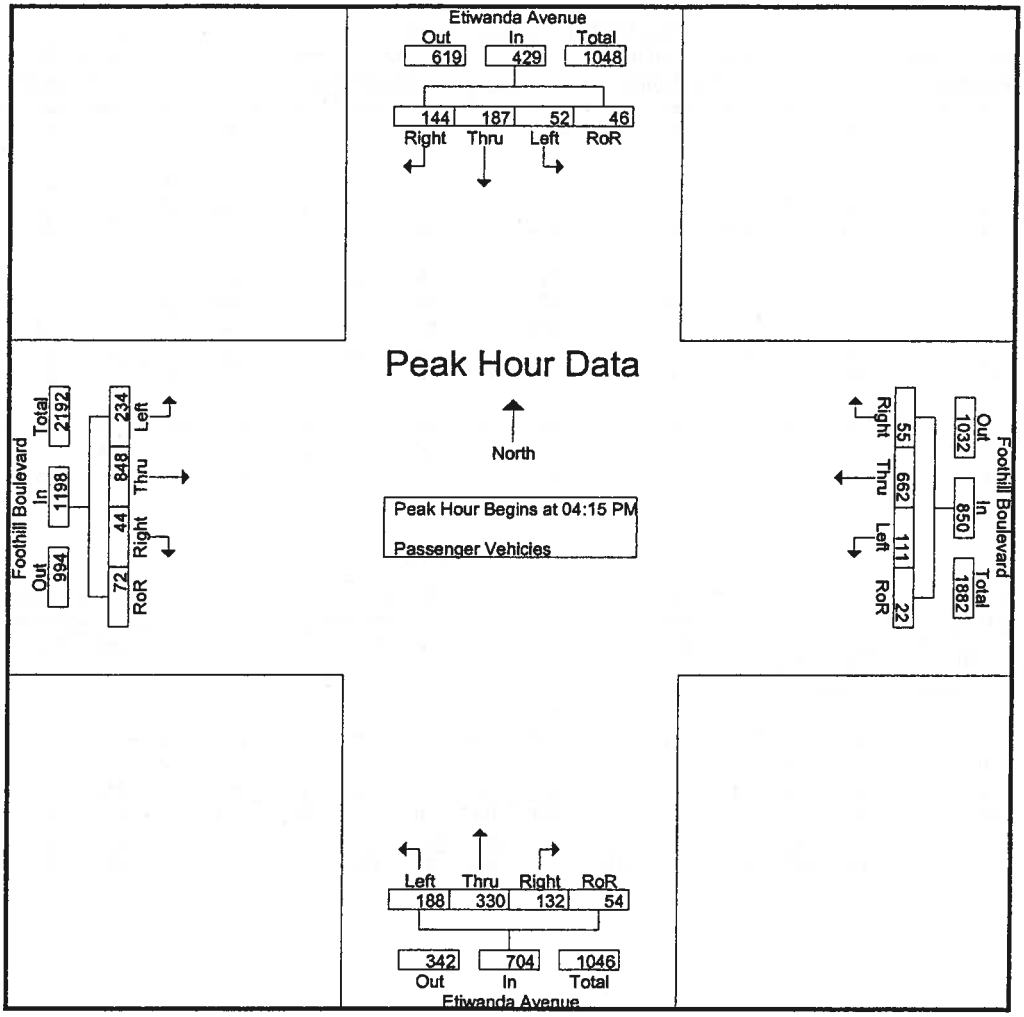

Peak Hour Analysis From 04:15 PM to 05:00 PM - Peak 1 of 1

Peak Hour for Each Approach Begins at:

	04:15 PM					04:15 PM					04:15 PM					04:15 PM				
+0 mins.	11	57	46	8	122	32	168	9	2	211	48	71	25	10	154	72	213	13	23	321
+15 mins.	13	43	35	12	103	24	191	20	12	247	50	75	37	18	180	50	201	12	19	282
+30 mins.	12	41	30	15	98	29	160	7	7	203	47	91	34	11	183	60	203	7	14	284
+45 mins.	16	46	33	11	106	26	143	19	1	189	43	93	36	15	187	52	231	12	16	311
Total Volume	52	187	144	46	429	111	662	55	22	850	188	330	132	54	704	234	848	44	72	1198
% App. Total	12.1	43.6	33.6	10.7		13.1	77.9	6.5	2.6		26.7	46.9	18.8	7.7		19.5	70.8	3.7	6	
PHF	.813	.820	.783	.767	.879	.867	.866	.688	.458	.860	.940	.887	.892	.750	.941	.813	.918	.846	.783	.933

Counts Unlimited Inc.
25286 Jaclyn Avenue
Moreno Valley, CA 92557
951-485-7934

City of Rancho Cucamonga
N/S: Etiwanda Avenue
E/W: Foothill Boulevard
Weather: Sunny

File Name : RNCETFOPM
Site Code : 9150116
Start Date : 6/3/2009
Page No : 1

Groups Printed- Large 2 Axle Vehicles

	Etiwanda Avenue Southbound					Foothill Boulevard Westbound					Etiwanda Avenue Northbound					Foothill Boulevard Eastbound					
Start Time	Left	Thru	Right	RoR	App. Total	Left	Thru	Right	RoR	App. Total	Left	Thru	Right	RoR	App. Total	Left	Thru	Right	RoR	App. Total	Int. Total
04:00 PM	0	1	0	0	1	0	2	0	0	2	0	0	1	0	1	0	1	0	0	1	5
04:15 PM	0	0	0	0	0	1	2	0	0	3	0	1	0	0	1	0	2	0	0	2	6
04:30 PM	0	2	0	0	2	1	3	0	0	4	0	0	0	0	0	0	1	0	0	1	7
04:45 PM	0	0	0	0	0	0	1	0	0	1	1	0	0	0	1	1	2	0	0	3	5
Total	0	3	0	0	3	2	8	0	0	10	1	1	1	0	3	1	6	0	0	7	23
05:00 PM	0	0	0	0	0	0	0	0	0	0	0	0	2	0	2	0	1	0	0	1	3
05:15 PM	0	0	0	0	0	0	4	0	0	4	0	0	0	0	0	0	1	0	0	1	5
05:30 PM	0	0	1	0	1	0	1	0	0	1	0	0	0	0	0	0	2	0	0	2	4
05:45 PM	0	1	0	0	1	0	3	0	0	3	0	0	0	0	0	0	1	1	0	2	6
Total	0	1	1	0	2	0	8	0	0	8	0	0	2	0	2	0	5	1	0	6	18
Grand Total	0	4	1	0	5	2	16	0	0	18	1	1	3	0	5	1	11	1	0	13	41
Apprch %	0	80	20	0		11.1	88.9	0	0		20	20	60	0		7.7	84.6	7.7	0		
Total %	0	9.8	2.4	0	12.2	4.9	39	0	0	43.9	2.4	2.4	7.3	0	12.2	2.4	26.8	2.4	0	31.7	

	Etiwanda Avenue Southbound					Foothill Boulevard Westbound					Etiwanda Avenue Northbound					Foothill Boulevard Eastbound					
Start Time	Left	Thru	Right	RoR	App. Total		Thru	Right	RoR	App. Total		Thru	Right	RoR	App. Total		Thru	Right	RoR	App. Total	Int. Total
Peak Hour Analysis From 04:15 PM to 05:00 PM - Peak 1 of 1																					
Peak Hour for Entire Intersection Begins at 04:15 PM																					
04:15 PM	0	0	0	0	0	1	2	0	0	3	0	1	0	0	1	0	2	0	0	2	6
04:30 PM	0	2	0	0	2	1	3	0	0	4	0	0	0	0	0	0	1	0	0	1	7
04:45 PM	0	0	0	0	0	0	1	0	0	1	1	0	0	0	1	1	2	0	0	3	5
05:00 PM	0	0	0	0	0	0	0	0	0	0	0	0	2	0	2	0	1	0	0	1	3
Total Volume	0	2	0	0	2	2	6	0	0	8	1	1	2	0	4	1	6	0	0	7	21
% App. Total	0	100	0	0		25	75	0	0		25	25	50	0		14.3	85.7	0	0		
PHF	.000	.250	.000	.000	.250	.500	.500	.000	.000	.500	.250	.250	.250	.000	.500	.250	.750	.000	.000	.583	.750

Counts Unlimited Inc.
25286 Jaclyn Avenue
Moreno Valley, CA 92557
951-485-7934

City of Rancho Cucamonga
N/S: Etiwanda Avenue
E/W: Foothill Boulevard
Weather: Sunny

File Name : RNCETFOPM
Site Code : 9150116
Start Date : 6/3/2009
Page No : 2

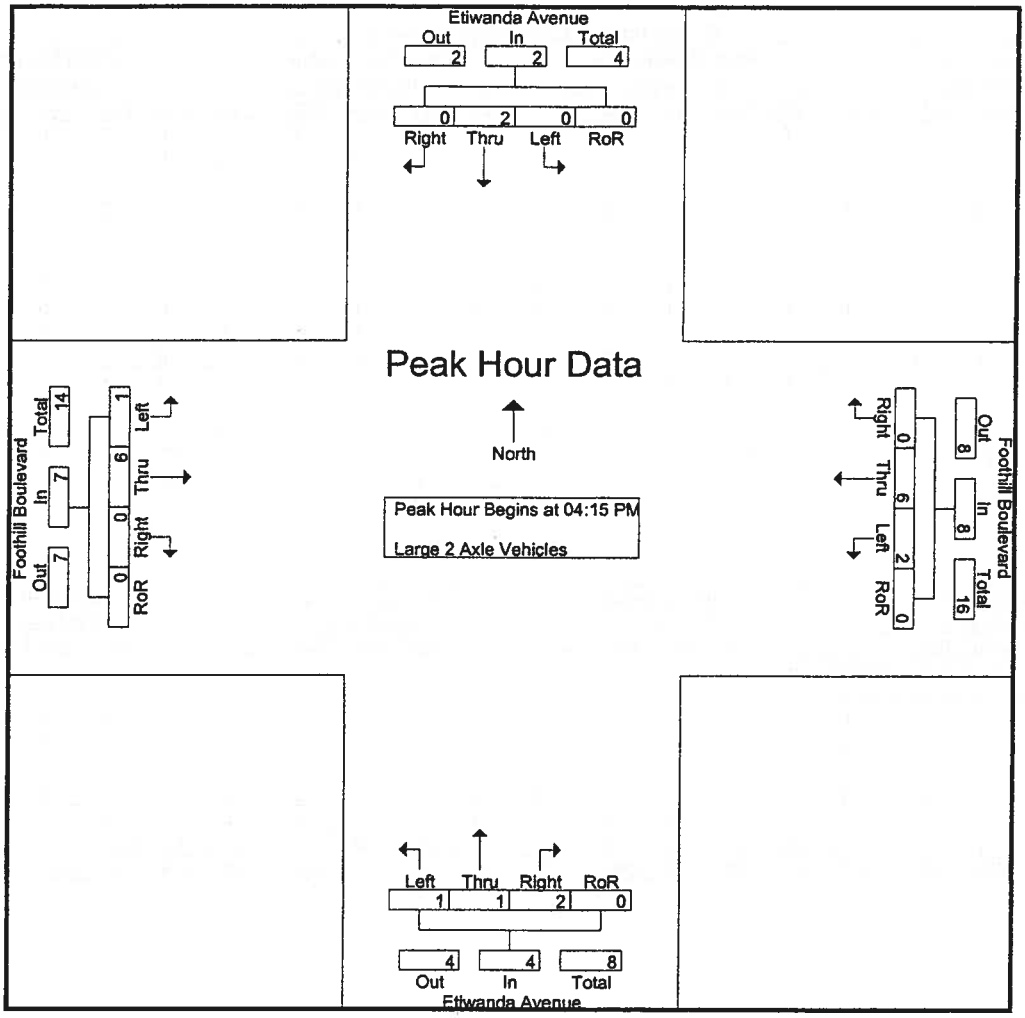

Peak Hour Analysis From 04:15 PM to 05:00 PM - Peak 1 of 1

Peak Hour for Each Approach Begins at:

	04:15 PM					04:15 PM					04:15 PM					04:15 PM				
+0 mins.	0	0	0	0	0	1	2	0	0	3	0	1	0	0	1	0	2	0	0	2
+15 mins.	0	2	0	0	2	1	3	0	0	4	0	0	0	0	0	0	1	0	0	1
+30 mins.	0	0	0	0	0	0	1	0	0	1	1	0	0	0	1	1	2	0	0	3
+45 mins.	0	0	0	0	0	0	0	0	0	0	0	0	2	0	2	0	1	0	0	1
Total Volume	0	2	0	0	2	2	6	0	0	8	1	1	2	0	4	1	6	0	0	7
% App. Total	0	100	0	0		25	75	0	0		25	25	50	0		14.3	85.7	0	0	
PHF	.000	.250	.000	.000	.250	.500	.500	.000	.000	.500	.250	.250	.250	.000	.500	.250	.750	.000	.000	.583

Counts Unlimited Inc.
25286 Jaclyn Avenue
Moreno Valley, CA 92557
951-485-7934

City of Rancho Cucamonga
N/S: Etiwanda Avenue
E/W: Foothill Boulevard
Weather: Sunny

File Name : RNCETFOPM
Site Code : 9150116
Start Date : 6/3/2009
Page No : 1

Groups Printed- 3 Axle Vehicles

	Etiwanda Avenue Southbound					Foothill Boulevard Westbound					Etiwanda Avenue Northbound					Foothill Boulevard Eastbound					
Start Time	Left	Thru	Right	RoR	App. Total	Left	Thru	Right	RoR	App. Total	Left	Thru	Right	RoR	App. Total	Left	Thru	Right	RoR	App. Total	Int. Total
04:00 PM	0	1	0	0	1	1	0	0	0	1	0	0	1	0	1	0	1	0	0	1	4
04:15 PM	0	0	0	0	0	3	0	0	0	3	0	0	0	0	0	0	0	0	0	0	3
04:30 PM	0	1	0	0	1	1	1	0	0	2	0	0	0	0	0	0	0	0	0	0	3
04:45 PM	0	2	0	0	2	0	0	0	0	0	0	0	0	0	0	0	0	0	0	0	2
Total	0	4	0	0	4	5	1	0	0	6	0	0	1	0	1	0	1	0	0	1	12
05:00 PM	0	0	0	0	0	0	0	0	0	0	0	0	0	0	0	0	0	0	0	0	0
05:15 PM	0	0	0	0	0	1	0	0	0	1	0	0	0	0	0	0	0	0	0	0	1
05:30 PM	0	0	0	0	0	1	0	0	0	1	0	0	0	0	0	0	0	1	0	1	2
05:45 PM	0	0	0	0	0	0	0	0	0	0	1	0	0	0	1	0	1	1	0	2	3
Total	0	0	0	0	0	2	0	0	0	2	1	0	0	0	1	0	1	2	0	3	6
Grand Total	0	4	0	0	4	7	1	0	0	8	1	0	1	0	2	0	2	2	0	4	18
Apprch %	0	100	0	0		87.5	12.5	0	0		50	0	50	0		0	50	50	0		
Total %	0	22.2	0	0	22.2	38.9	5.6	0	0	44.4	5.6	0	5.6	0	11.1	0	11.1	11.1	0	22.2	

	Etiwanda Avenue Southbound					Foothill Boulevard Westbound					Etiwanda Avenue Northbound					Foothill Boulevard Eastbound					
Start Time	Left	Thru	Right	RoR	App. Total		Thru	Right	RoR	App. Total		Thru	Right	RoR	App. Total		Thru	Right	RoR	App. Total	Int. Total
Peak Hour Analysis From 04:15 PM to 05:00 PM - Peak 1 of 1																					
Peak Hour for Entire Intersection Begins at 04:15 PM																					
04:15 PM	0	0	0	0	0	3	0	0	0	3	0	0	0	0	0	0	0	0	0	0	3
04:30 PM	0	1	0	0	1	1	1	0	0	2	0	0	0	0	0	0	0	0	0	0	3
04:45 PM	0	2	0	0	2	0	0	0	0	0	0	0	0	0	0	0	0	0	0	0	2
05:00 PM	0	0	0	0	0	0	0	0	0	0	0	0	0	0	0	0	0	0	0	0	0
Total Volume	0	3	0	0	3	4	1	0	0	5	0	0	0	0	0	0	0	0	0	0	8
% App. Total	0	100	0	0		80	20	0	0		0	0	0	0		0	0	0	0		
PHF	.000	.375	.000	.000	.375	.333	.250	.000	.000	.417	.000	.000	.000	.000	.000	.000	.000	.000	.000	.000	.667

Counts Unlimited Inc.
25286 Jaclyn Avenue
Moreno Valley, CA 92557
951-485-7934

City of Rancho Cucamonga
N/S: Etiwanda Avenue
E/W: Foothill Boulevard
Weather: Sunny

File Name : RNCETFOPM
Site Code : 9150116
Start Date : 6/3/2009
Page No : 2

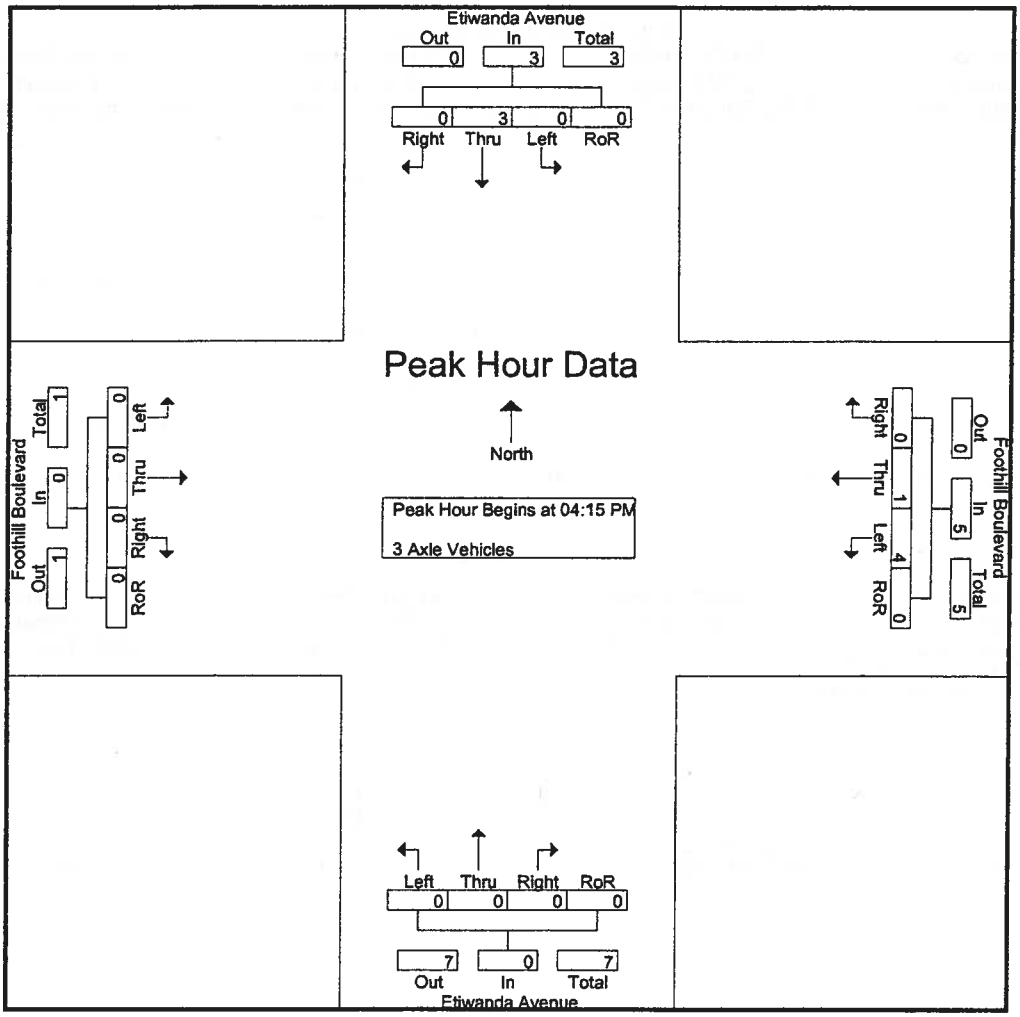

Peak Hour Analysis From 04:15 PM to 05:00 PM - Peak 1 of 1

Peak Hour for Each Approach Begins at:

	04:15 PM					04:15 PM					04:15 PM					04:15 PM				
+0 mins.	0	0	0	0	0	3	0	0	0	3	0	0	0	0	0	0	0	0	0	0
+15 mins.	0	1	0	0	1	1	1	0	0	2	0	0	0	0	0	0	0	0	0	0
+30 mins.	0	2	0	0	2	0	0	0	0	0	0	0	0	0	0	0	0	0	0	0
+45 mins.	0	0	0	0	0	0	0	0	0	0	0	0	0	0	0	0	0	0	0	0
Total Volume	0	3	0	0	3	4	1	0	0	5	0	0	0	0	0	0	0	0	0	0
% App. Total	0	100	0	0		80	20	0	0		0	0	0	0		0	0	0	0	
PHF	.000	.375	.000	.000	.375	.333	.250	.000	.000	.417	.000	.000	.000	.000	.000	.000	.000	.000	.000	.000

Counts Unlimited Inc.
25286 Jaclyn Avenue
Moreno Valley, CA 92557
951-485-7934

City of Rancho Cucamonga
N/S: Etiwanda Avenue
E/W: Foothill Boulevard
Weather: Sunny

File Name : RNCETFOPM
Site Code : 9150116
Start Date : 6/3/2009
Page No : 1

Groups Printed- 4+ Axle Trucks

	Etiwanda Avenue Southbound					Foothill Boulevard Westbound					Etiwanda Avenue Northbound					Foothill Boulevard Eastbound					
Start Time	Left	Thru	Right	RoR	App. Total	Left	Thru	Right	RoR	App. Total	Left	Thru	Right	RoR	App. Total	Left	Thru	Right	RoR	App. Total	Int. Total
04:00 PM	0	0	0	0	0	0	1	0	0	1	2	0	0	0	2	0	1	1	0	2	5
04:15 PM	0	0	0	0	0	0	5	0	0	5	1	0	1	0	2	0	1	2	1	4	11
04:30 PM	0	0	0	0	0	0	3	0	0	3	1	0	0	0	1	0	4	2	1	7	11
04:45 PM	0	0	0	0	0	0	0	0	0	0	2	1	1	0	4	0	1	2	1	4	8
Total	0	0	0	0	0	0	9	0	0	9	6	1	2	0	9	0	7	7	3	17	35
05:00 PM	0	0	0	0	0	0	0	0	0	0	0	0	2	0	2	0	2	0	0	2	4
05:15 PM	0	0	0	0	0	1	0	0	0	1	1	0	0	0	1	0	1	1	1	3	5
05:30 PM	0	0	0	0	0	2	0	0	0	2	0	0	0	0	0	0	3	1	0	4	6
05:45 PM	0	0	0	0	0	1	0	0	0	1	0	0	1	0	1	0	2	0	0	2	4
Total	0	0	0	0	0	4	0	0	0	4	1	0	3	0	4	0	8	2	1	11	19
Grand Total	0	0	0	0	0	4	9	0	0	13	7	1	5	0	13	0	15	9	4	28	54
Apprch %	0	0	0	0		30.8	69.2	0	0		53.8	7.7	38.5	0		0	53.6	32.1	14.3		
Total %	0	0	0	0	0	7.4	16.7	0	0	24.1	13	1.9	9.3	0	24.1	0	27.8	16.7	7.4	51.9	

	Etiwanda Avenue Southbound					Foothill Boulevard Westbound					Etiwanda Avenue Northbound					Foothill Boulevard Eastbound					
Start Time	Left	Thru	Right	RoR	App. Total		Thru	Right	RoR	App. Total		Thru	Right	RoR	App. Total		Thru	Right	RoR	App. Total	Int. Total
Peak Hour Analysis From 04:15 PM to 05:00 PM - Peak 1 of 1																					
Peak Hour for Entire Intersection Begins at 04:15 PM																					
04:15 PM	0	0	0	0	0	0	5	0	0	5	1	0	1	0	2	0	1	2	1	4	11
04:30 PM	0	0	0	0	0	0	3	0	0	3	1	0	0	0	1	0	4	2	1	7	11
04:45 PM	0	0	0	0	0	0	0	0	0	0	2	1	1	0	4	0	1	2	1	4	8
05:00 PM	0	0	0	0	0	0	0	0	0	0	0	0	2	0	2	0	2	0	0	2	4
Total Volume	0	0	0	0	0	0	8	0	0	8	4	1	4	0	9	0	8	6	3	17	34
% App. Total	0	0	0	0		0	100	0	0		44.4	11.1	44.4	0		0	47.1	35.3	17.6		
PHF	.000	.000	.000	.000	.000	.000	.400	.000	.000	.400	.500	.250	.500	.000	.563	.000	.500	.750	.750	.607	.773

Counts Unlimited Inc.
25286 Jaclyn Avenue
Moreno Valley, CA 92557
951-485-7934

City of Rancho Cucamonga
N/S: Etiwanda Avenue
E/W: Foothill Boulevard
Weather: Sunny

File Name : RNCETFOPM
Site Code : 9150116
Start Date : 6/3/2009
Page No : 2

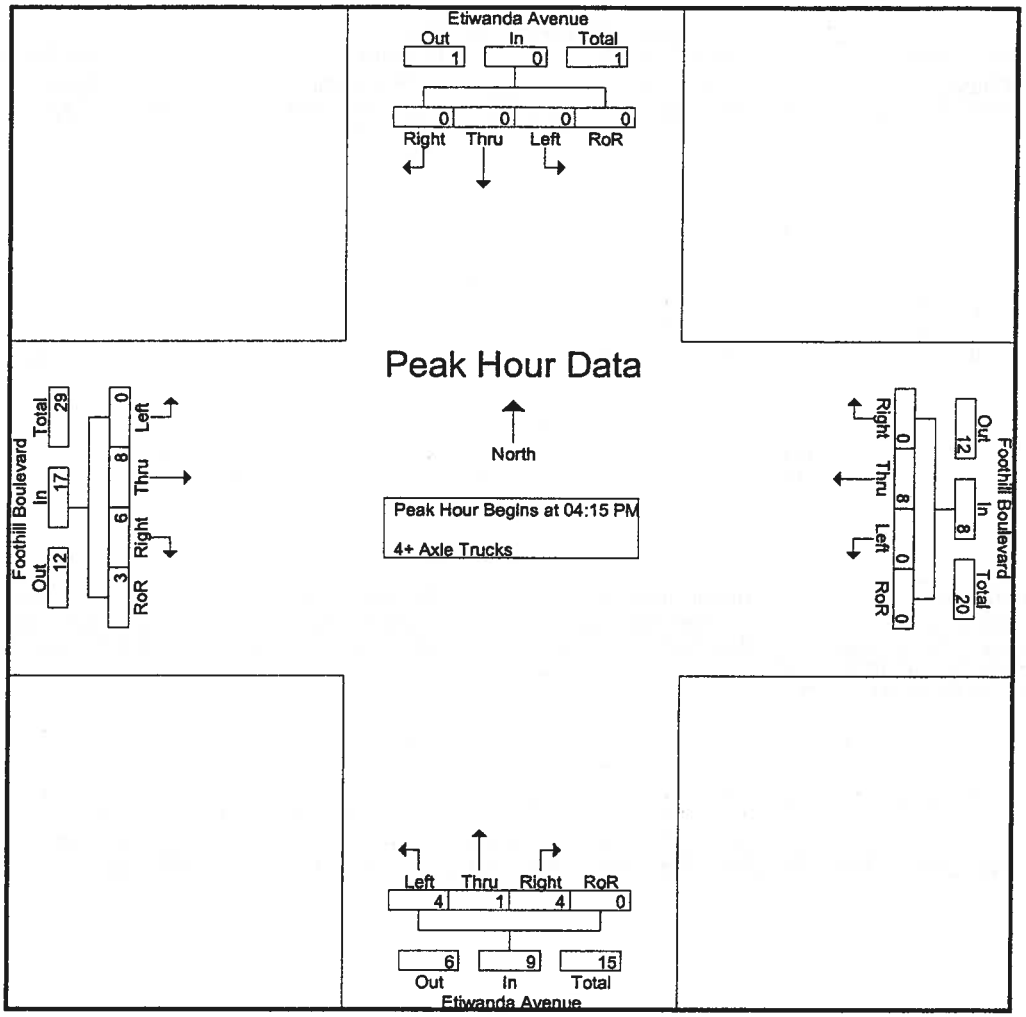

Peak Hour Analysis From 04:15 PM to 05:00 PM - Peak 1 of 1

Peak Hour for Each Approach Begins at:

	04:15 PM					04:15 PM					04:15 PM					04:15 PM				
+0 mins.	0	0	0	0	0	0	5	0	0	5	1	0	1	0	2	0	1	2	1	4
+15 mins.	0	0	0	0	0	0	3	0	0	3	1	0	0	0	1	0	4	2	1	7
+30 mins.	0	0	0	0	0	0	0	0	0	0	2	1	1	0	4	0	1	2	1	4
+45 mins.	0	0	0	0	0	0	0	0	0	0	0	0	2	0	2	0	2	0	0	2
Total Volume	0	0	0	0	0	0	8	0	0	8	4	1	4	0	9	0	8	6	3	17
% App. Total	0	0	0	0		0	100	0	0		44.4	11.1	44.4	0		0	47.1	35.3	17.6	
PHF	.000	.000	.000	.000	.000	.000	.400	.000	.000	.400	.500	.250	.500	.000	.563	.000	.500	.750	.750	.607

PASSENGER CAR EQUIVALENCY PEAK HOUR COUNT SUMMARY

INTERSECTION 21
Etiwanda Avenue (NS) / Arrow Highway (EW)

AM PEAK HOUR

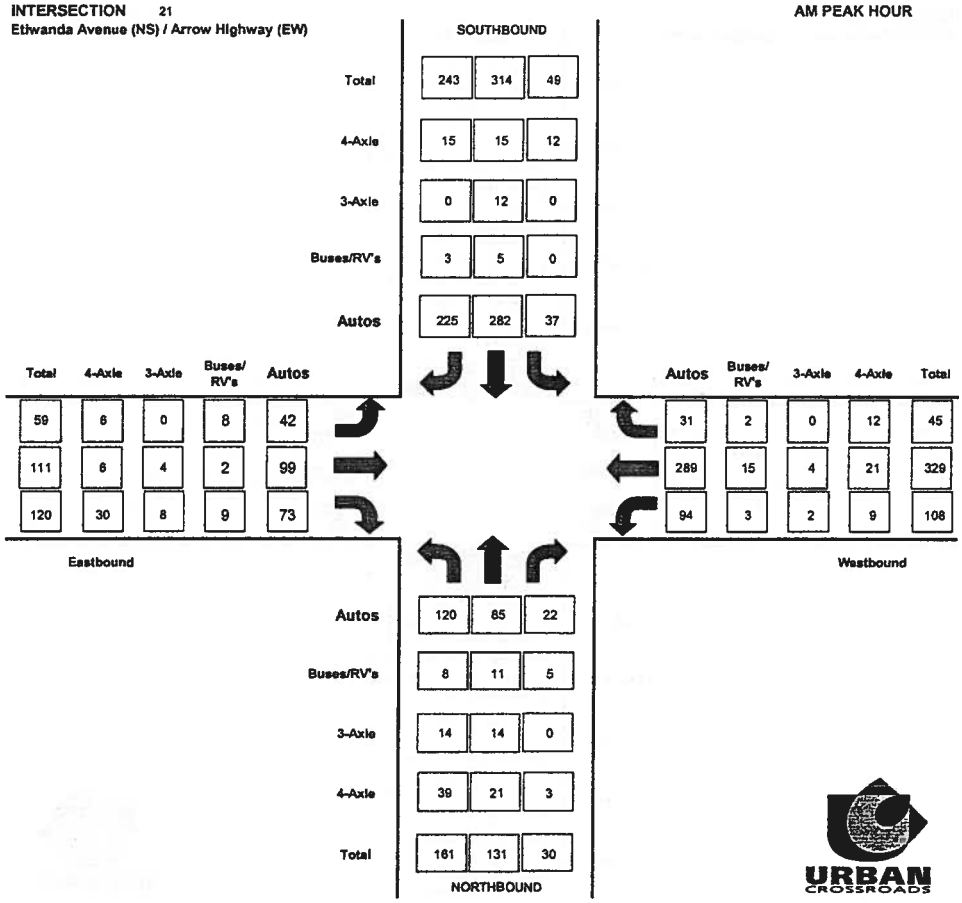

INTERSECTION 21
Etiwanda Avenue (NS) / Arrow Highway (EW)

PM PEAK HOUR

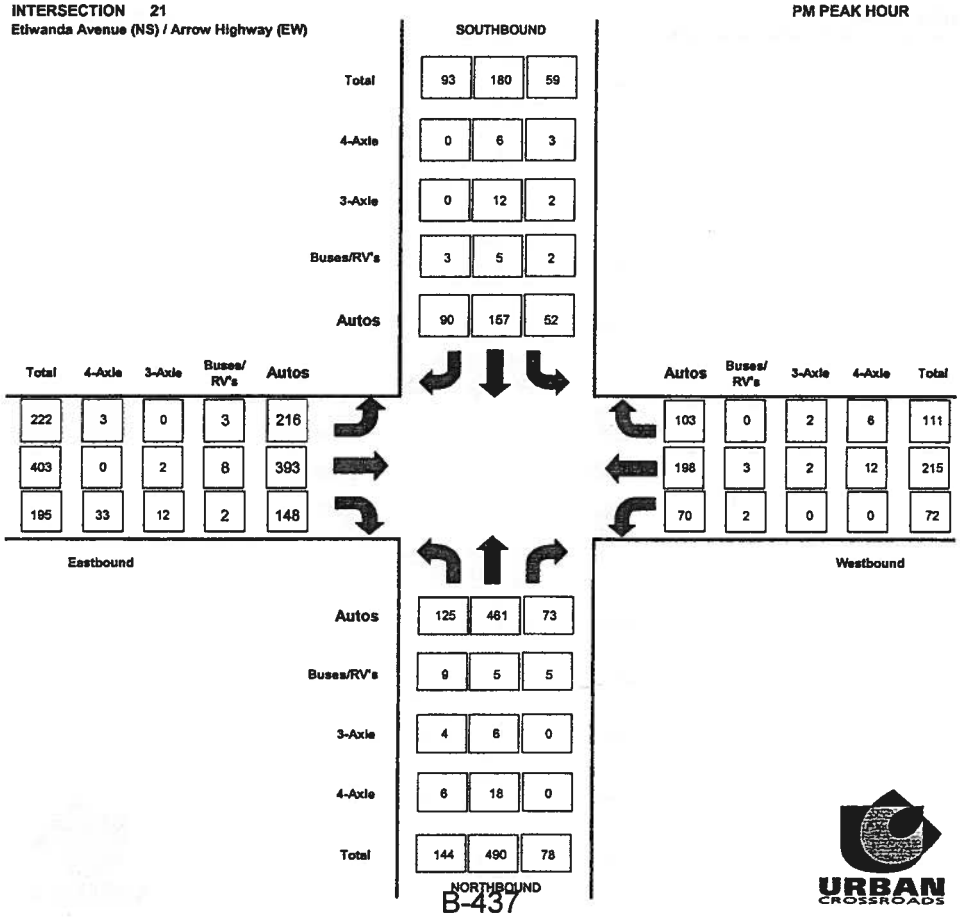

RAW PEAK HOUR COUNT SUMMARY

INTERSECTION 21
Etiwanda Avenue (NS) / Arrow Highway (EW)

AM PEAK HOUR

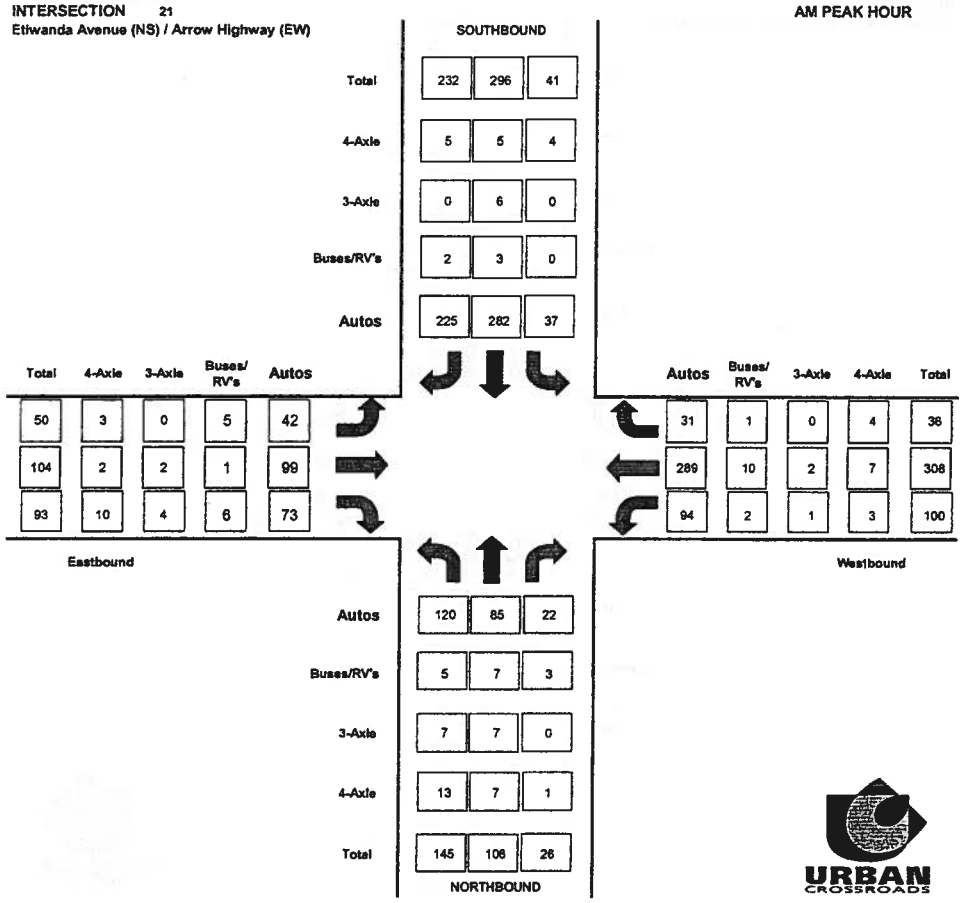

INTERSECTION 21
Etiwanda Avenue (NS) / Arrow Highway (EW)

PM PEAK HOUR

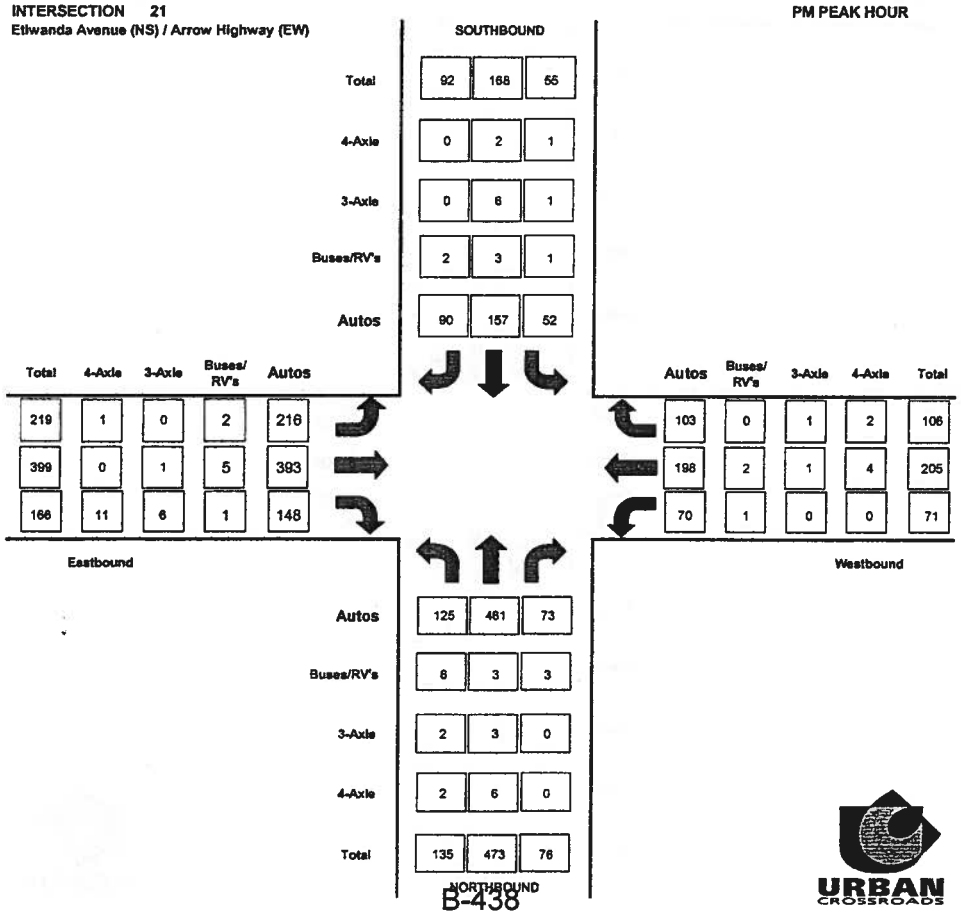

Counts Unlimited Inc.
25286 Jaclyn Avenue
Moreno Valley, CA 92557
951-485-7934

City of Rancho Cucamonga
N/S: Etiwanda Avenue
E/W: Arrow Highway
Weather: Sunny

File Name : RNCETARAM
Site Code : 9150097
Start Date : 6/2/2009
Page No : 1

Groups Printed- Passenger Vehicles - Large 2 Axle Vehicles - 3 Axle Vehicles - 4+ Axle Trucks

	Etiwanda Avenue Southbound					Arrow Highway Westbound					Etiwanda Avenue Northbound					Arrow Highway Eastbound					
Start Time	Left	Thru	Right	RoR	App. Total	Left	Thru	Right	RoR	App. Total	Left	Thru	Right	RoR	App. Total	Left	Thru	Right	RoR	App. Total	Int. Total
07:00 AM	13	71	39	24	147	25	62	4	6	97	22	22	8	2	54	8	16	9	3	36	334
07:15 AM	14	71	30	13	128	27	68	7	1	103	43	21	7	0	71	14	28	17	1	60	362
07:30 AM	5	70	28	32	135	20	80	7	6	113	31	34	4	1	70	16	30	33	3	82	400
07:45 AM	9	84	38	28	159	28	98	3	2	131	49	29	3	1	82	12	30	20	7	69	441
Total	41	296	135	97	569	100	308	21	15	444	145	106	22	4	277	50	104	79	14	247	1537
08:00 AM	10	54	26	20	110	10	47	8	2	67	35	18	1	0	54	12	40	23	7	82	313
08:15 AM	11	40	28	22	101	20	63	8	4	95	27	36	11	1	75	16	27	12	6	61	332
08:30 AM	8	35	16	17	76	18	65	5	3	91	21	26	5	0	52	11	24	15	6	56	275
12:00 AM	13	47	22	11	93	16	65	7	4	92	26	25	6	1	58	16	36	13	3	68	311
Grand Total	83	472	227	167	949	164	548	49	28	789	254	211	45	6	516	105	231	142	36	514	2768
Apprch %	8.7	49.7	23.9	17.6		20.8	69.5	6.2	3.5		49.2	40.9	8.7	1.2		20.4	44.9	27.6	7		
Total %	3	17.1	8.2	6	34.3	5.9	19.8	1.8	1	28.5	9.2	7.6	1.6	0.2	18.6	3.8	8.3	5.1	1.3	18.6	
Passenger Vehicles																					
% Passenger Vehicles	84.3	91.3	95.6	97.6	92.8	91.5	94.2	79.6	96.4	92.8	78.3	79.6	88.9	83.3	79.8	84.8	92.2	71.1	69.4	83.3	88.6
Large 2 Axle Vehicles																					
% Large 2 Axle Vehicles	6	3	1.3	0	2.3	3	3.1	10.2	3.6	3.5	5.1	5.2	8.9	0	5.4	7.6	3	9.9	13.9	6.6	4
3 Axle Vehicles																					
% 3 Axle Vehicles	1.2	2.5	0.4	0.6	1.6	1.2	1.1	0	0	1	4.3	6.6	0	0	4.8	1	3	5.6	11.1	3.9	2.5
4+ Axle Trucks	7	15	6	3	31	7	9	5	0	21	31	18	1	1	51	7	4	19	2	32	135
% 4+ Axle Trucks																					

	Etiwanda Avenue Southbound					Arrow Highway Westbound					Etiwanda Avenue Northbound					Arrow Highway Eastbound					
Start Time	Left	Thru	Right	RoR	App. Total	Left	Thru	Right	RoR	App. Total	Left	Thru	Right	RoR	App. Total	Left	Thru	Right	RoR	App. Total	Int. Total
Peak Hour Analysis From 07:00 AM to 0 - Peak 1 of 1																					
Peak Hour for Entire Intersection Begins at 07:00 AM																					
07:00 AM	13	71	**39**	24	147	25	62	4	**6**	97	22	22	**8**	**2**	54	8	16	9	3	36	334
07:15 AM	**14**	71	30	13	128	27	68	7	1	103	43	21	7	0	71	14	28	17	1	60	362
07:30 AM	5	70	28	**32**	135	20	80	7	6	113	31	**34**	4	1	70	**16**	**30**	**33**	3	**82**	400
07:45 AM	9	**84**	38	28	**159**	28	**98**	3	2	**131**	**49**	29	3	1	**82**	12	30	20	**7**	69	**441**
Total Volume	41	296	135	97	569	100	308	21	15	444	145	106	22	4	277	50	104	79	14	247	1537
% App. Total	7.2	52	23.7	17		22.5	69.4	4.7	3.4		52.3	38.3	7.9	1.4		20.2	42.1	32	5.7		
PHF	.732	.881	.865	.758	.895	.893	.786	.750	.625	.847	.740	.779	.688	.500	.845	.781	.867	.598	.500	.753	.871

Counts Unlimited Inc.
25286 Jaclyn Avenue
Moreno Valley, CA 92557
951-485-7934

City of Rancho Cucamonga
N/S: Etiwanda Avenue
E/W: Arrow Highway
Weather: Sunny

File Name : RNCETARAM
Site Code : 9150097
Start Date : 6/2/2009
Page No : 2

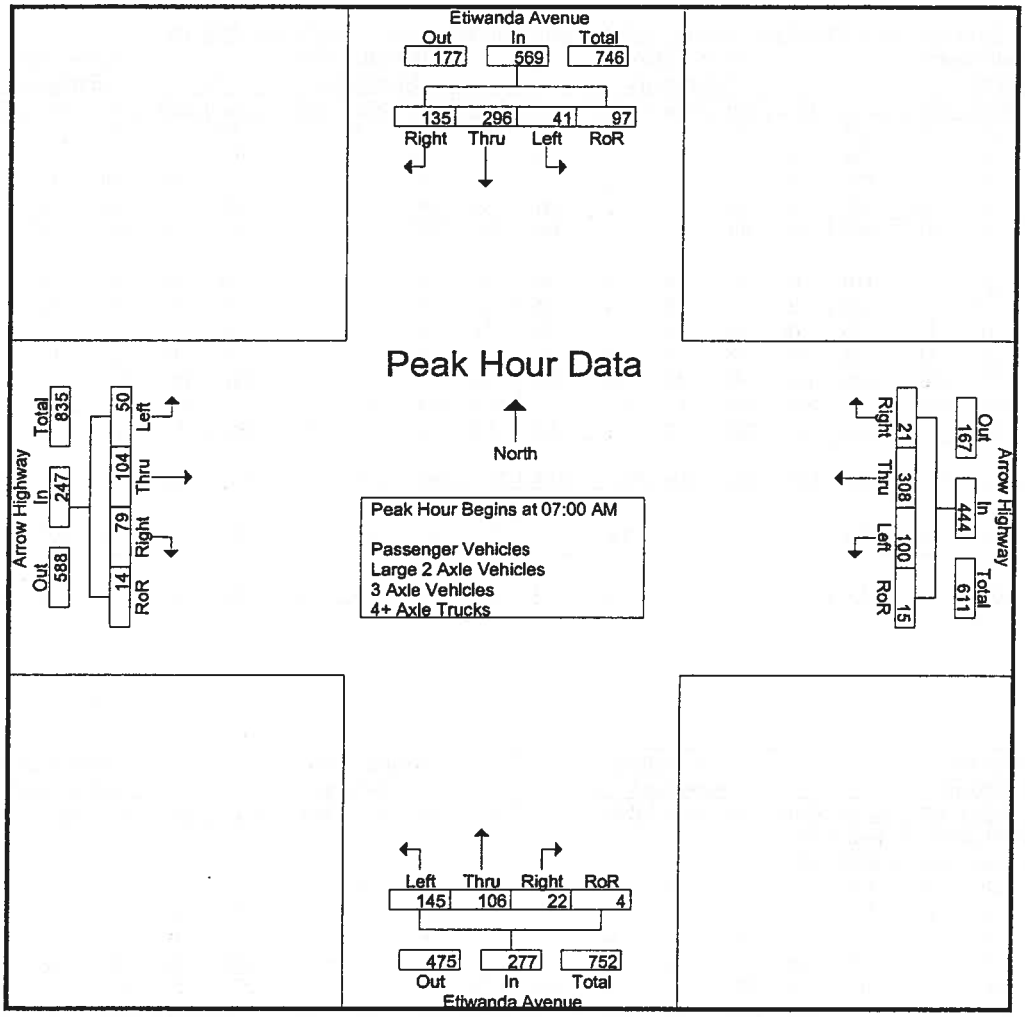

Peak Hour Analysis From 07:00 AM to 0 - Peak 1 of 1

Peak Hour for Each Approach Begins at:

	07:00 AM					07:00 AM					07:30 AM					07:30 AM				
+0 mins.	13	71	**39**	24	147	25	62	4	**6**	97	31	34	4	**1**	70	**16**	30	**33**	3	**82**
+15 mins.	**14**	71	30	13	128	27	68	7	1	103	**49**	29	3	1	**82**	12	30	20	**7**	69
+30 mins.	5	70	28	**32**	135	20	80	7	6	113	35	18	1	0	54	12	**40**	23	7	82
+45 mins.	9	**84**	38	28	**159**	**28**	**98**	3	2	**131**	27	**36**	**11**	1	75	16	27	12	6	61
Total Volume	41	296	135	97	569	100	308	21	15	444	142	117	19	3	281	56	127	88	23	294
% App. Total	7.2	52	23.7	17		22.5	69.4	4.7	3.4		50.5	41.6	6.8	1.1		19	43.2	29.9	7.8	
PHF	.732	.881	.865	.758	.895	.893	.786	.750	.625	.847	.724	.813	.432	.750	.857	.875	.794	.667	.821	.896

Counts Unlimited Inc.
25286 Jaclyn Avenue
Moreno Valley, CA 92557
951-485-7934

City of Rancho Cucamonga
N/S: Etiwanda Avenue
E/W: Arrow Highway
Weather: Sunny

File Name : RNCETARAM
Site Code : 9150097
Start Date : 6/2/2009
Page No : 1

Groups Printed- Passenger Vehicles

	Etiwanda Avenue Southbound					Arrow Highway Westbound					Etiwanda Avenue Northbound					Arrow Highway Eastbound					
Start Time	Left	Thru	Right	RoR	App. Total	Left	Thru	Right	RoR	App. Total	Left	Thru	Right	RoR	App. Total	Left	Thru	Right	RoR	App. Total	Int. Total
07:00 AM	13	65	36	23	137	23	54	3	6	86	17	14	8	2	41	7	14	8	1	30	294
07:15 AM	12	67	29	13	121	24	65	4	1	94	34	19	5	0	58	9	28	10	1	48	321
07:30 AM	5	69	28	30	132	20	77	7	6	110	27	26	3	1	57	15	28	28	3	74	373
07:45 AM	7	81	38	28	154	27	93	3	1	124	42	26	3	0	71	11	29	16	6	62	411
Total	37	282	131	94	544	94	289	17	14	414	120	85	19	3	227	42	99	62	11	214	1399
08:00 AM	7	46	24	20	97	9	45	4	2	60	22	14	1	0	37	12	38	14	4	68	262
08:15 AM	10	33	27	22	92	18	60	7	4	89	23	29	11	1	64	13	19	6	5	43	288
08:30 AM	7	30	16	16	69	16	61	4	3	84	15	19	5	0	39	9	21	10	2	42	234
08:45 AM	9	40	19	11	79	13	61	7	4	85	19	21	4	1	45	13	36	9	3	61	270
Total	33	149	86	69	337	56	227	22	13	318	79	83	21	2	185	47	114	39	14	214	1054
Grand Total	70	431	217	163	881	150	516	39	27	732	199	168	40	5	412	89	213	101	25	428	2453
Apprch %	7.9	48.9	24.6	18.5		20.5	70.5	5.3	3.7		48.3	40.8	9.7	1.2		20.8	49.8	23.6	5.8		
Total %	2.9	17.6	8.8	6.6	35.9	6.1	21	1.6	1.1	29.8	8.1	6.8	1.6	0.2	16.8	3.6	8.7	4.1	1	17.4	

	Etiwanda Avenue Southbound					Arrow Highway Westbound					Etiwanda Avenue Northbound					Arrow Highway Eastbound					
Start Time	Left	Thru	Right	RoR	App. Total		Thru	Right	RoR	App. Total		Thru	Right	RoR	App. Total		Thru	Right	RoR	App. Total	Int. Total
Peak Hour Analysis From 07:00 AM to 07:45 AM - Peak 1 of 1																					
Peak Hour for Entire Intersection Begins at 07:00 AM																					
07:00 AM	**13**	65	36	23	137	23	54	3	**6**	86	17	14	**8**	**2**	41	7	14	8	1	30	294
07:15 AM	12	67	29	13	121	24	65	4	1	94	34	19	5	0	58	9	28	10	1	48	321
07:30 AM	5	69	28	**30**	132	20	77	7	6	110	27	**26**	3	1	57	**15**	28	**28**	3	74	373
07:45 AM	7	**81**	**38**	28	**154**	**27**	**93**	3	1	124	**42**	26	3	0	**71**	11	**29**	16	**6**	62	**411**
Total Volume	37	282	131	94	544	94	289	17	14	414	120	85	19	3	227	42	99	62	11	214	1399
% App. Total	6.8	51.8	24.1	17.3		22.7	69.8	4.1	3.4		52.9	37.4	8.4	1.3		19.6	46.3	29	5.1		
PHF	.712	.870	.862	.783	.883	.870	.777	.607	.583	.835	.714	.817	.594	.375	.799	.700	.853	.554	.458	.723	.851

Counts Unlimited Inc.
25286 Jaclyn Avenue
Moreno Valley, CA 92557
951-485-7934

City of Rancho Cucamonga
N/S: Etiwanda Avenue
E/W: Arrow Highway
Weather: Sunny

File Name : RNCETARAM
Site Code : 9150097
Start Date : 6/2/2009
Page No : 2

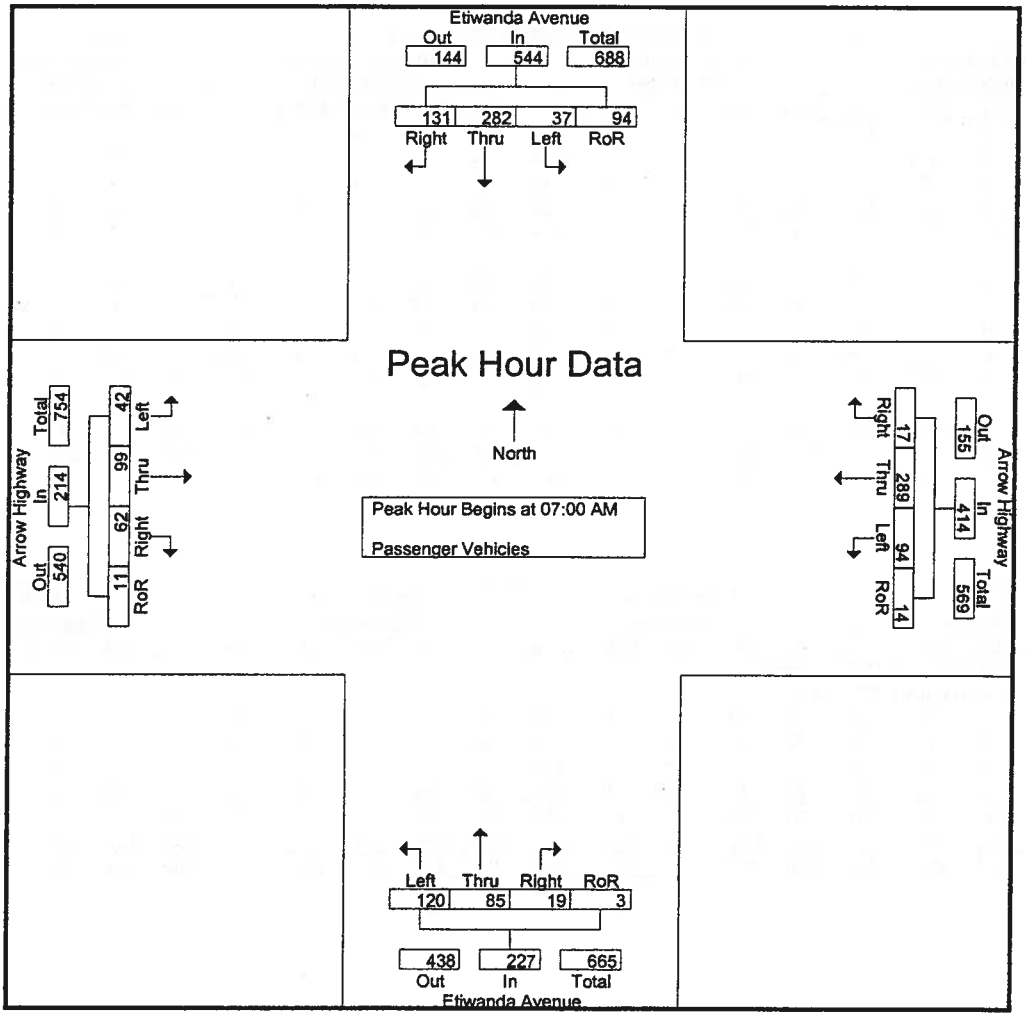

Peak Hour Analysis From 07:00 AM to 07:45 AM - Peak 1 of 1

Peak Hour for Each Approach Begins at:

	07:00 AM					07:00 AM					07:00 AM					07:00 AM				
+0 mins.	**13**	65	36	23	137	23	54	3	**6**	86	17	14	**8**	**2**	41	7	14	8	1	30
+15 mins.	12	67	29	13	121	24	65	4	1	94	34	19	5	0	58	9	28	10	1	48
+30 mins.	5	69	28	**30**	132	20	77	7	6	110	27	**26**	3	1	57	**15**	28	**28**	3	74
+45 mins.	7	**81**	**38**	28	**154**	**27**	**93**	3	1	**124**	**42**	26	3	0	**71**	11	**29**	16	**6**	62
Total Volume	37	282	131	94	544	94	289	17	14	414	120	85	19	3	227	42	99	62	11	214
% App. Total	6.8	51.8	24.1	17.3		22.7	69.8	4.1	3.4		52.9	37.4	8.4	1.3		19.6	46.3	29	5.1	
PHF	.712	.870	.862	.783	.883	.870	.777	.607	.583	.835	.714	.817	.594	.375	.799	.700	.853	.554	.458	.723

Counts Unlimited Inc.
25286 Jaclyn Avenue
Moreno Valley, CA 92557
951-485-7934

City of Rancho Cucamonga
N/S: Etiwanda Avenue
E/W: Arrow Highway
Weather: Sunny

File Name : RNCETARAM
Site Code : 9150097
Start Date : 6/2/2009
Page No : 1

Groups Printed- Large 2 Axle Vehicles

	Etiwanda Avenue Southbound					Arrow Highway Westbound					Etiwanda Avenue Northbound					Arrow Highway Eastbound					
Start Time	Left	Thru	Right	RoR	App. Total	Left	Thru	Right	RoR	App. Total	Left	Thru	Right	RoR	App. Total	Left	Thru	Right	RoR	App. Total	Int. Total
07:00 AM	0	1	2	0	3	0	5	0	0	5	1	4	0	0	5	1	0	1	2	4	17
07:15 AM	0	1	0	0	1	1	2	0	0	3	2	0	2	0	4	4	0	2	0	6	14
07:30 AM	0	0	0	0	0	0	0	0	0	0	1	2	1	0	4	0	1	1	0	2	6
07:45 AM	0	1	0	0	1	1	3	0	1	5	1	1	0	0	2	0	0	0	0	0	8
Total	0	3	2	0	5	2	10	0	1	13	5	7	3	0	15	5	1	4	2	12	45
08:00 AM	2	3	0	0	5	1	1	3	0	5	3	1	0	0	4	0	2	2	1	5	19
08:15 AM	0	2	0	0	2	1	1	1	0	3	2	0	0	0	2	0	2	4	0	6	13
08:30 AM	0	3	0	0	3	0	4	1	0	5	1	1	0	0	2	1	2	2	2	7	17
08:45 AM	3	3	1	0	7	1	1	0	0	2	2	2	1	0	5	2	0	2	0	4	18
Total	5	11	1	0	17	3	7	5	0	15	8	4	1	0	13	3	6	10	3	22	67
Grand Total	5	14	3	0	22	5	17	5	1	28	13	11	4	0	28	8	7	14	5	34	112
Apprch %	22.7	63.6	13.6	0		17.9	60.7	17.9	3.6		46.4	39.3	14.3	0		23.5	20.6	41.2	14.7		
Total %	4.5	12.5	2.7	0	19.6	4.5	15.2	4.5	0.9	25	11.6	9.8	3.6	0	25	7.1	6.2	12.5	4.5	30.4	

	Etiwanda Avenue Southbound					Arrow Highway Westbound					Etiwanda Avenue Northbound					Arrow Highway Eastbound					
Start Time	Left	Thru	Right	RoR	App. Total		Thru	Right	RoR	App. Total		Thru	Right	RoR	App. Total		Thru	Right	RoR	App. Total	Int. Total
Peak Hour Analysis From 07:00 AM to 07:45 AM - Peak 1 of 1																					
Peak Hour for Entire Intersection Begins at 07:00 AM																					
07:00 AM	0	1	2	0	3	0	5	0	0	5	1	4	0	0	5	1	0	1	2	4	17
07:15 AM	0	1	0	0	1	1	2	0	0	3	2	0	2	0	4	4	0	2	0	6	14
07:30 AM	0	0	0	0	0	0	0	0	0	0	1	2	1	0	4	0	1	1	0	2	6
07:45 AM	0	1	0	0	1	1	3	0	1	5	1	1	0	0	2	0	0	0	0	0	8
Total Volume	0	3	2	0	5	2	10	0	1	13	5	7	3	0	15	5	1	4	2	12	45
% App. Total	0	60	40	0		15.4	76.9	0	7.7		33.3	46.7	20	0		41.7	8.3	33.3	16.7		
PHF	.000	.750	.250	.000	.417	.500	.500	.000	.250	.650	.625	.438	.375	.000	.750	.313	.250	.500	.250	.500	.662

Counts Unlimited Inc.
25286 Jaclyn Avenue
Moreno Valley, CA 92557
951-485-7934

City of Rancho Cucamonga
N/S: Etiwanda Avenue
E/W: Arrow Highway
Weather: Sunny

File Name : RNCETARAM
Site Code : 9150097
Start Date : 6/2/2009
Page No : 2

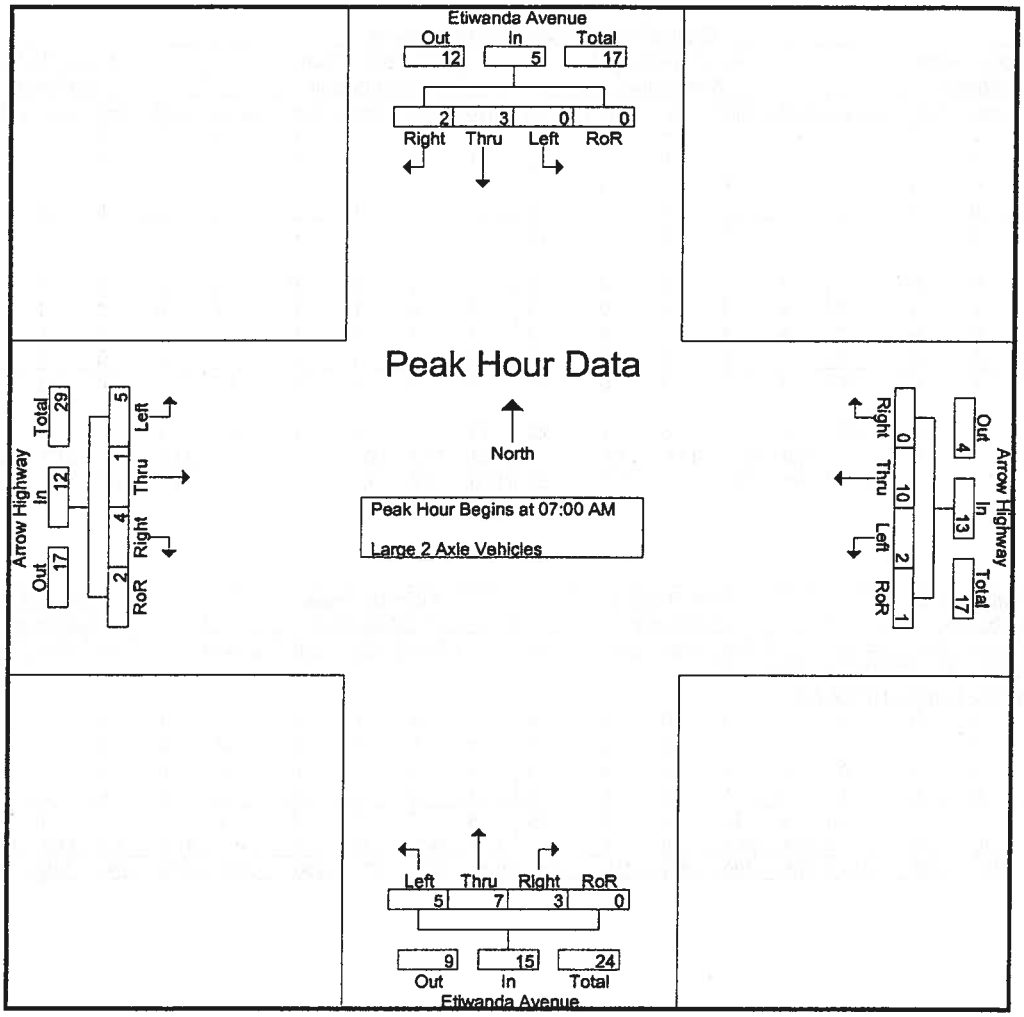

Peak Hour Analysis From 07:00 AM to 07:45 AM - Peak 1 of 1

Peak Hour for Each Approach Begins at:

	07:00 AM					07:00 AM					07:00 AM					07:00 AM				
+0 mins.	0	1	2	0	3	0	5	0	0	5	1	4	0	0	5	1	0	1	2	4
+15 mins.	0	1	0	0	1	1	2	0	0	3	2	0	2	0	4	4	0	2	0	6
+30 mins.	0	0	0	0	0	0	0	0	0	0	1	2	1	0	4	0	1	1	0	2
+45 mins.	0	1	0	0	1	1	3	0	1	5	1	1	0	0	2	0	0	0	0	0
Total Volume	0	3	2	0	5	2	10	0	1	13	5	7	3	0	15	5	1	4	2	12
% App. Total	0	60	40	0		15.4	76.9	0	7.7		33.3	46.7	20	0		41.7	8.3	33.3	16.7	
PHF	.000	.750	.250	.000	.417	.500	.500	.000	.250	.650	.625	.438	.375	.000	.750	.313	.250	.500	.250	.500

Counts Unlimited Inc.
25286 Jaclyn Avenue
Moreno Valley, CA 92557
951-485-7934

City of Rancho Cucamonga
N/S: Etiwanda Avenue
E/W: Arrow Highway
Weather: Sunny

File Name : RNCETARAM
Site Code : 9150097
Start Date : 6/2/2009
Page No : 1

Groups Printed- 3 Axle Vehicles

	Etiwanda Avenue Southbound					Arrow Highway Westbound					Etiwanda Avenue Northbound					Arrow Highway Eastbound					
Start Time	Left	Thru	Right	RoR	App. Total	Left	Thru	Right	RoR	App. Total	Left	Thru	Right	RoR	App. Total	Left	Thru	Right	RoR	App. Total	Int. Total
07:00 AM	0	2	0	0	2	1	0	0	0	1	3	2	0	0	5	0	2	0	0	2	10
07:15 AM	0	2	0	0	2	0	1	0	0	1	2	0	0	0	2	0	0	0	0	0	5
07:30 AM	0	1	0	0	1	0	1	0	0	1	1	4	0	0	5	0	0	1	0	1	8
07:45 AM	0	1	0	0	1	0	0	0	0	0	1	1	0	0	2	0	0	2	1	3	6
Total	0	6	0	0	6	1	2	0	0	3	7	7	0	0	14	0	2	3	1	6	29
08:00 AM	0	3	0	0	3	0	0	0	0	0	0	1	0	0	1	0	0	2	1	3	7
08:15 AM	0	1	1	0	2	0	1	0	0	1	0	4	0	0	4	0	4	0	1	5	12
08:30 AM	0	0	0	1	1	1	0	0	0	1	1	2	0	0	3	0	1	1	1	3	8
08:45 AM	1	2	0	0	3	0	3	0	0	3	3	0	0	0	3	1	0	2	0	3	12
Total	1	6	1	1	9	1	4	0	0	5	4	7	0	0	11	1	5	5	3	14	39
Grand Total	1	12	1	1	15	2	6	0	0	8	11	14	0	0	25	1	7	8	4	20	68
Apprch %	6.7	80	6.7	6.7		25	75	0	0		44	56	0	0		5	35	40	20		
Total %	1.5	17.6	1.5	1.5	22.1	2.9	8.8	0	0	11.8	16.2	20.6	0	0	36.8	1.5	10.3	11.8	5.9	29.4	

	Etiwanda Avenue Southbound					Arrow Highway Westbound					Etiwanda Avenue Northbound					Arrow Highway Eastbound					
Start Time	Left	Thru	Right	RoR	App. Total		Thru	Right	RoR	App. Total		Thru	Right	RoR	App. Total		Thru	Right	RoR	App. Total	Int. Total
Peak Hour Analysis From 07:00 AM to 07:45 AM - Peak 1 of 1																					
Peak Hour for Entire Intersection Begins at 07:00 AM																					
07:00 AM	0	2	0	0	2	1	0	0	0	1	3	2	0	0	5	0	2	0	0	2	10
07:15 AM	0	2	0	0	2	0	1	0	0	1	2	0	0	0	2	0	0	0	0	0	5
07:30 AM	0	1	0	0	1	0	1	0	0	1	1	4	0	0	5	0	0	1	0	1	8
07:45 AM	0	1	0	0	1	0	0	0	0	0	1	1	0	0	2	0	0	2	1	3	6
Total Volume	0	6	0	0	6	1	2	0	0	3	7	7	0	0	14	0	2	3	1	6	29
% App. Total	0	100	0	0		33.3	66.7	0	0		50	50	0	0		0	33.3	50	16.7		
PHF	.000	.750	.000	.000	.750	.250	.500	.000	.000	.750	.583	.438	.000	.000	.700	.000	.250	.375	.250	.500	.725

Counts Unlimited Inc.
25286 Jaclyn Avenue
Moreno Valley, CA 92557
951-485-7934

City of Rancho Cucamonga
N/S: Etiwanda Avenue
E/W: Arrow Highway
Weather: Sunny

File Name : RNCETARAM
Site Code : 9150097
Start Date : 6/2/2009
Page No : 2

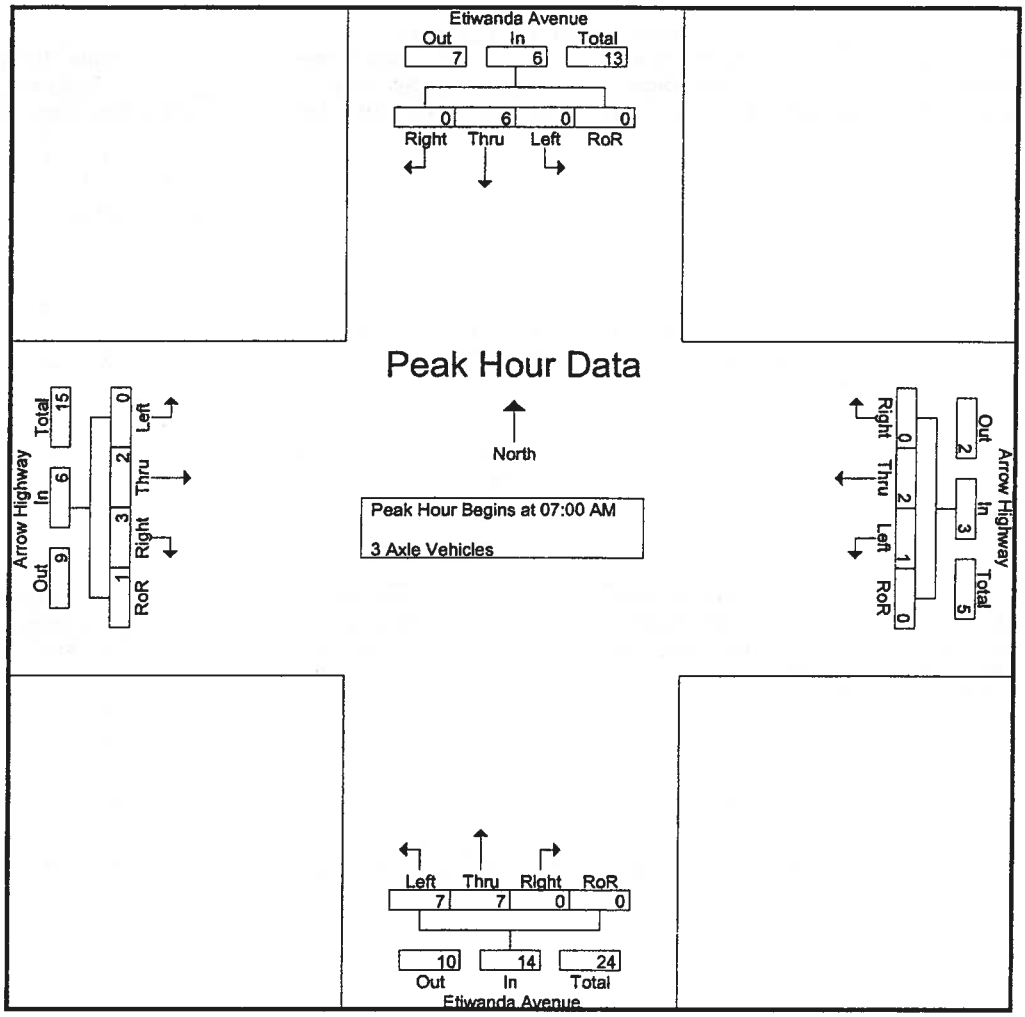

Peak Hour Analysis From 07:00 AM to 07:45 AM - Peak 1 of 1

Peak Hour for Each Approach Begins at:

	07:00 AM					07:00 AM					07:00 AM					07:00 AM				
+0 mins.	0	2	0	0	2	1	0	0	0	1	3	2	0	0	5	0	2	0	0	2
+15 mins.	0	2	0	0	2	0	1	0	0	1	2	0	0	0	2	0	0	0	0	0
+30 mins.	0	1	0	0	1	0	1	0	0	1	1	4	0	0	5	0	0	1	0	1
+45 mins.	0	1	0	0	1	0	0	0	0	0	1	1	0	0	2	0	0	2	1	3
Total Volume	0	6	0	0	6	1	2	0	0	3	7	7	0	0	14	0	2	3	1	6
% App. Total	0	100	0	0		33.3	66.7	0	0		50	50	0	0		0	33.3	50	16.7	
PHF	.000	.750	.000	.000	.750	.250	.500	.000	.000	.750	.583	.438	.000	.000	.700	.000	.250	.375	.250	.500

Counts Unlimited Inc.
25286 Jaclyn Avenue
Moreno Valley, CA 92557
951-485-7934

City of Rancho Cucamonga
N/S: Etiwanda Avenue
E/W: Arrow Highway
Weather: Sunny

File Name : RNCETARAM
Site Code : 9150097
Start Date : 6/2/2009
Page No : 1

Groups Printed- 4+ Axle Trucks

	Etiwanda Avenue Southbound					Arrow Highway Westbound					Etiwanda Avenue Northbound					Arrow Highway Eastbound					
Start Time	Left	Thru	Right	RoR	App. Total	Left	Thru	Right	RoR	App. Total	Left	Thru	Right	RoR	App. Total	Left	Thru	Right	RoR	App. Total	Int. Total
07:00 AM	0	3	1	1	5	1	3	1	0	5	1	2	0	0	3	0	0	0	0	0	13
07:15 AM	2	1	1	0	4	2	0	3	0	5	5	2	0	0	7	1	0	5	0	6	22
07:30 AM	0	0	0	2	2	0	2	0	0	2	2	2	0	0	4	1	1	3	0	5	13
07:45 AM	2	1	0	0	3	0	2	0	0	2	5	1	0	1	7	1	1	2	0	4	16
Total	4	5	2	3	14	3	7	4	0	14	13	7	0	1	21	3	2	10	0	15	64
08:00 AM	1	2	2	0	5	0	1	1	0	2	10	2	0	0	12	0	0	5	1	6	25
08:15 AM	1	4	0	0	5	1	1	0	0	2	2	3	0	0	5	3	2	2	0	7	19
08:30 AM	1	2	0	0	3	1	0	0	0	1	4	4	0	0	8	1	0	2	1	4	16
12:00 AM	0	2	2	0	4	2	0	0	0	2	2	2	1	0	5	0	0	0	0	0	11
Grand Total	7	15	6	3	31	7	9	5	0	21	31	18	1	1	51	7	4	19	2	32	135
Apprch %	22.6	48.4	19.4	9.7		33.3	42.9	23.8	0		60.8	35.3	2	2		21.9	12.5	59.4	6.2		
Total %	5.2	11.1	4.4	2.2	23	5.2	6.7	3.7	0	15.6	23	13.3	0.7	0.7	37.8	5.2	3	14.1	1.5	23.7	

	Etiwanda Avenue Southbound					Arrow Highway Westbound					Etiwanda Avenue Northbound					Arrow Highway Eastbound					
Start Time	Left	Thru	Right	RoR	App. Total		Thru	Right	RoR	App. Total		Thru	Right	RoR	App. Total		Thru	Right	RoR	App. Total	Int. Total
Peak Hour Analysis From 07:00 AM to 07:45 AM - Peak 1 of 1																					
Peak Hour for Entire Intersection Begins at 07:00 AM																					
07:00 AM	0	3	1	1	5	1	3	1	0	5	1	2	0	0	3	0	0	0	0	0	13
07:15 AM	2	1	1	0	4	2	0	3	0	5	5	2	0	0	7	1	0	5	0	6	22
07:30 AM	0	0	0	2	2	0	2	0	0	2	2	2	0	0	4	1	1	3	0	5	13
07:45 AM	2	1	0	0	3	0	2	0	0	2	5	1	0	1	7	1	1	2	0	4	16
Total Volume	4	5	2	3	14	3	7	4	0	14	13	7	0	1	21	3	2	10	0	15	64
% App. Total	28.6	35.7	14.3	21.4		21.4	50	28.6	0		61.9	33.3	0	4.8		20	13.3	66.7	0		
PHF	.500	.417	.500	.375	.700	.375	.583	.333	.000	.700	.650	.875	.000	.250	.750	.750	.500	.500	.000	.625	.727

Counts Unlimited Inc.
25286 Jaclyn Avenue
Moreno Valley, CA 92557
951-485-7934

City of Rancho Cucamonga
N/S: Etiwanda Avenue
E/W: Arrow Highway
Weather: Sunny

File Name : RNCETARAM
Site Code : 9150097
Start Date : 6/2/2009
Page No : 2

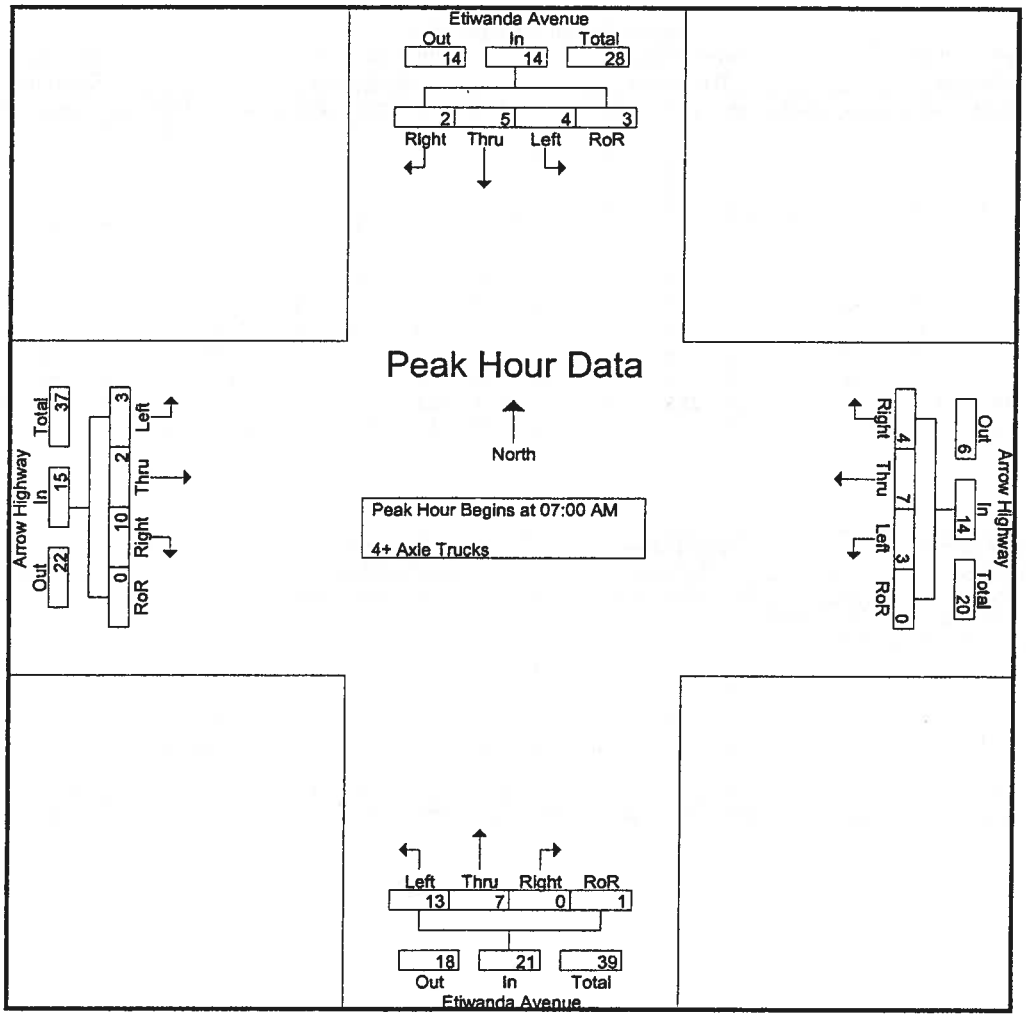

Peak Hour Analysis From 07:00 AM to 07:45 AM - Peak 1 of 1

Peak Hour for Each Approach Begins at:

	07:00 AM					07:00 AM					07:00 AM					07:00 AM				
+0 mins.	0	3	1	1	5	1	3	1	0	5	1	2	0	0	3	0	0	0	0	0
+15 mins.	2	1	1	0	4	2	0	3	0	5	5	2	0	0	7	1	0	5	0	6
+30 mins.	0	0	0	2	2	0	2	0	0	2	2	2	0	0	4	1	1	3	0	5
+45 mins.	2	1	0	0	3	0	2	0	0	2	5	1	0	1	7	1	1	2	0	4
Total Volume	4	5	2	3	14	3	7	4	0	14	13	7	0	1	21	3	2	10	0	15
% App. Total	28.6	35.7	14.3	21.4		21.4	50	28.6	0		61.9	33.3	0	4.8		20	13.3	66.7	0	
PHF	.500	.417	.500	.375	.700	.375	.583	.333	.000	.700	.650	.875	.000	.250	.750	.750	.500	.500	.000	.625

Counts Unlimited Inc.
25286 Jaclyn Avenue
Moreno Valley, CA 92557
951-485-7934

City of Rancho Cucamonga
N/S: Etiwanda Avenue
E/W: Arrow Highway
Weather: Sunny

File Name : RNCETARPM
Site Code : 9150097
Start Date : 6/2/2009
Page No : 1

Groups Printed- Passenger Vehicles - Large 2 Axle Vehicles - 3 Axle Vehicles - 4+ Axle Trucks

	Etiwanda Avenue Southbound					Arrow Highway Westbound					Etiwanda Avenue Northbound					Arrow Highway Eastbound					
Start Time	Left	Thru	Right	RoR	App. Total	Left	Thru	Right	RoR	App. Total	Left	Thru	Right	RoR	App. Total	Left	Thru	Right	RoR	App. Total	Int. Total
04:00 PM	12	45	10	13	80	23	48	18	5	94	31	73	17	0	121	44	103	22	10	179	474
04:15 PM	16	39	14	10	79	16	51	8	5	80	35	76	13	2	126	41	80	28	9	158	443
04:30 PM	16	41	22	5	84	11	33	7	5	56	21	92	13	0	126	64	104	41	21	230	496
04:45 PM	18	45	14	11	88	21	52	17	8	98	29	100	18	1	148	44	96	27	11	178	512
Total	62	170	60	39	331	71	184	50	23	328	116	341	61	3	521	193	383	118	51	745	1925
05:00 PM	10	40	17	15	82	14	57	24	7	102	38	108	17	0	163	61	104	41	17	223	570
05:15 PM	13	39	12	6	70	19	50	25	4	98	37	150	22	0	209	57	108	26	13	204	581
05:30 PM	14	44	6	11	75	17	46	17	4	84	31	115	17	1	164	57	91	23	8	179	502
05:45 PM	20	33	16	7	76	18	38	11	8	75	31	127	17	2	177	47	77	20	8	152	480
Total	57	156	51	39	303	68	191	77	23	359	137	500	73	3	713	222	380	110	46	758	2133
Grand Total	119	326	111	78	634	139	375	127	46	687	253	841	134	6	1234	415	763	228	97	1503	4058
Apprch %	18.8	51.4	17.5	12.3		20.2	54.6	18.5	6.7		20.5	68.2	10.9	0.5		27.6	50.8	15.2	6.5		
Total %	2.9	8	2.7	1.9	15.6	3.4	9.2	3.1	1.1	16.9	6.2	20.7	3.3	0.1	30.4	10.2	18.8	5.6	2.4	37	
Passenger Vehicles																					
% Passenger Vehicles	90.8	89.3	93.7	98.7	91.5	97.1	97.1	97.6	95.7	97.1	90.9	97.5	97	100	96.1	97.3	98.4	82.5	91.8	95.3	95.2
Large 2 Axle Vehicles																					
% Large 2 Axle Vehicles	5	1.8	3.6	0	2.5	1.4	0.8	0.8	2.2	1	5.1	0.6	3	0	1.8	1.7	1.2	2.2	0	1.4	1.6
3 Axle Vehicles	2	17	1	1	21	0	2	1	0	3	2	7	0	0	9	3	3	22	4	32	65
% 3 Axle Vehicles	1.7	5.2	0.9	1.3	3.3	0	0.5	0.8	0	0.4	0.8	0.8	0	0	0.7	0.7	0.4	9.6	4.1	2.1	1.6
4+ Axle Trucks	3	12	2	0	17	2	6	1	1	10	8	9	0	0	17	1	0	13	4	18	62
% 4+ Axle Trucks																					

	Etiwanda Avenue Southbound					Arrow Highway Westbound					Etiwanda Avenue Northbound					Arrow Highway Eastbound					
Start Time	Left	Thru	Right	RoR	App. Total	Left	Thru	Right	RoR	App. Total	Left	Thru	Right	RoR	App. Total	Left	Thru	Right	RoR	App. Total	Int. Total
Peak Hour Analysis From 04:00 PM to 05:45 PM - Peak 1 of 1																					
Peak Hour for Entire Intersection Begins at 04:45 PM																					
04:45 PM	**18**	**45**	14	11	**88**	**21**	52	17	**8**	98	29	100	18	**1**	148	44	96	27	11	178	512
05:00 PM	10	40	**17**	**15**	82	14	57	24	7	**102**	**38**	108	17	0	163	**61**	104	**41**	**17**	**223**	570
05:15 PM	13	39	12	6	70	19	50	**25**	4	98	37	**150**	**22**	0	**209**	57	**108**	26	13	204	**581**
05:30 PM	14	44	6	11	75	17	46	17	4	84	31	115	17	1	164	57	91	23	8	179	502
Total Volume	55	168	49	43	315	71	205	83	23	382	135	473	74	2	684	219	399	117	49	784	2165
% App. Total	17.5	53.3	15.6	13.7		18.6	53.7	21.7	6		19.7	69.2	10.8	0.3		27.9	50.9	14.9	6.2		
PHF	.764	.933	.721	.717	.895	.845	.899	.830	.719	.936	.888	.788	.841	.500	.818	.898	.924	.713	.721	.879	.932

Counts Unlimited Inc.
25286 Jaclyn Avenue
Moreno Valley, CA 92557
951-485-7934

City of Rancho Cucamonga
N/S: Etiwanda Avenue
E/W: Arrow Highway
Weather: Sunny

File Name : RNCETARPM
Site Code : 9150097
Start Date : 6/2/2009
Page No : 2

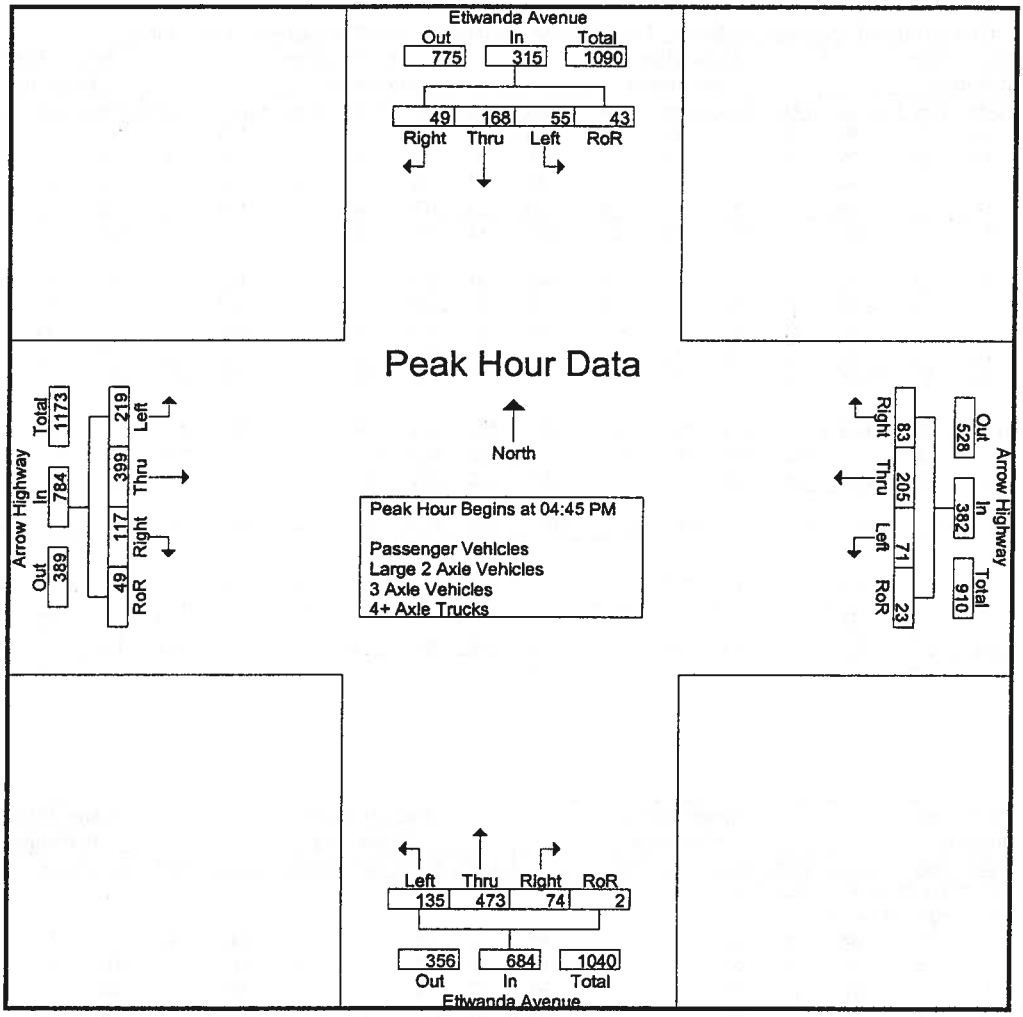

Peak Hour Analysis From 04:00 PM to 05:45 PM - Peak 1 of 1

Peak Hour for Each Approach Begins at:

	04:15 PM					04:45 PM					05:00 PM					04:30 PM				
+0 mins.	16	39	14	10	79	**21**	52	17	**8**	98	**38**	108	17	0	163	**64**	104	**41**	**21**	**230**
+15 mins.	16	41	**22**	5	84	14	**57**	24	7	**102**	37	**150**	**22**	0	**209**	44	96	27	11	178
+30 mins.	**18**	**45**	14	11	**88**	19	50	**25**	4	98	31	115	17	1	164	61	104	41	17	223
+45 mins.	10	40	17	**15**	82	17	46	17	4	84	31	127	17	**2**	177	57	**108**	26	13	204
Total Volume	60	165	67	41	333	71	205	83	23	382	137	500	73	3	713	226	412	135	62	835
% App. Total	18	49.5	20.1	12.3		18.6	53.7	21.7	6		19.2	70.1	10.2	0.4		27.1	49.3	16.2	7.4	
PHF	.833	.917	.761	.683	.946	.845	.899	.830	.719	.936	.901	.833	.830	.375	.853	.883	.954	.823	.738	.908

Counts Unlimited Inc.
25286 Jaclyn Avenue
Moreno Valley, CA 92557
951-485-7934

City of Rancho Cucamonga
N/S: Etiwanda Avenue
E/W: Arrow Highway
Weather: Sunny

File Name : RNCETARPM
Site Code : 9150097
Start Date : 6/2/2009
Page No : 1

Groups Printed- Passenger Vehicles

	Etiwanda Avenue Southbound					Arrow Highway Westbound					Etiwanda Avenue Northbound					Arrow Highway Eastbound					
Start Time	Left	Thru	Right	RoR	App. Total	Left	Thru	Right	RoR	App. Total	Left	Thru	Right	RoR	App. Total	Left	Thru	Right	RoR	App. Total	Int. Total
04:00 PM	9	38	8	12	67	21	45	18	5	89	25	71	16	0	112	39	103	19	9	170	438
04:15 PM	13	31	13	10	67	16	50	8	5	79	30	74	13	2	119	39	78	25	7	149	414
04:30 PM	15	33	21	5	74	11	33	7	4	55	19	87	13	0	119	63	102	27	20	212	460
04:45 PM	17	44	14	11	86	20	51	17	7	95	28	98	18	1	145	44	96	21	11	172	498
Total	54	146	56	38	294	68	179	50	21	318	102	330	60	3	495	185	379	92	47	703	1810
05:00 PM	9	36	16	15	76	14	56	24	7	101	34	102	16	0	152	60	103	37	17	217	546
05:15 PM	13	35	11	6	65	19	46	23	4	92	35	148	21	0	204	55	106	24	11	196	557
05:30 PM	13	42	6	11	72	17	45	17	4	83	28	113	16	1	158	57	88	20	7	172	485
05:45 PM	19	32	15	7	73	17	38	10	8	73	31	127	17	2	177	47	75	15	7	144	467
Total	54	145	48	39	286	67	185	74	23	349	128	490	70	3	691	219	372	96	42	729	2055
Grand Total	108	291	104	77	580	135	364	124	44	667	230	820	130	6	1186	404	751	188	89	1432	3865
Apprch %	18.6	50.2	17.9	13.3		20.2	54.6	18.6	6.6		19.4	69.1	11	0.5		28.2	52.4	13.1	6.2		
Total %	2.8	7.5	2.7	2	15	3.5	9.4	3.2	1.1	17.3	6	21.2	3.4	0.2	30.7	10.5	19.4	4.9	2.3	37.1	

	Etiwanda Avenue Southbound					Arrow Highway Westbound					Etiwanda Avenue Northbound					Arrow Highway Eastbound					
Start Time	Left	Thru	Right	RoR	App. Total		Thru	Right	RoR	App. Total		Thru	Right	RoR	App. Total		Thru	Right	RoR	App. Total	Int. Total
Peak Hour Analysis From 04:45 PM to 05:30 PM - Peak 1 of 1																					
Peak Hour for Entire Intersection Begins at 04:45 PM																					
04:45 PM	**17**	**44**	14	11	**86**	**20**	51	17	7	95	28	98	18	1	145	44	96	21	11	172	498
05:00 PM	9	36	**16**	**15**	76	14	**56**	**24**	7	**101**	34	102	16	0	152	**60**	103	**37**	**17**	**217**	546
05:15 PM	13	35	11	6	65	19	46	23	4	92	**35**	**148**	**21**	0	**204**	55	**106**	24	11	196	**557**
05:30 PM	13	42	6	11	72	17	45	17	4	83	28	113	16	1	158	57	88	20	7	172	485
Total Volume	52	157	47	43	299	70	198	81	22	371	125	461	71	2	659	216	393	102	46	757	2086
% App. Total	17.4	52.5	15.7	14.4		18.9	53.4	21.8	5.9		19	70	10.8	0.3		28.5	51.9	13.5	6.1		
PHF	.765	.892	.734	.717	.869	.875	.884	.844	.786	.918	.893	.779	.845	.500	.808	.900	.927	.689	.676	.872	.936

Counts Unlimited Inc.
25286 Jaclyn Avenue
Moreno Valley, CA 92557
951-485-7934

City of Rancho Cucamonga
N/S: Etiwanda Avenue
E/W: Arrow Highway
Weather: Sunny

File Name : RNCETARPM
Site Code : 9150097
Start Date : 6/2/2009
Page No : 2

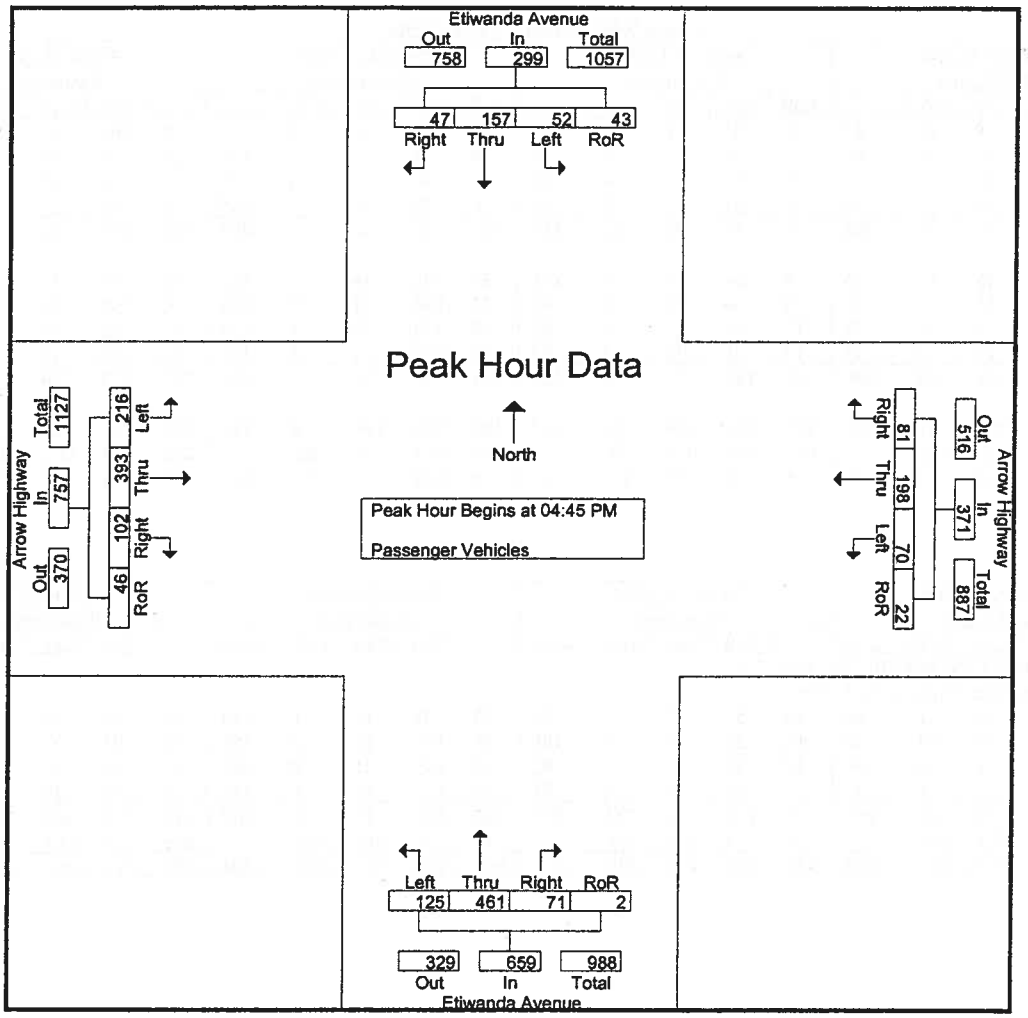

Peak Hour Analysis From 04:45 PM to 05:30 PM - Peak 1 of 1

Peak Hour for Each Approach Begins at:

	04:45 PM					04:45 PM					04:45 PM					04:45 PM				
+0 mins.	**17**	**44**	14	11	**86**	**20**	51	17	7	95	28	98	18	**1**	145	44	96	21	11	172
+15 mins.	9	36	**16**	**15**	76	14	**56**	**24**	7	**101**	34	102	16	**0**	152	**60**	103	**37**	**17**	**217**
+30 mins.	13	35	11	6	65	19	46	23	4	92	**35**	**148**	**21**	0	**204**	55	**106**	24	11	196
+45 mins.	13	42	6	11	72	17	45	17	4	83	28	113	16	1	158	57	88	20	7	172
Total Volume	52	157	47	43	299	70	198	81	22	371	125	461	71	2	659	216	393	102	46	757
% App. Total	17.4	52.5	15.7	14.4		18.9	53.4	21.8	5.9		19	70	10.8	0.3		28.5	51.9	13.5	6.1	
PHF	.765	.892	.734	.717	.869	.875	.884	.844	.786	.918	.893	.779	.845	.500	.808	.900	.927	.689	.676	.872

Counts Unlimited Inc.
25286 Jaclyn Avenue
Moreno Valley, CA 92557
951-485-7934

City of Rancho Cucamonga
N/S: Etiwanda Avenue
E/W: Arrow Highway
Weather: Sunny

File Name : RNCETARPM
Site Code : 9150097
Start Date : 6/2/2009
Page No : 1

Groups Printed- Large 2 Axle Vehicles

	Etiwanda Avenue Southbound					Arrow Highway Westbound					Etiwanda Avenue Northbound					Arrow Highway Eastbound					
Start Time	Left	Thru	Right	RoR	App. Total	Left	Thru	Right	RoR	App. Total	Left	Thru	Right	RoR	App. Total	Left	Thru	Right	RoR	App. Total	Int. Total
04:00 PM	1	1	1	0	3	1	0	0	0	1	3	0	1	0	4	3	0	0	0	3	11
04:15 PM	2	1	0	0	3	0	1	0	0	1	4	0	0	0	4	1	1	0	0	2	10
04:30 PM	1	1	0	0	2	0	0	0	1	1	0	2	0	0	2	1	1	3	0	5	10
04:45 PM	0	0	0	0	0	1	1	0	0	2	1	1	0	0	2	0	0	0	0	0	4
Total	4	3	1	0	8	2	2	0	1	5	8	3	1	0	12	5	2	3	0	10	35
05:00 PM	1	1	1	0	3	0	0	0	0	0	2	1	1	0	4	1	1	1	0	3	10
05:15 PM	0	1	1	0	2	0	0	0	0	0	2	0	1	0	3	1	2	0	0	3	8
05:30 PM	0	1	0	0	1	0	1	0	0	1	1	1	1	0	3	0	2	0	0	2	7
05:45 PM	1	0	1	0	2	0	0	1	0	1	0	0	0	0	0	0	2	1	0	3	6
Total	2	3	3	0	8	0	1	1	0	2	5	2	3	0	10	2	7	2	0	11	31
Grand Total	6	6	4	0	16	2	3	1	1	7	13	5	4	0	22	7	9	5	0	21	66
Apprch %	37.5	37.5	25	0		28.6	42.9	14.3	14.3		59.1	22.7	18.2	0		33.3	42.9	23.8	0		
Total %	9.1	9.1	6.1	0	24.2	3	4.5	1.5	1.5	10.6	19.7	7.6	6.1	0	33.3	10.6	13.6	7.6	0	31.8	

	Etiwanda Avenue Southbound					Arrow Highway Westbound					Etiwanda Avenue Northbound					Arrow Highway Eastbound					
Start Time	Left	Thru	Right	RoR	App. Total		Thru	Right	RoR	App. Total		Thru	Right	RoR	App. Total		Thru	Right	RoR	App. Total	Int. Total
Peak Hour Analysis From 04:45 PM to 05:30 PM - Peak 1 of 1																					
Peak Hour for Entire Intersection Begins at 04:45 PM																					
04:45 PM	0	0	0	0	0	1	1	0	0	2	1	1	0	0	2	0	0	0	0	0	4
05:00 PM	1	1	1	0	3	0	0	0	0	0	2	1	1	0	4	1	1	1	0	3	10
05:15 PM	0	1	1	0	2	0	0	0	0	0	2	0	1	0	3	1	2	0	0	3	8
05:30 PM	0	1	0	0	1	0	1	0	0	1	1	1	1	0	3	0	2	0	0	2	7
Total Volume	1	3	2	0	6	1	2	0	0	3	6	3	3	0	12	2	5	1	0	8	29
% App. Total	16.7	50	33.3	0		33.3	66.7	0	0		50	25	25	0		25	62.5	12.5	0		
PHF	.250	.750	.500	.000	.500	.250	.500	.000	.000	.375	.750	.750	.750	.000	.750	.500	.625	.250	.000	.667	.725

Counts Unlimited Inc.
25286 Jaclyn Avenue
Moreno Valley, CA 92557
951-485-7934

City of Rancho Cucamonga
N/S: Etiwanda Avenue
E/W: Arrow Highway
Weather: Sunny

File Name : RNCETARPM
Site Code : 9150097
Start Date : 6/2/2009
Page No : 2

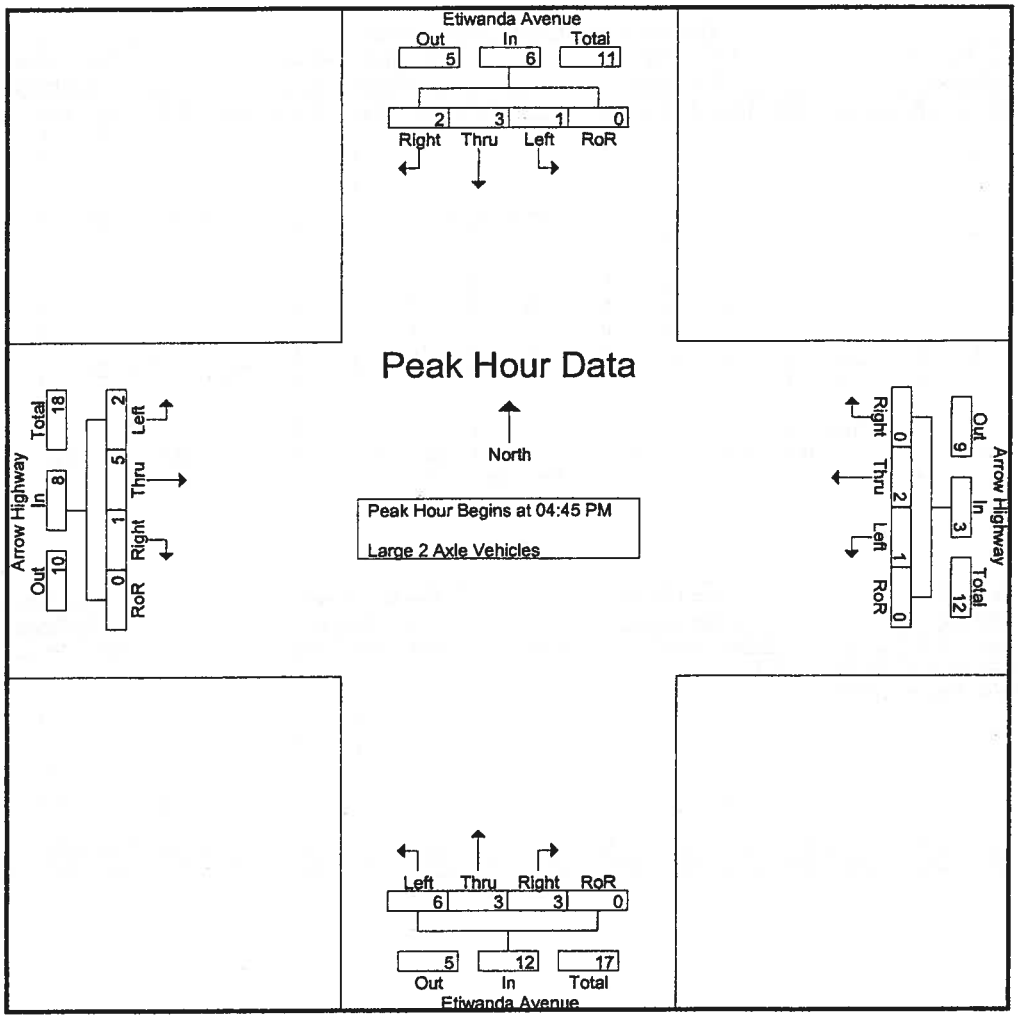

Peak Hour Analysis From 04:45 PM to 05:30 PM - Peak 1 of 1

Peak Hour for Each Approach Begins at:

	04:45 PM					04:45 PM					04:45 PM					04:45 PM				
+0 mins.	0	0	0	0	0	1	1	0	0	2	1	1	0	0	2	0	0	0	0	0
+15 mins.	1	1	1	0	3	0	0	0	0	0	2	1	1	0	4	1	1	1	0	3
+30 mins.	0	1	1	0	2	0	0	0	0	0	2	0	1	0	3	1	2	0	0	3
+45 mins.	0	1	0	0	1	0	1	0	0	1	1	1	1	0	3	0	2	0	0	2
Total Volume	1	3	2	0	6	1	2	0	0	3	6	3	3	0	12	2	5	1	0	8
% App. Total	16.7	50	33.3	0		33.3	66.7	0	0		50	25	25	0		25	62.5	12.5	0	
PHF	.250	.750	.500	.000	.500	.250	.500	.000	.000	.375	.750	.750	.750	.000	.750	.500	.625	.250	.000	.667

Counts Unlimited Inc.
25286 Jaclyn Avenue
Moreno Valley, CA 92557
951-485-7934

City of Rancho Cucamonga
N/S: Etiwanda Avenue
E/W: Arrow Highway
Weather: Sunny

File Name : RNCETARPM
Site Code : 9150097
Start Date : 6/2/2009
Page No : 1

Groups Printed- 3 Axle Vehicles

	Etiwanda Avenue Southbound					Arrow Highway Westbound					Etiwanda Avenue Northbound					Arrow Highway Eastbound					
Start Time	Left	Thru	Right	RoR	App. Total	Left	Thru	Right	RoR	App. Total	Left	Thru	Right	RoR	App. Total	Left	Thru	Right	RoR	App. Total	Int. Total
04:00 PM	0	4	1	1	6	0	1	0	0	1	0	2	0	0	2	2	0	2	1	5	14
04:15 PM	1	4	0	0	5	0	0	0	0	0	0	1	0	0	1	1	1	2	2	6	12
04:30 PM	0	3	0	0	3	0	0	0	0	0	0	1	0	0	1	0	1	9	1	11	15
04:45 PM	1	0	0	0	1	0	0	0	0	0	0	0	0	0	0	0	0	3	0	3	4
Total	2	11	1	1	15	0	1	0	0	1	0	4	0	0	4	3	2	16	4	25	45
05:00 PM	0	2	0	0	2	0	0	0	0	0	1	2	0	0	3	0	0	1	0	1	6
05:15 PM	0	3	0	0	3	0	1	1	0	2	0	0	0	0	0	0	0	1	0	1	6
05:30 PM	0	1	0	0	1	0	0	0	0	0	1	1	0	0	2	0	1	1	0	2	5
05:45 PM	0	0	0	0	0	0	0	0	0	0	0	0	0	0	0	0	0	3	0	3	3
Total	0	6	0	0	6	0	1	1	0	2	2	3	0	0	5	0	1	6	0	7	20
Grand Total	2	17	1	1	21	0	2	1	0	3	2	7	0	0	9	3	3	22	4	32	65
Apprch %	9.5	81	4.8	4.8		0	66.7	33.3	0		22.2	77.8	0	0		9.4	9.4	68.8	12.5		
Total %	3.1	26.2	1.5	1.5	32.3	0	3.1	1.5	0	4.6	3.1	10.8	0	0	13.8	4.6	4.6	33.8	6.2	49.2	

	Etiwanda Avenue Southbound					Arrow Highway Westbound					Etiwanda Avenue Northbound					Arrow Highway Eastbound					
Start Time	Left	Thru	Right	RoR	App. Total		Thru	Right	RoR	App. Total		Thru	Right	RoR	App. Total		Thru	Right	RoR	App. Total	Int. Total
Peak Hour Analysis From 04:45 PM to 05:30 PM - Peak 1 of 1																					
Peak Hour for Entire Intersection Begins at 04:45 PM																					
04:45 PM	1	0	0	0	1	0	0	0	0	0	0	0	0	0	0	0	0	3	0	3	4
05:00 PM	0	2	0	0	2	0	0	0	0	0	1	2	0	0	3	0	0	1	0	1	6
05:15 PM	0	3	0	0	3	0	1	1	0	2	0	0	0	0	0	0	0	1	0	1	6
05:30 PM	0	1	0	0	1	0	0	0	0	0	1	1	0	0	2	0	1	1	0	2	5
Total Volume	1	6	0	0	7	0	1	1	0	2	2	3	0	0	5	0	1	6	0	7	21
% App. Total	14.3	85.7	0	0		0	50	50	0		40	60	0	0		0	14.3	85.7	0		
PHF	.250	.500	.000	.000	.583	.000	.250	.250	.000	.250	.500	.375	.000	.000	.417	.000	.250	.500	.000	.583	.875

Counts Unlimited Inc.
25286 Jaclyn Avenue
Moreno Valley, CA 92557
951-485-7934

City of Rancho Cucamonga
N/S: Etiwanda Avenue
E/W: Arrow Highway
Weather: Sunny

File Name : RNCETARPM
Site Code : 9150097
Start Date : 6/2/2009
Page No : 2

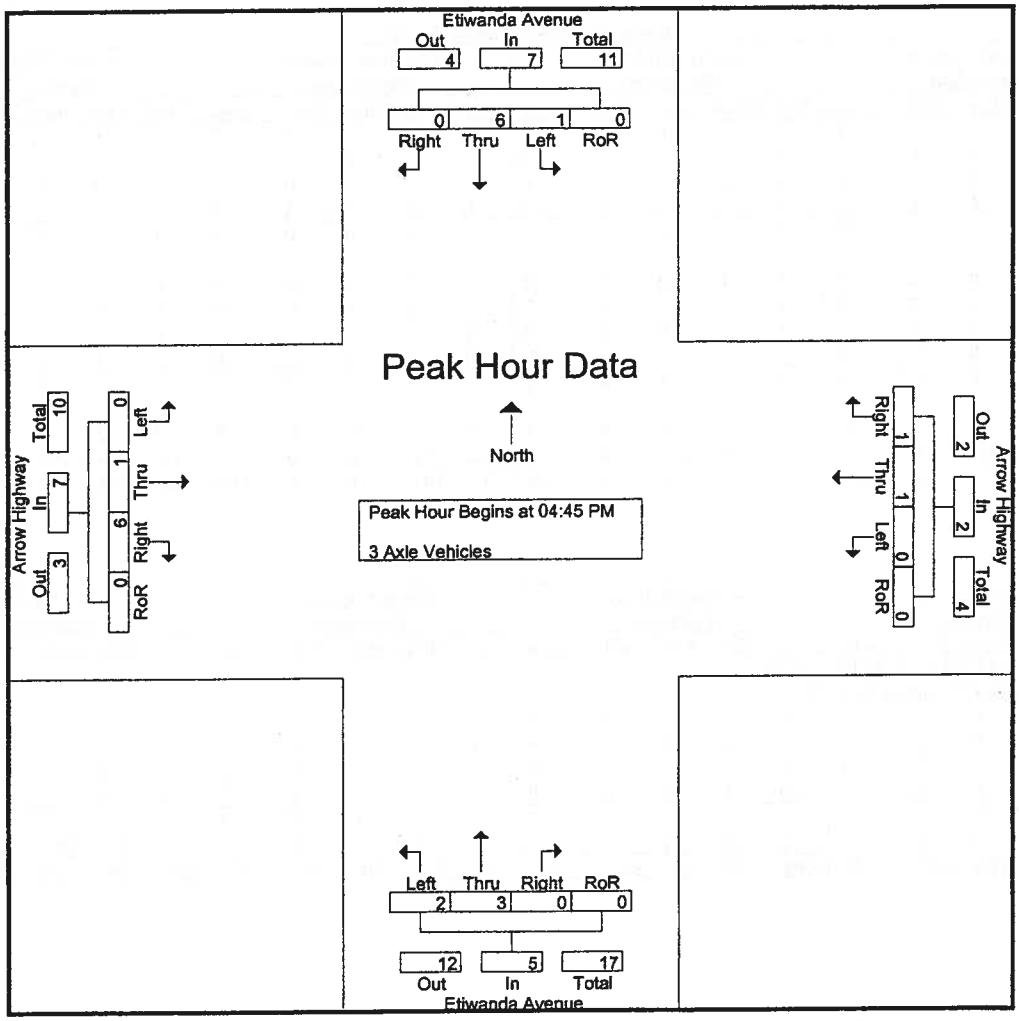

Peak Hour Analysis From 04:45 PM to 05:30 PM - Peak 1 of 1

Peak Hour for Each Approach Begins at:

	04:45 PM					04:45 PM					04:45 PM					04:45 PM				
+0 mins.	1	0	0	0	1	0	0	0	0	0	0	0	0	0	0	0	0	3	0	3
+15 mins.	0	2	0	0	2	0	0	0	0	0	1	2	0	0	3	0	0	1	0	1
+30 mins.	0	3	0	0	3	0	1	1	0	2	0	0	0	0	0	0	0	1	0	1
+45 mins.	0	1	0	0	1	0	0	0	0	0	1	1	0	0	2	0	1	1	0	2
Total Volume	1	6	0	0	7	0	1	1	0	2	2	3	0	0	5	0	1	6	0	7
% App. Total	14.3	85.7	0	0		0	50	50	0		40	60	0	0		0	14.3	85.7	0	
PHF	.250	.500	.000	.000	.583	.000	.250	.250	.000	.250	.500	.375	.000	.000	.417	.000	.250	.500	.000	.583

Counts Unlimited Inc.
25286 Jaclyn Avenue
Moreno Valley, CA 92557
951-485-7934

City of Rancho Cucamonga
N/S: Etiwanda Avenue
E/W: Arrow Highway
Weather: Sunny

File Name : RNCETARPM
Site Code : 9150097
Start Date : 6/2/2009
Page No : 1

Groups Printed- 4+ Axle Trucks

	Etiwanda Avenue Southbound					Arrow Highway Westbound					Etiwanda Avenue Northbound					Arrow Highway Eastbound					
Start Time	Left	Thru	Right	RoR	App. Total	Left	Thru	Right	RoR	App. Total	Left	Thru	Right	RoR	App. Total	Left	Thru	Right	RoR	App. Total	Int. Total
04:00 PM	2	2	0	0	4	1	2	0	0	3	3	0	0	0	3	0	0	1	0	1	11
04:15 PM	0	3	1	0	4	0	0	0	0	0	1	1	0	0	2	0	0	1	0	1	7
04:30 PM	0	4	1	0	5	0	0	0	0	0	2	2	0	0	4	0	0	2	0	2	11
04:45 PM	0	1	0	0	1	0	0	0	1	1	0	1	0	0	1	0	0	3	0	3	6
Total	2	10	2	0	14	1	2	0	1	4	6	4	0	0	10	0	0	7	0	7	35
05:00 PM	0	1	0	0	1	0	1	0	0	1	1	3	0	0	4	0	0	2	0	2	8
05:15 PM	0	0	0	0	0	0	3	1	0	4	0	2	0	0	2	1	0	1	2	4	10
05:30 PM	1	0	0	0	1	0	0	0	0	0	1	0	0	0	1	0	0	2	1	3	5
05:45 PM	0	1	0	0	1	1	0	0	0	1	0	0	0	0	0	0	0	1	1	2	4
Total	1	2	0	0	3	1	4	1	0	6	2	5	0	0	7	1	0	6	4	11	27
Grand Total	3	12	2	0	17	2	6	1	1	10	8	9	0	0	17	1	0	13	4	18	62
Apprch %	17.6	70.6	11.8	0		20	60	10	10		47.1	52.9	0	0		5.6	0	72.2	22.2		
Total %	4.8	19.4	3.2	0	27.4	3.2	9.7	1.6	1.6	16.1	12.9	14.5	0	0	27.4	1.6	0	21	6.5	29	

	Etiwanda Avenue Southbound					Arrow Highway Westbound					Etiwanda Avenue Northbound					Arrow Highway Eastbound					
Start Time	Left	Thru	Right	RoR	App. Total		Thru	Right	RoR	App. Total		Thru	Right	RoR	App. Total		Thru	Right	RoR	App. Total	Int. Total
Peak Hour Analysis From 04:45 PM to 05:30 PM - Peak 1 of 1																					
Peak Hour for Entire Intersection Begins at 04:45 PM																					
04:45 PM	0	1	0	0	1	0	0	0	1	1	0	1	0	0	1	0	0	3	0	3	6
05:00 PM	0	1	0	0	1	0	1	0	0	1	1	3	0	0	4	0	0	2	0	2	8
05:15 PM	0	0	0	0	0	0	3	1	0	4	0	2	0	0	2	1	0	1	2	4	10
05:30 PM	1	0	0	0	1	0	0	0	0	0	1	0	0	0	1	0	0	2	1	3	5
Total Volume	1	2	0	0	3	0	4	1	1	6	2	6	0	0	8	1	0	8	3	12	29
% App. Total	33.3	66.7	0	0		0	66.7	16.7	16.7		25	75	0	0		8.3	0	66.7	25		
PHF	.250	.500	.000	.000	.750	.000	.333	.250	.250	.375	.500	.500	.000	.000	.500	.250	.000	.667	.375	.750	.725

Counts Unlimited Inc.
25286 Jaclyn Avenue
Moreno Valley, CA 92557
951-485-7934

City of Rancho Cucamonga
N/S: Etiwanda Avenue
E/W: Arrow Highway
Weather: Sunny

File Name : RNCETARPM
Site Code : 9150097
Start Date : 6/2/2009
Page No : 2

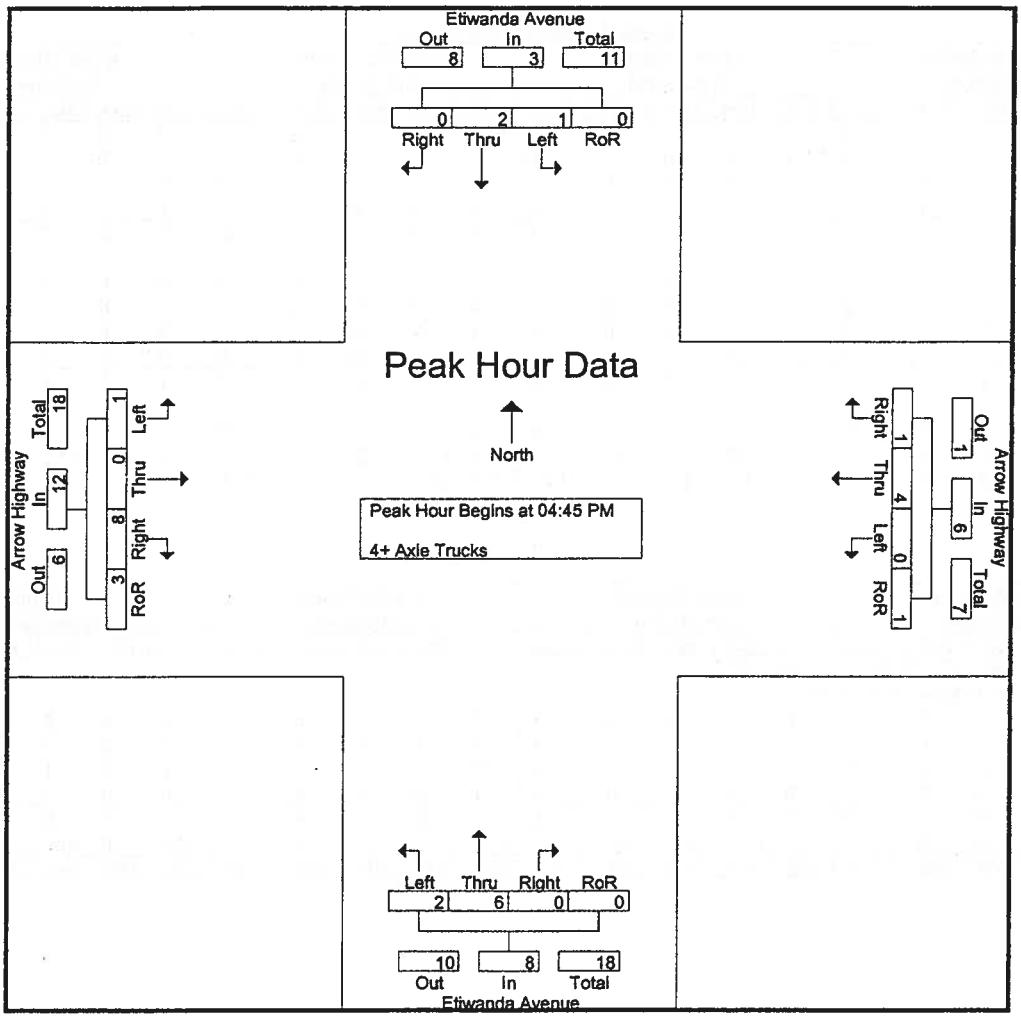

Peak Hour Analysis From 04:45 PM to 05:30 PM - Peak 1 of 1

Peak Hour for Each Approach Begins at:

	04:45 PM					04:45 PM					04:45 PM					04:45 PM				
+0 mins.	0	1	0	0	1	0	0	0	1	1	0	1	0	0	1	0	0	3	0	3
+15 mins.	0	1	0	0	1	0	1	0	0	1	1	3	0	0	4	0	0	2	0	2
+30 mins.	0	0	0	0	0	0	3	1	0	4	0	2	0	0	2	1	0	1	2	4
+45 mins.	1	0	0	0	1	0	0	0	0	0	1	0	0	0	1	0	0	2	1	3
Total Volume	1	2	0	0	3	0	4	1	1	6	2	6	0	0	8	1	0	8	3	12
% App. Total	33.3	66.7	0	0		0	66.7	16.7	16.7		25	75	0	0		8.3	0	66.7	25	
PHF	.250	.500	.000	.000	.750	.000	.333	.250	.250	.375	.500	.500	.000	.000	.500	.250	.000	.667	.375	.750

ATTACHMENT C

FIELD INVENTORY SHEETS

This Page Intentionally Left Blank

URBAN CROSSROADS INTERSECTION GEOMETRY

N/S: Grove Av.
E/W: Foothill Blvd.
JOB#: 6786
ISEC ID: 1

RECEIVED
JUN 11 2009
BY:

DATE:
SURVEYOR:

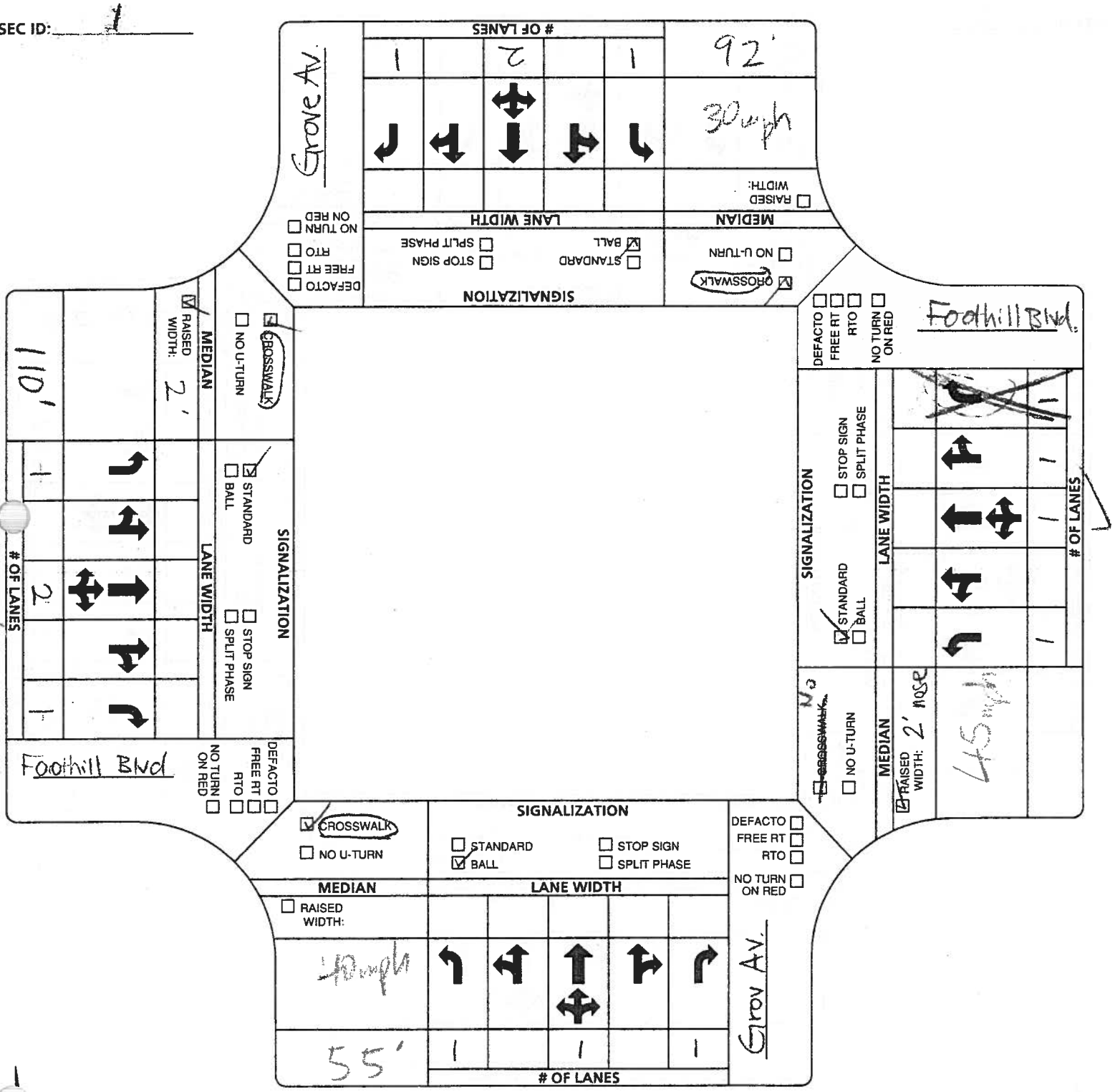

URBAN CROSSROADS INTERSECTION GEOMETRY

N/S: Grove Av.

E/W: Arrow Hwy.

JOB#: 6786

ISEC ID: 2

RECEIVED
JUN 11 2009
BY:

DATE:

SURVEYOR: JA

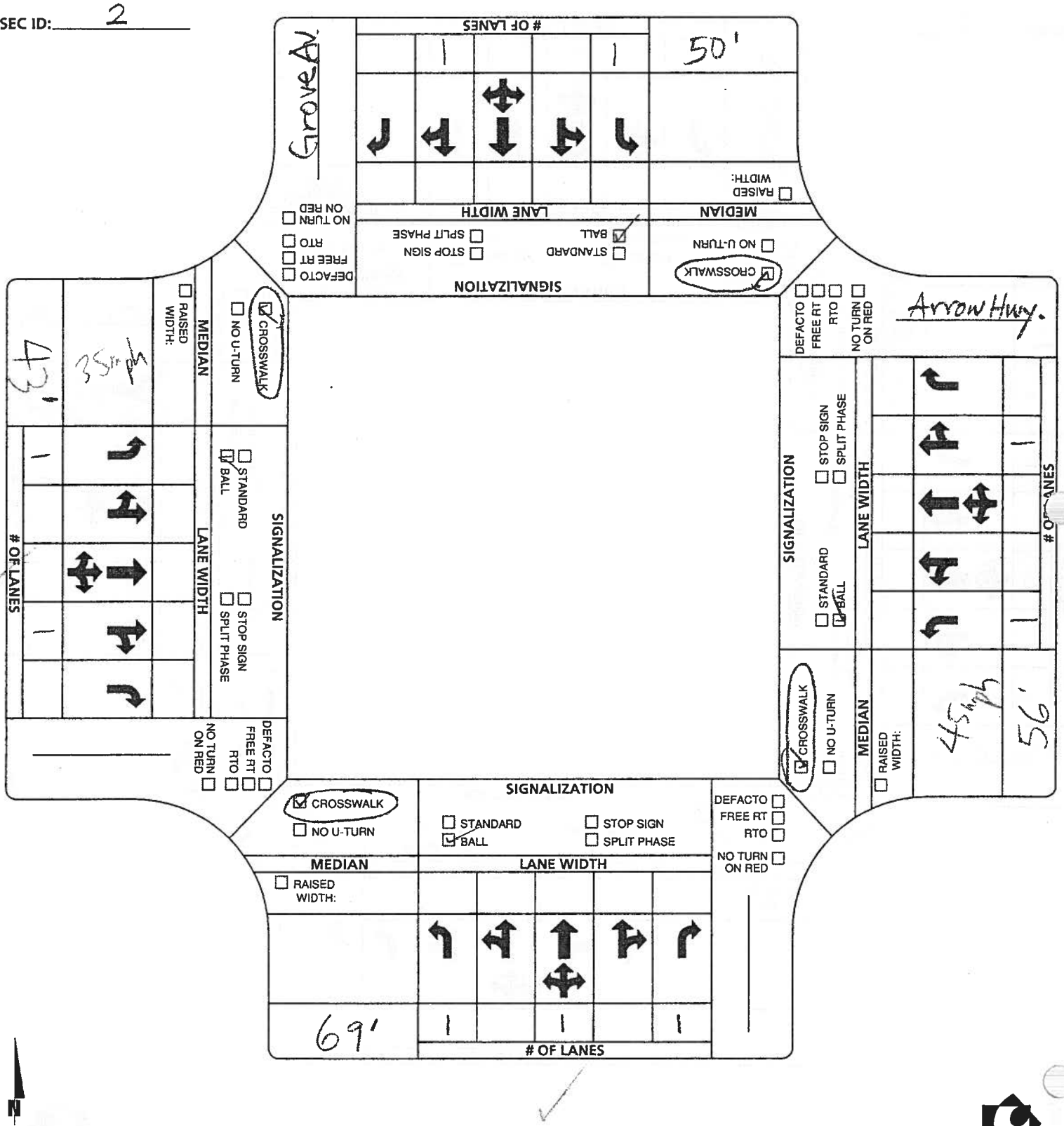

N

URBAN CROSSROADS INTERSECTION GEOMETRY

N/S: Carnelian St.
W/: 19th St. (SR-30)
JOB#: 6786
ISEC ID: 3

RECEIVED
JUN 11 2009
BY:

DATE:
SURVEYOR: JA

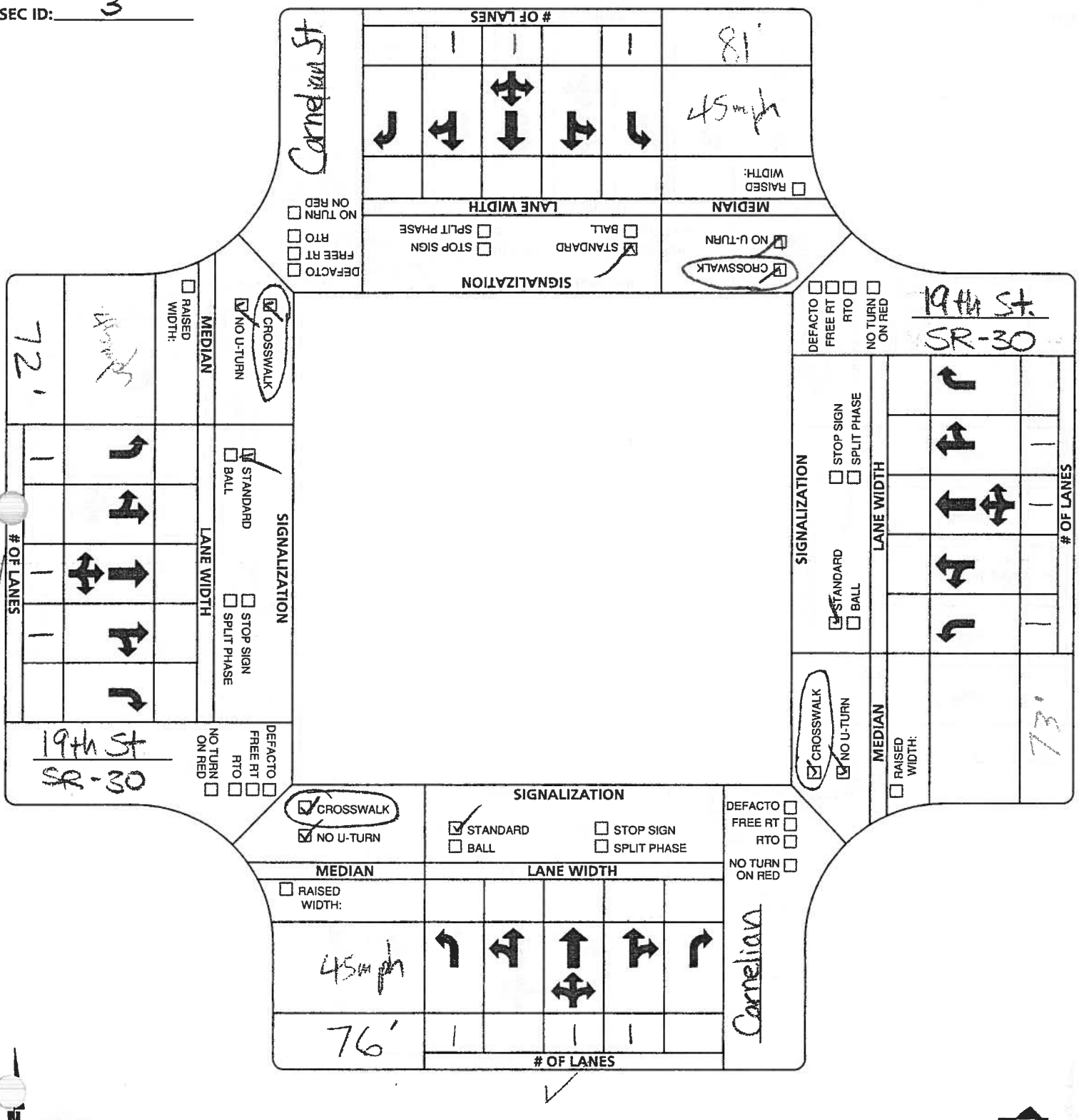

N

URBAN CROSSROADS INTERSECTION GEOMETRY

N/S: Carnelian St.

E/W: Baseline Rd.

JOB#: 6786

ISEC ID: 4

RECEIVED
JUN 11 2009
BY:

DATE:

SURVEYOR: JH

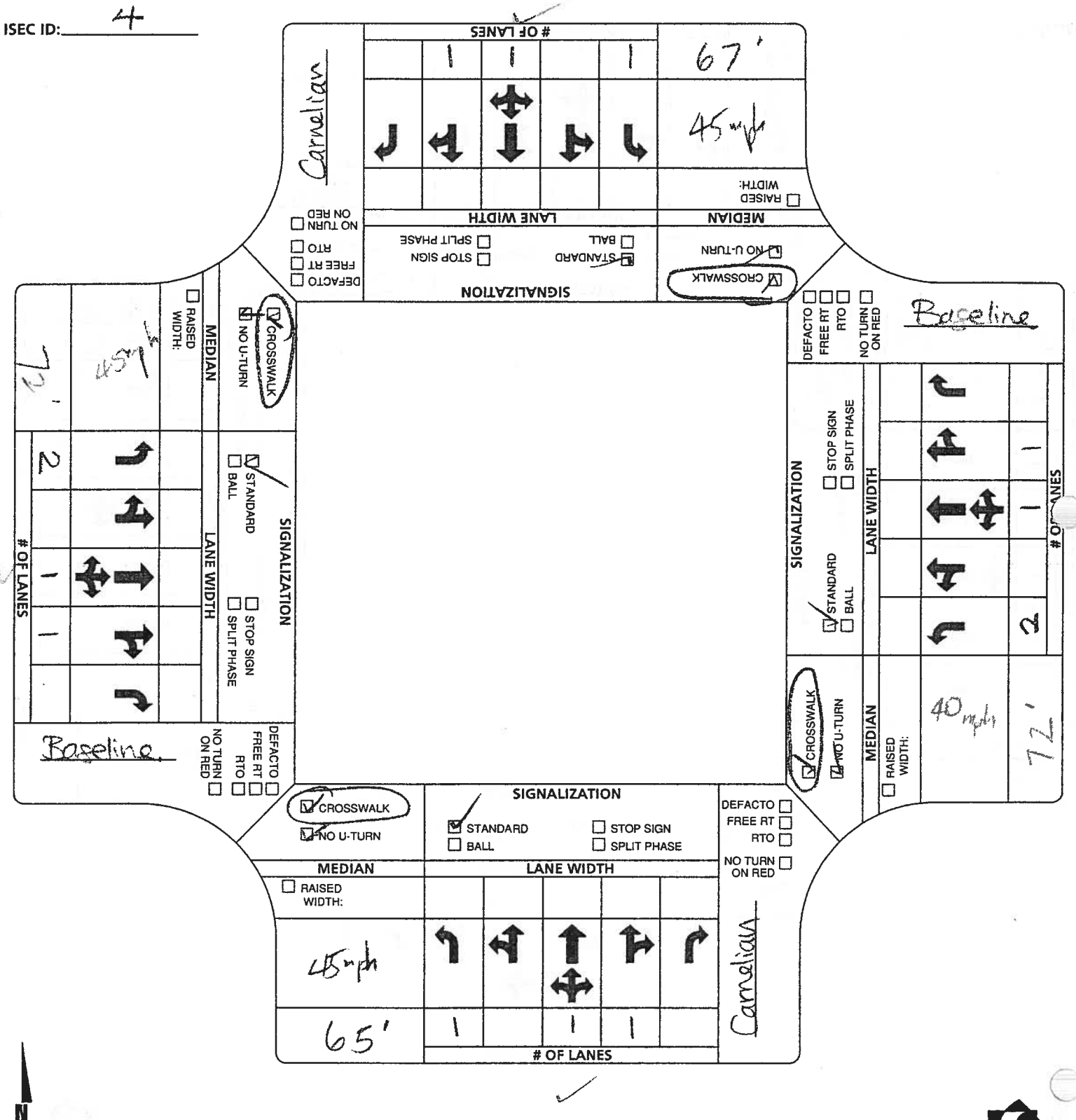

URBAN CROSSROADS INTERSECTION GEOMETRY

N/S: Vineyard Av.
W: Foothill Bl.
JOB#: 6786
ISEC ID: 5

RECEIVED
JUN 11 2009
BY:

DATE:
SURVEYOR: JH

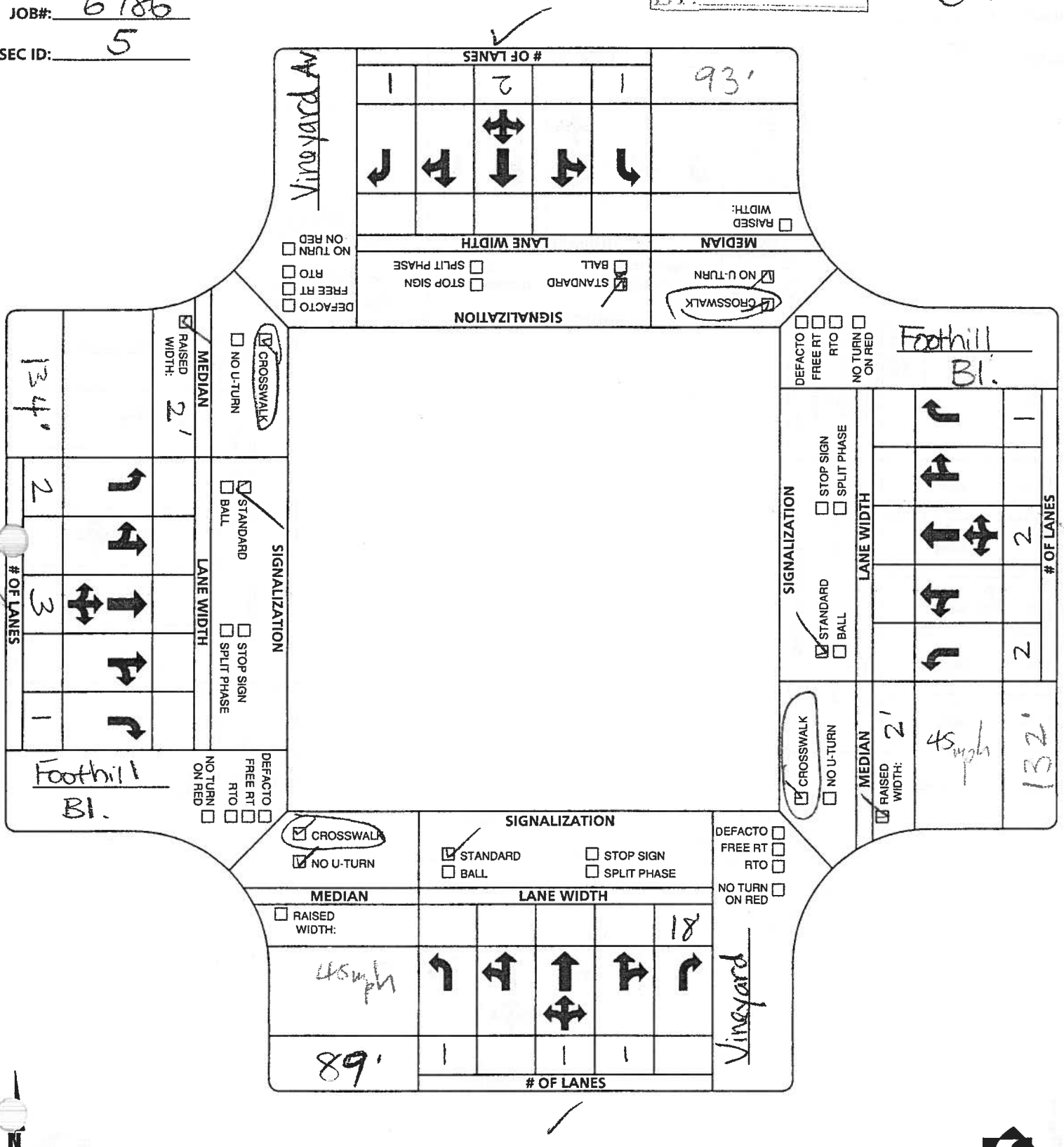

U:\CAD\SURVEY.dwg Rev. 040112 - DG

URBAN CROSSROADS INTERSECTION GEOMETRY

N/S: Vineyard Av.
E/W: Arrow Hwy.
JOB#: 6786
ISEC ID: 6

RECEIVED
JUN 11 2009
BY:

DATE:
SURVEYOR:

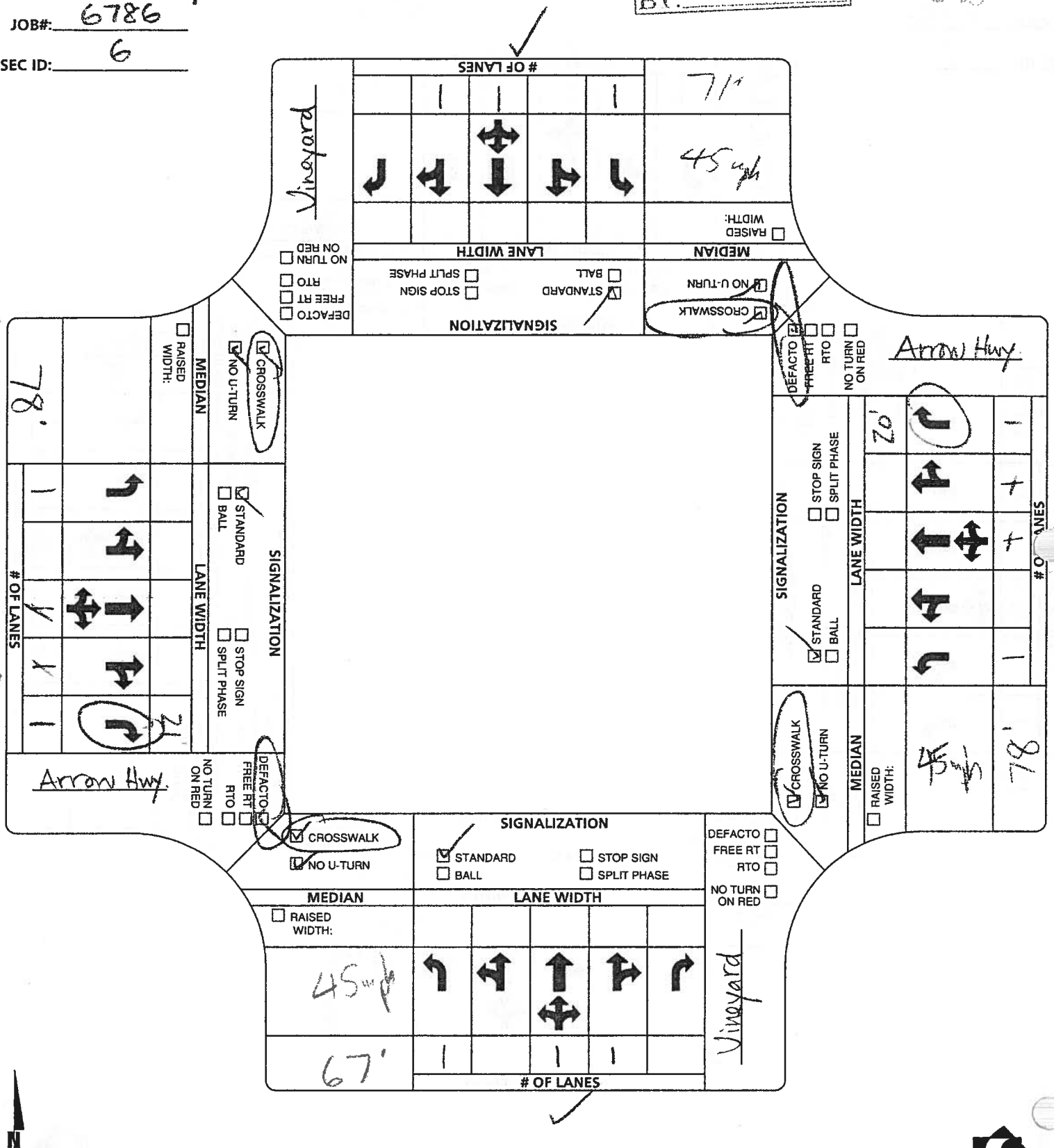

URBAN CROSSROADS INTERSECTION GEOMETRY

N/S: Archibald Av.
/W: 19th St. (SR-30)
JOB#: 6786
ISEC ID: 7

RECEIVED
JUN 11 2009
BY:

DATE:
SURVEYOR: JA

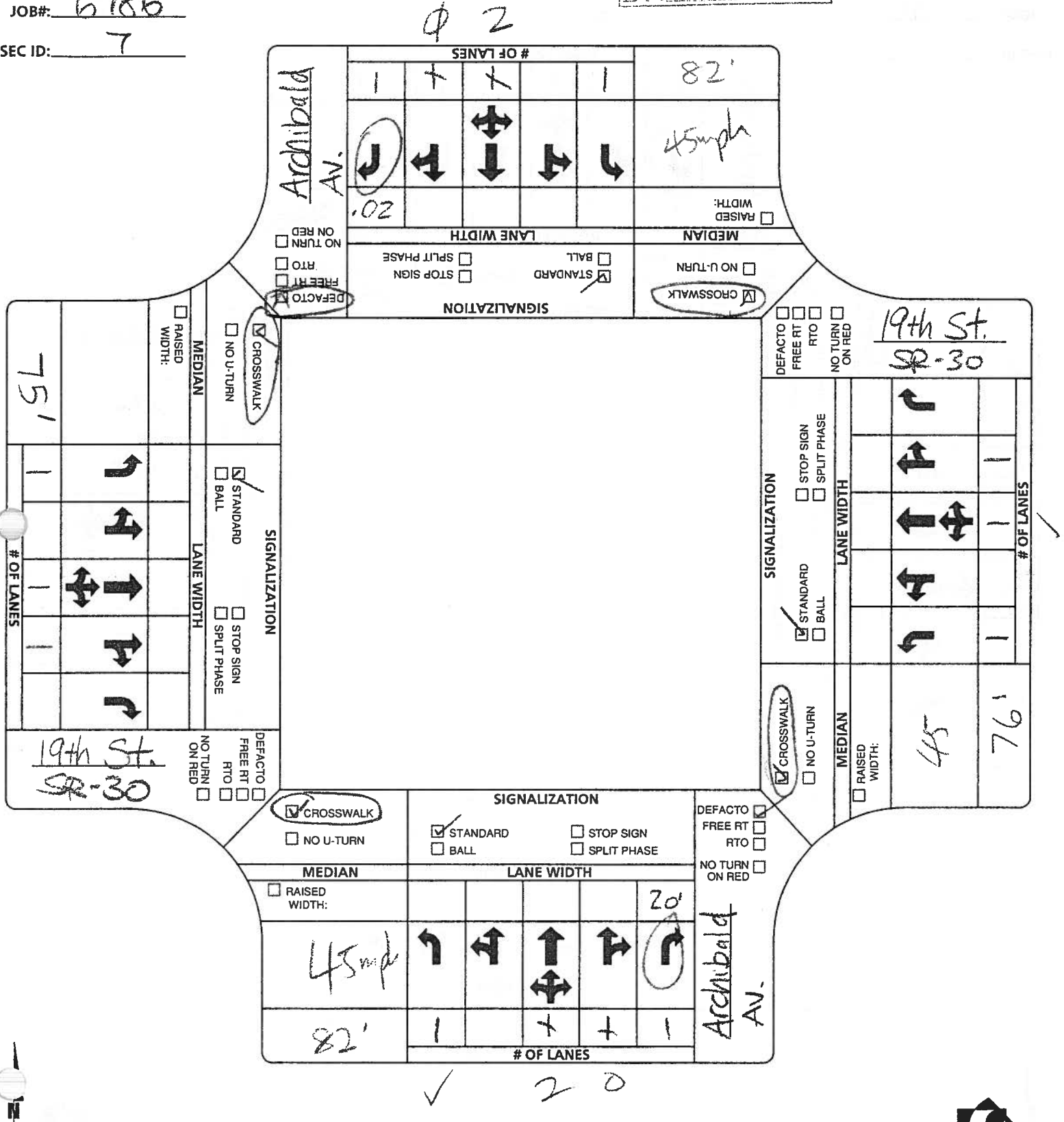

URBAN CROSSROADS INTERSECTION GEOMETRY

N/S: Archibald Av.
E/W: Baseline Rd.
JOB#: 6786
ISEC ID: 8

RECEIVED
JUN 11 2009
BY:

DATE:
SURVEYOR: JH

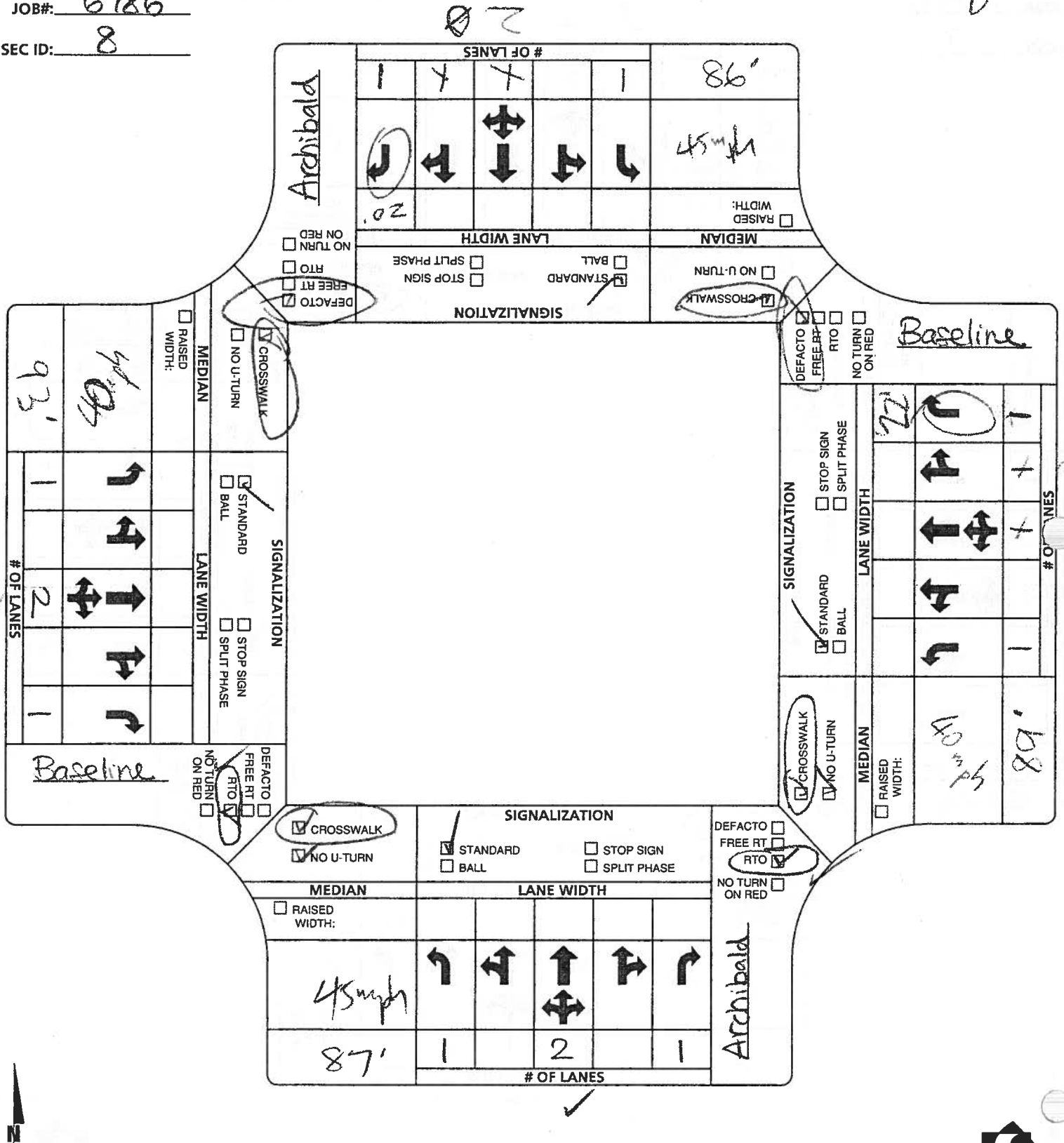

N

U:\CAD\SURVEY.dwg Rev. 040112 - DG

URBAN CROSSROADS

URBAN CROSSROADS INTERSECTION GEOMETRY

N/S: Archibald Av.
W: Foothill Bl. (US-66)
JOB#: 6786
ISEC ID: 9

RECEIVED
JUN 11 2009
BY:

DATE:
SURVEYOR: JA

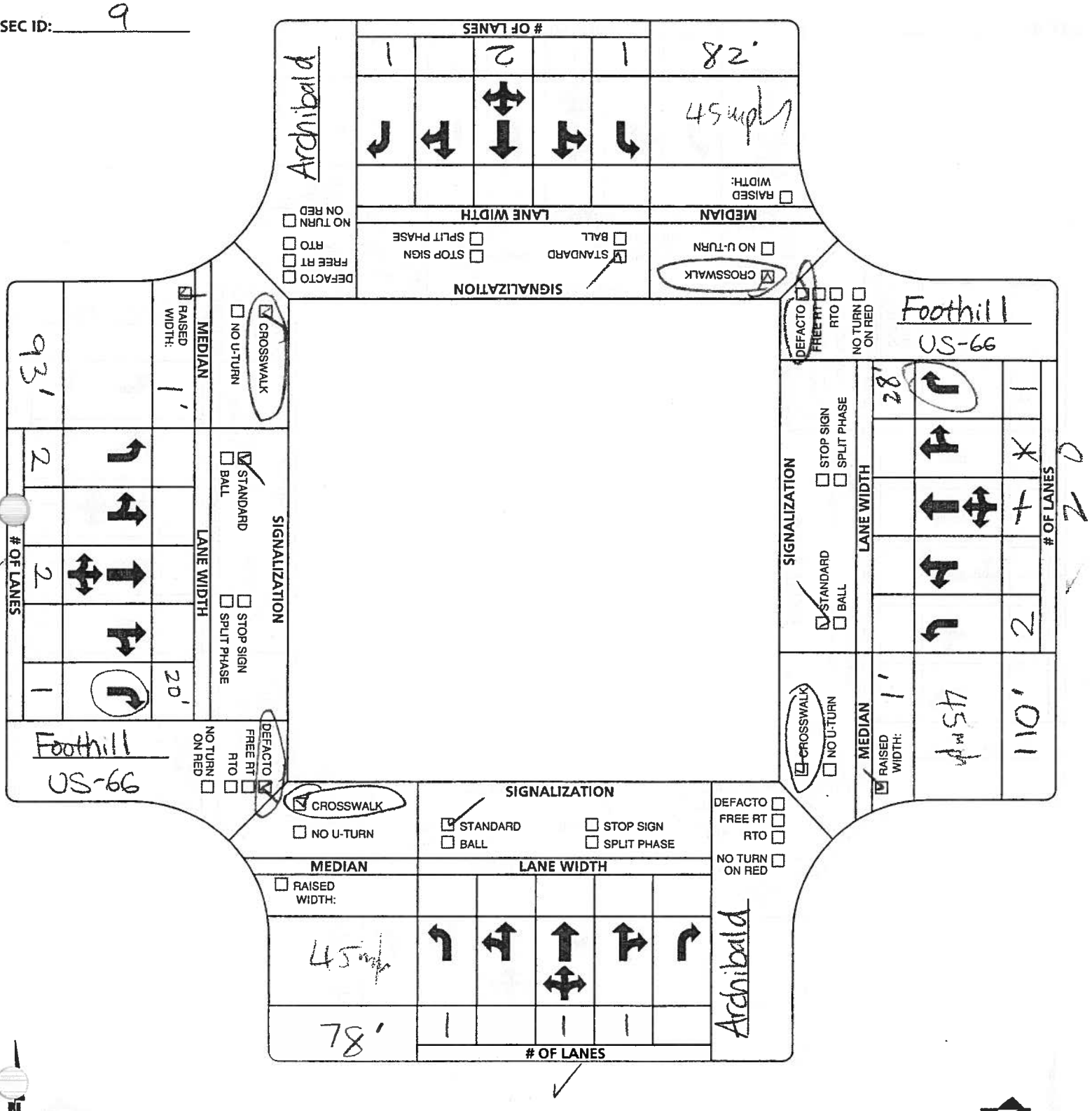

U:\CAD\SURVEY.dwg Rev. 040112 - DG

URBAN CROSSROADS INTERSECTION GEOMETRY

N/S: Archibald Av.
E/W: Arrow Hwy.
JOB#: 6786
ISEC ID: 10

RECEIVED
JUN 11 2009
BY:

DATE:
SURVEYOR:

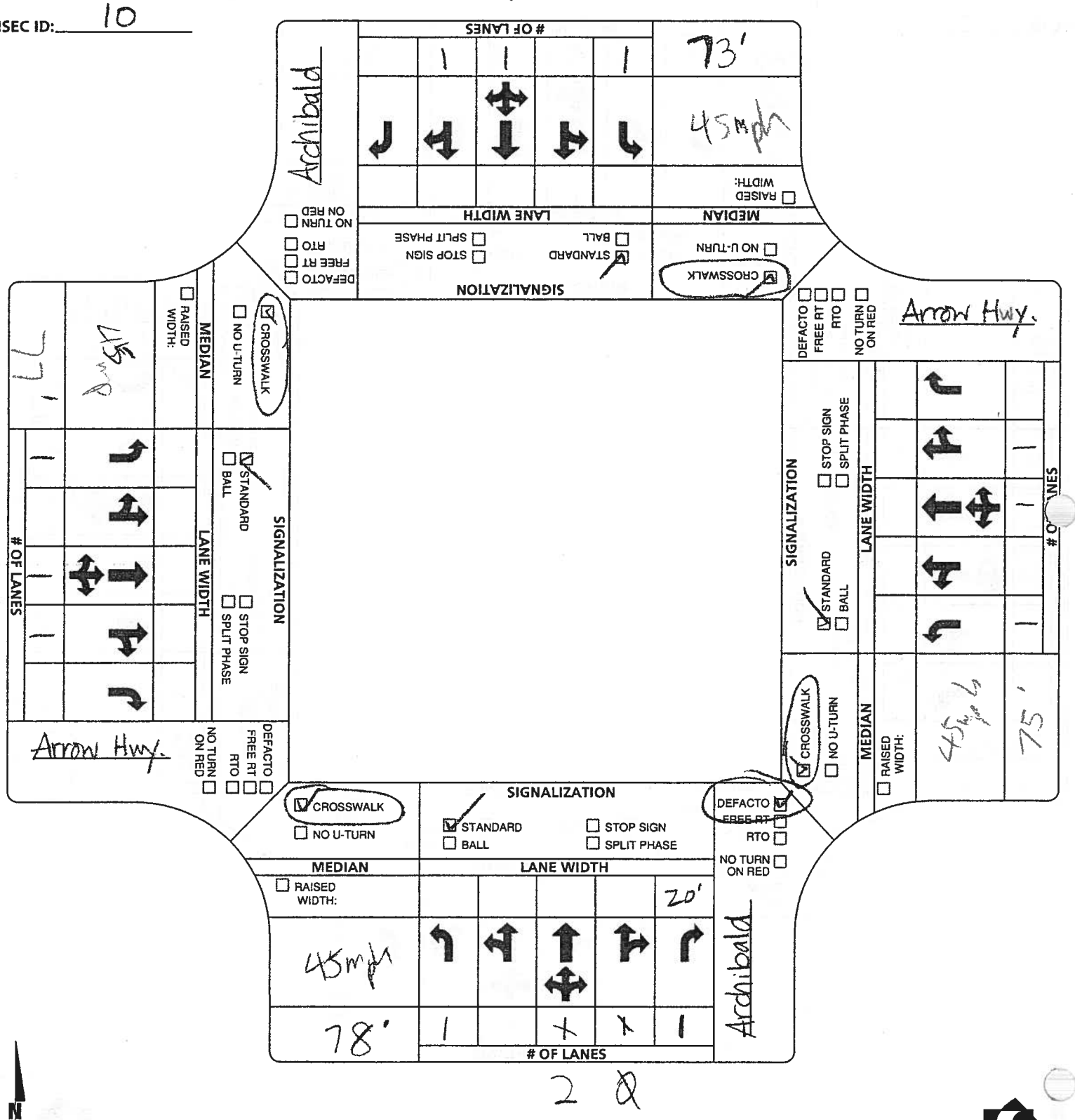

2 Q

N

U:\CAD\SURVEY.dwg Rev. 040112 - DG

URBAN CROSSROADS

URBAN CROSSROADS INTERSECTION GEOMETRY

N/S: Archibald Av.
W/: 4th St.
JOB#: 6786
ISEC ID: 11

RECEIVED
JUN 11 2009
BY:
DATE:
SURVEYOR: JH

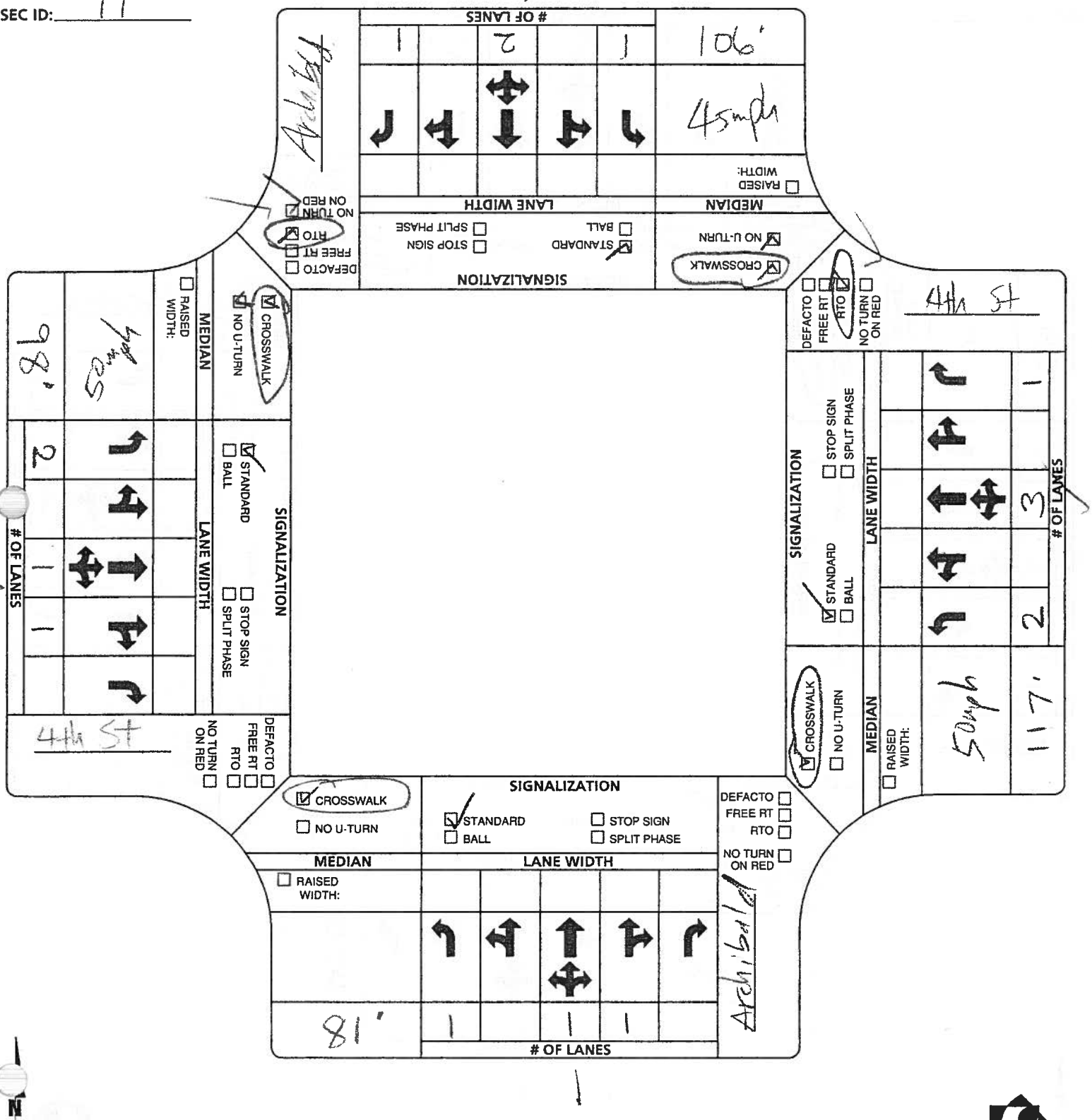

U:\CAD\SURVEY.dwg Rev. 040112 - DG

URBAN CROSSROADS INTERSECTION GEOMETRY

N/S: Haven Av.
E/W: Baseline Rd.
JOB#: 6786
ISEC ID: 12

RECEIVED
JUN 11 2009
BY:
DATE:
SURVEYOR: JV

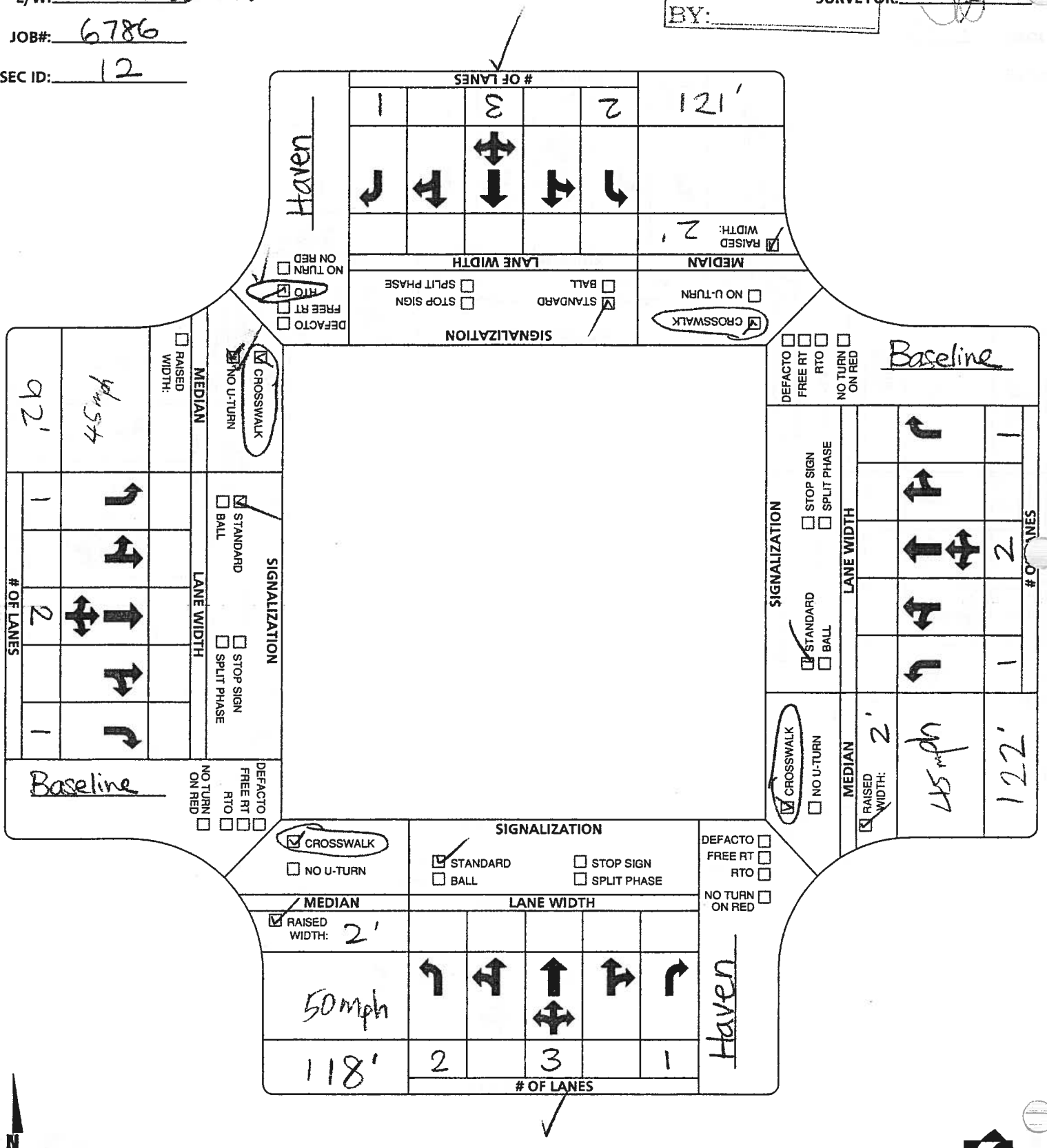

N

U:\CAD\SURVEY.dwg Rev. 040112 - DG

URBAN CROSSROADS

URBAN CROSSROADS INTERSECTION GEOMETRY

N/S: Haven Av.
W/: Foothill Bl.
JOB#: 6786
ISEC ID: 13

RECEIVED
JUN 11 2009
BY:

DATE:
SURVEYOR: JH

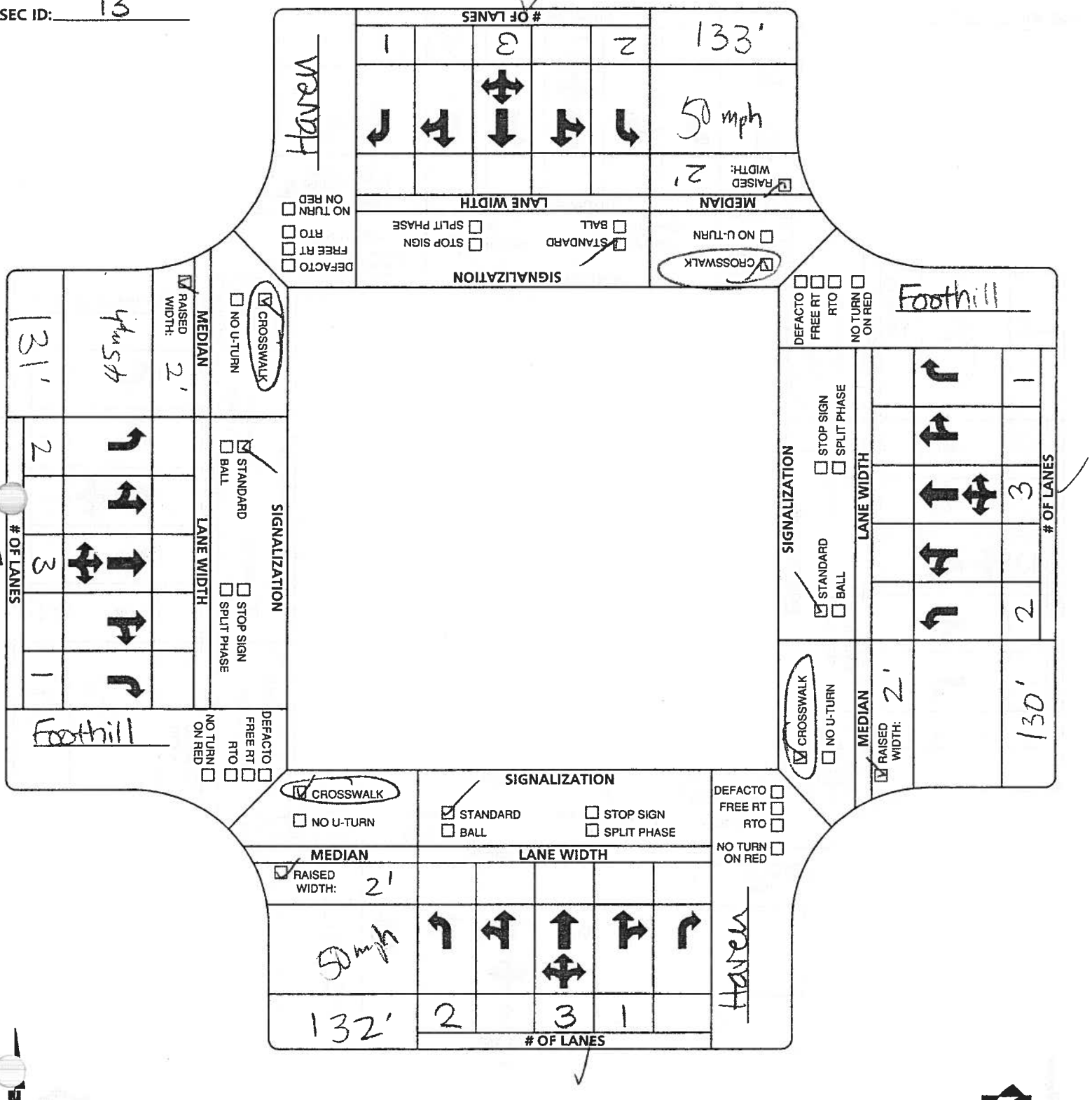

URBAN CROSSROADS INTERSECTION GEOMETRY

N/S: Haven Av.
E/W: Arrow Hwy.
JOB#: 6786
ISEC ID: 14

RECEIVED
JUN 11 2009
BY:

DATE:
SURVEYOR: JA

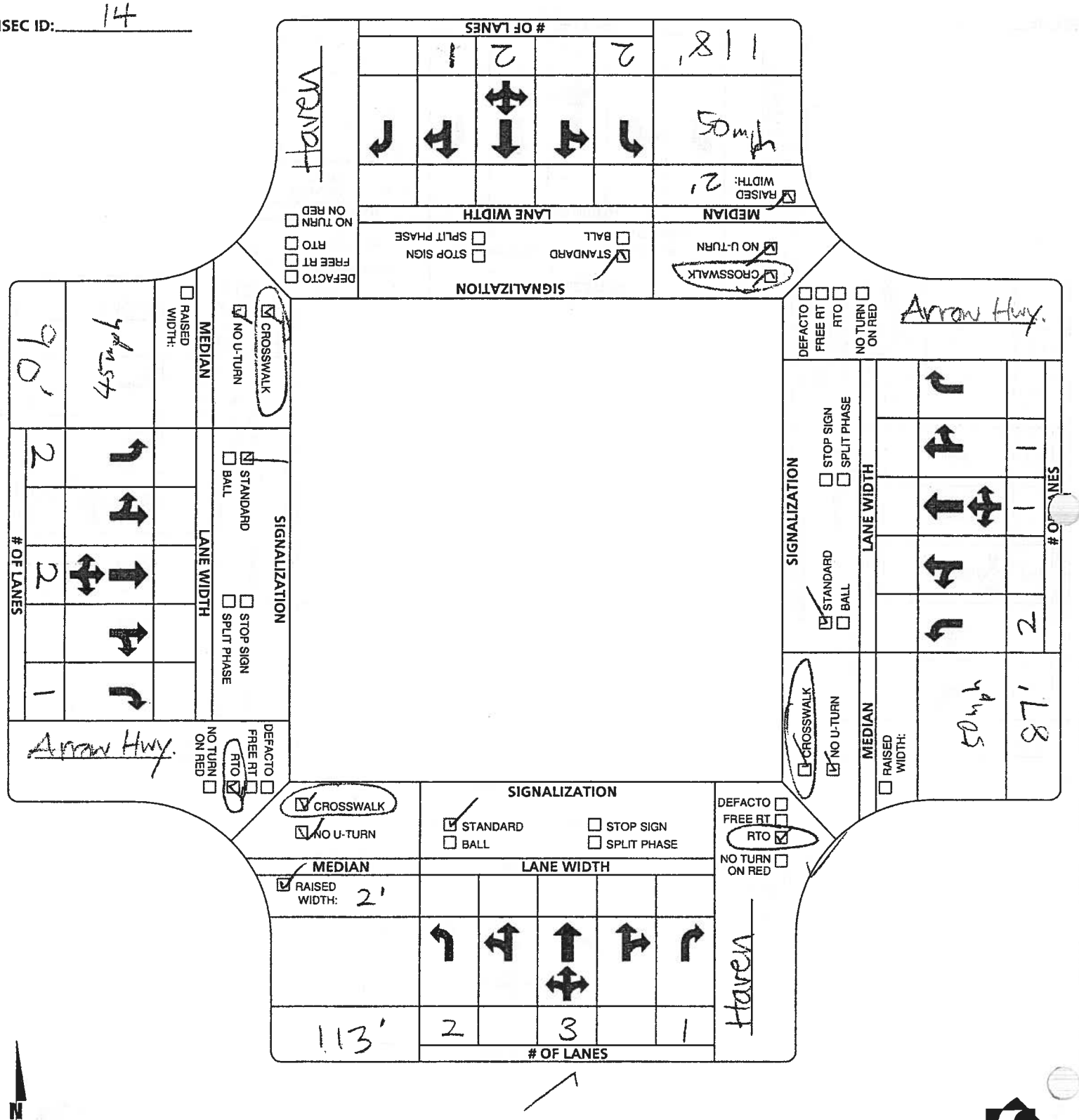

N

U:\CAD\SURVEY.dwg Rev. 040112 - DG

URBAN CROSSROADS

URBAN CROSSROADS INTERSECTION GEOMETRY

N/S: Milliken Av.
E/W: Baseline
JOB#: 6786
ISEC ID: 15

RECEIVED
JUN 11 2009
BY:

DATE:
SURVEYOR: JA

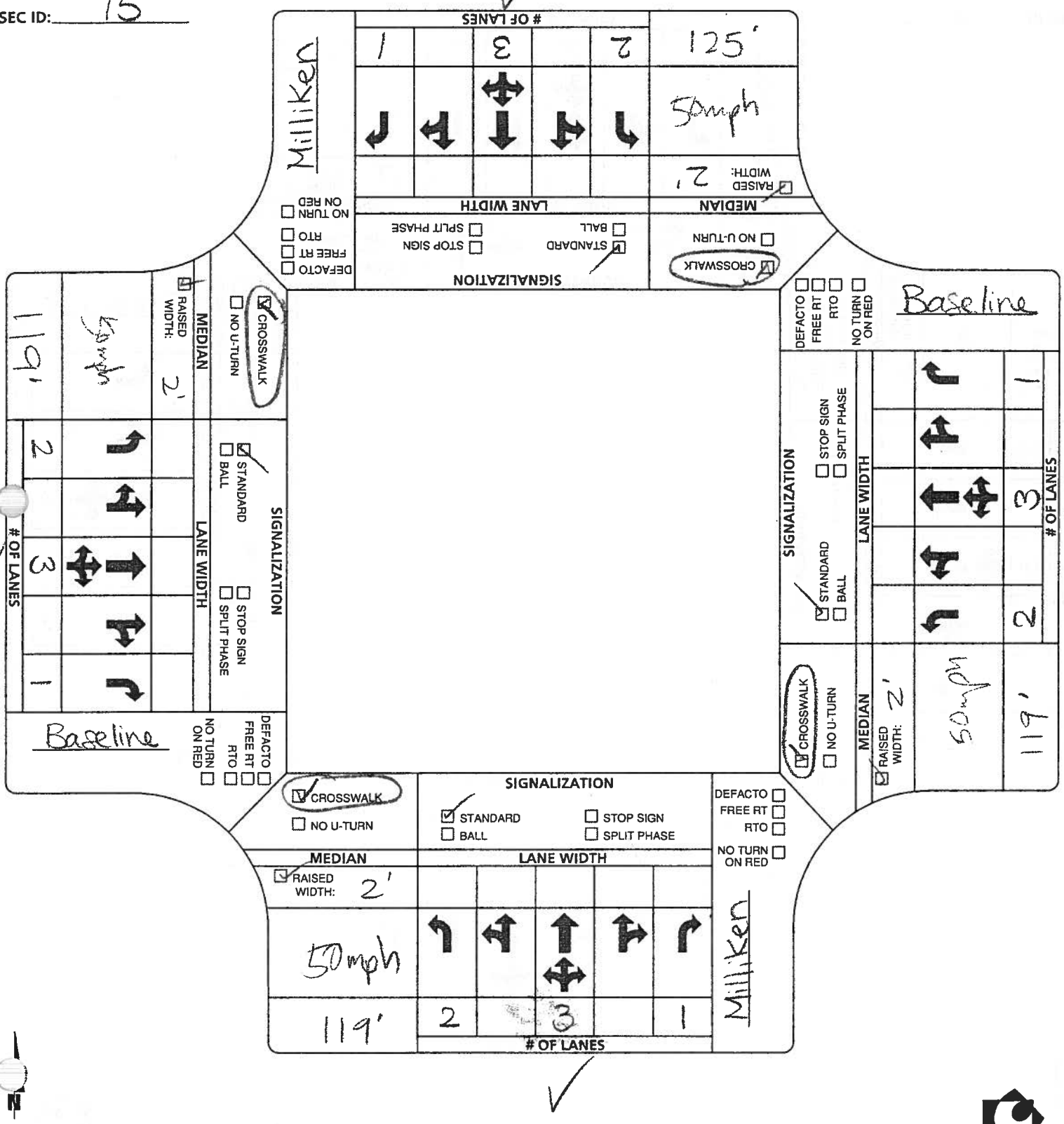

U:\CAD\SURVEY.dwg Rev. 040112 - DG

URBAN CROSSROADS INTERSECTION GEOMETRY

N/S: Milliken AV.

E/W: Foothill Bl.

JOB#: 6786

ISEC ID: 16

RECEIVED
JUN 11 2009
BY:

DATE:

SURVEYOR: JA

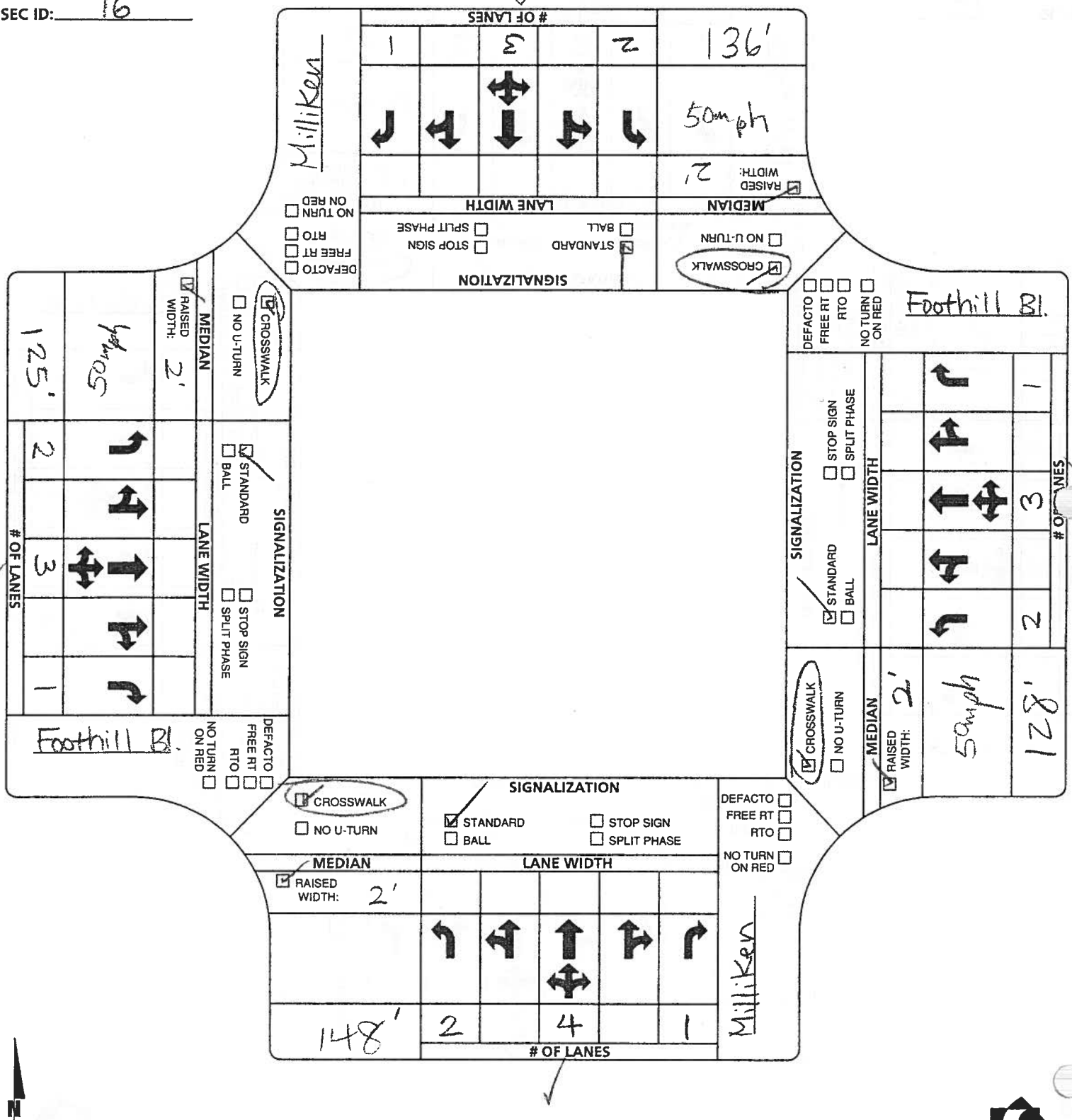

U:\CAD\SURVEY.dwg Rev. 040112 - DG

URBAN CROSSROADS INTERSECTION GEOMETRY

N/S: Milliken Av.
W: Arrow Hwy.
JOB#: 6786
ISEC ID: 17

RECEIVED
JUN 11 2009
BY:

DATE:
SURVEYOR: JA

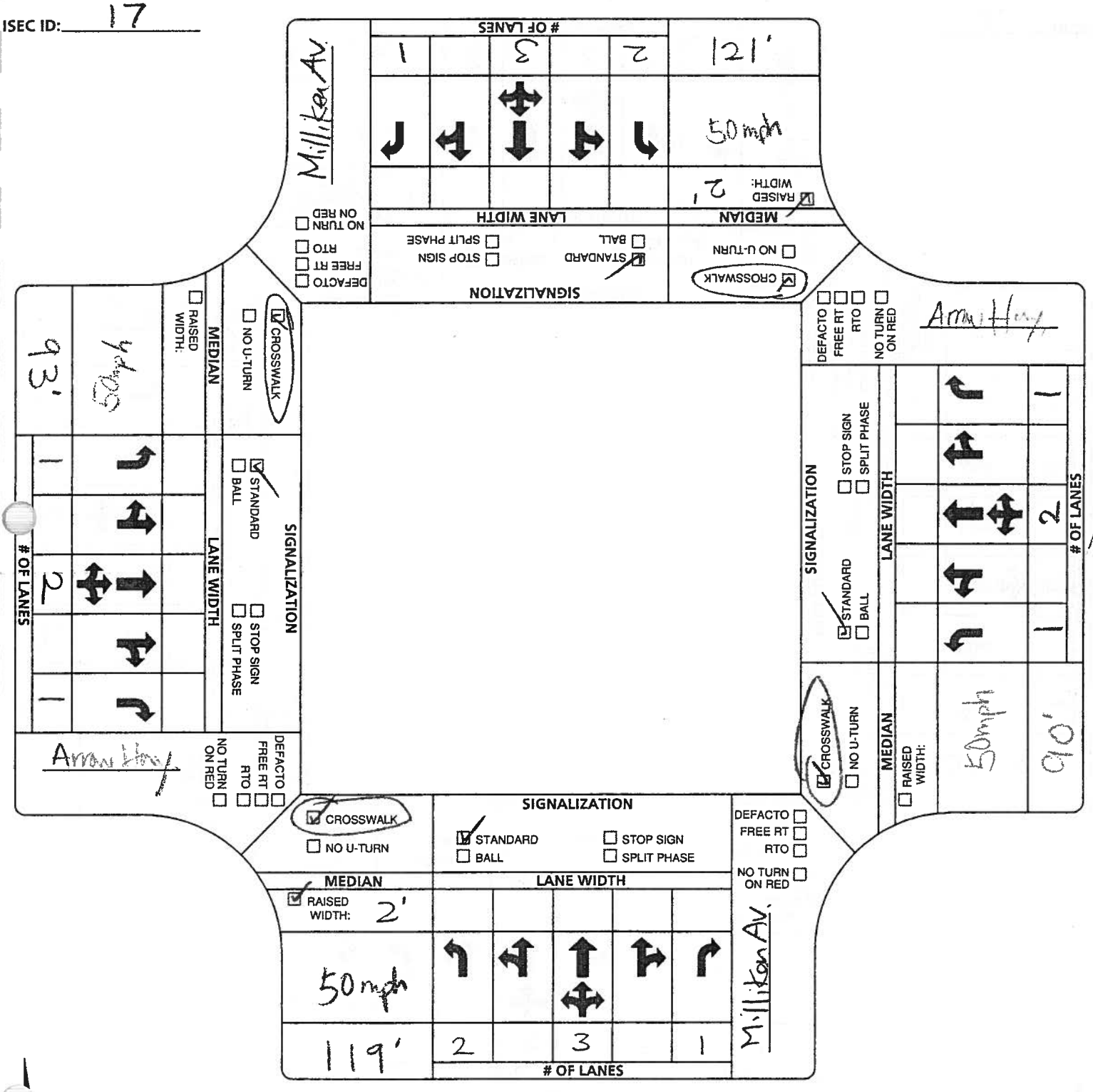

U:\CAD\SURVEY.dwg Rev. 040112 - DG

URBAN CROSSROADS INTERSECTION GEOMETRY

N/S: Milliken Av.
E/W: 4th St.
JOB#: 6786
ISEC ID: 18

RECEIVED
JUN 11 2009
BY:
DATE:
SURVEYOR: JA

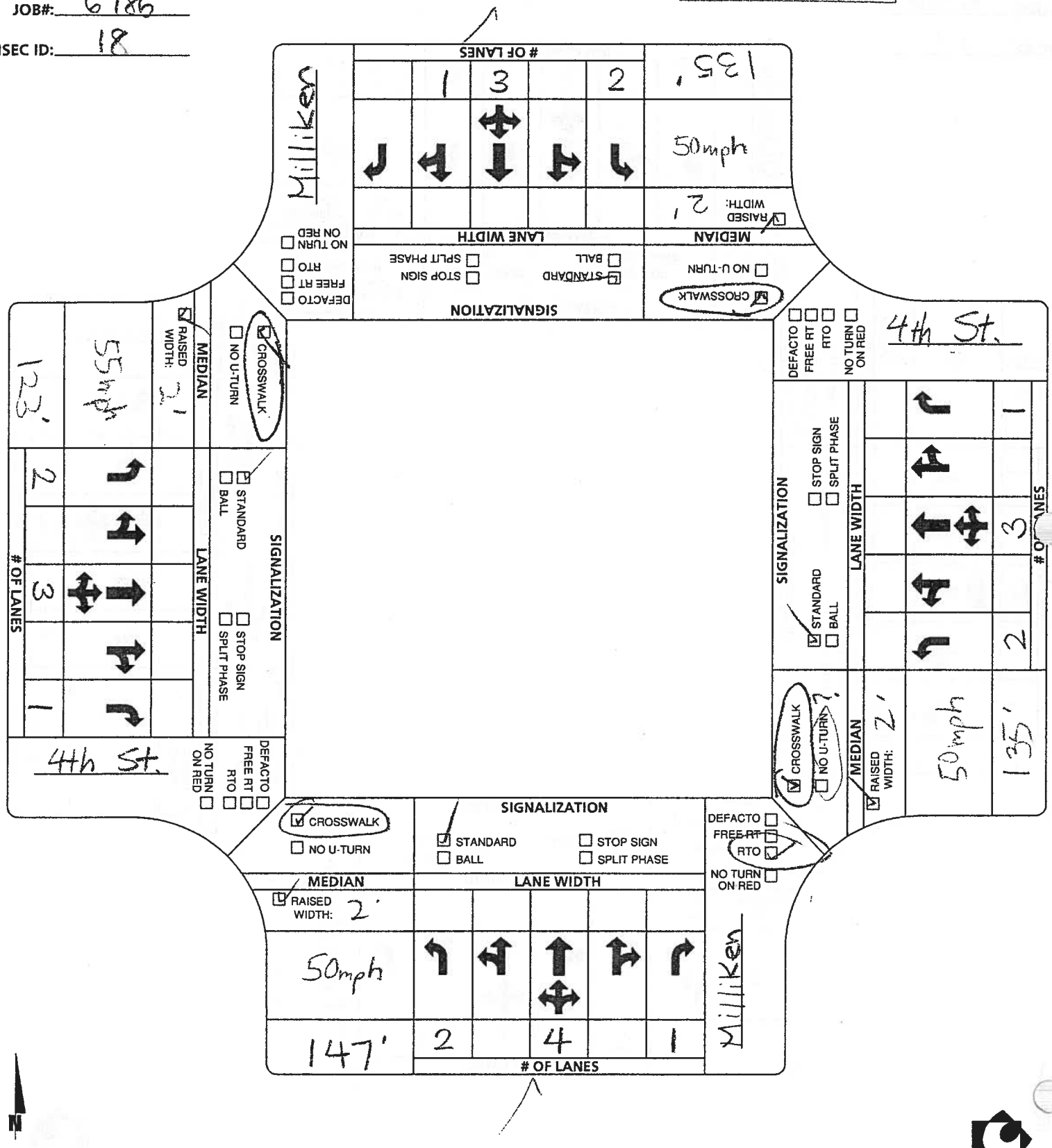

U:\CAD\SURVEY.dwg Rev. 040112 - DG

URBAN CROSSROADS INTERSECTION GEOMETRY

RECEIVED
JUN 11 2009
BY:

DATE:

SURVEYOR: JA

N/S: Etiwanda Av.

E/W: Baseline Rd.

JOB#: 6786

ISEC ID: 19

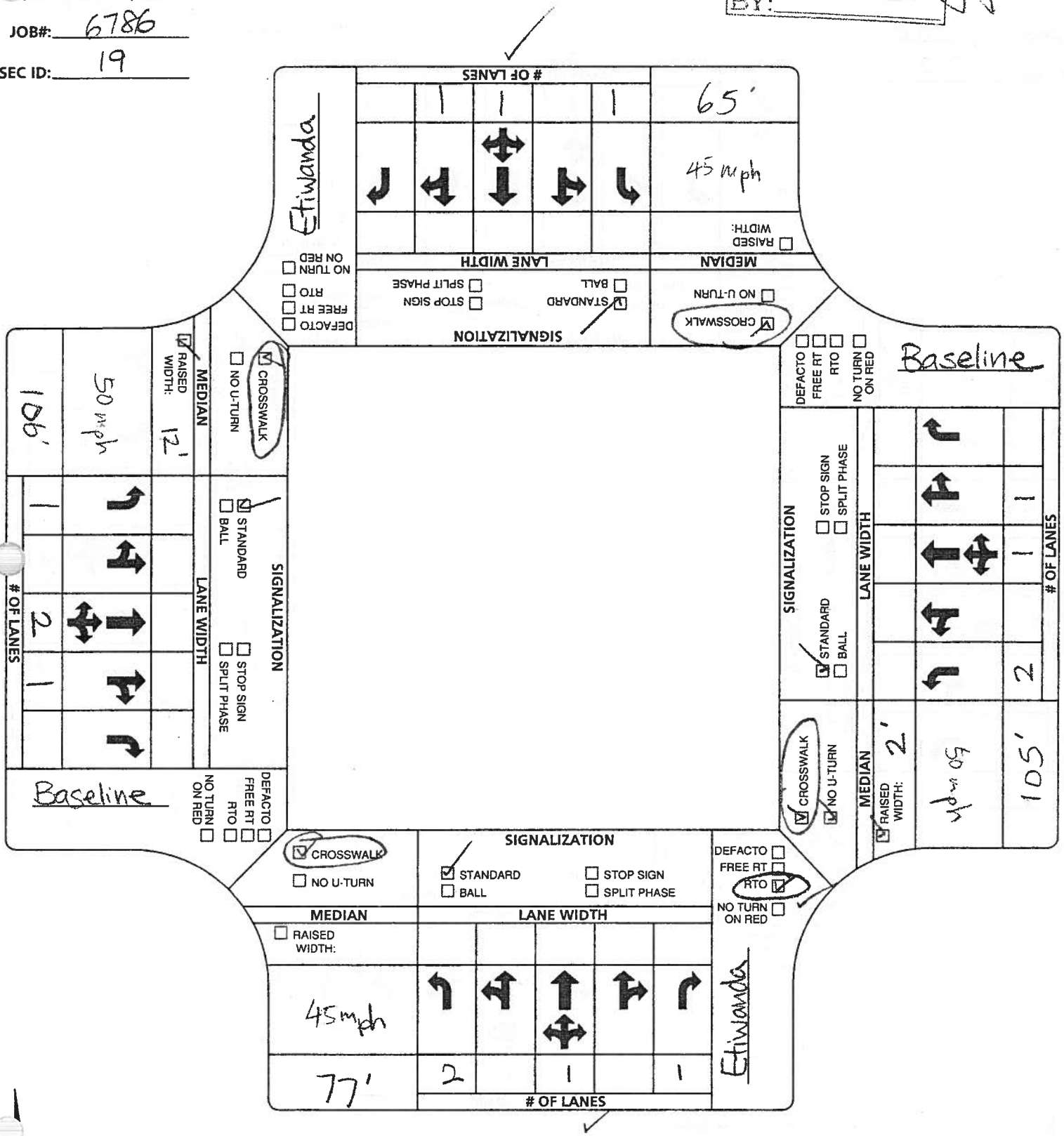

U:\CAD\SURVEY.dwg Rev. 040112 - DG

URBAN CROSSROADS INTERSECTION GEOMETRY

N/S: Etiwanda Av.
E/W: Foothill Bl.
JOB#: 6786
ISEC ID: 20

RECEIVED
DATE:
JUN 11 2009
SURVEYOR:
BY:

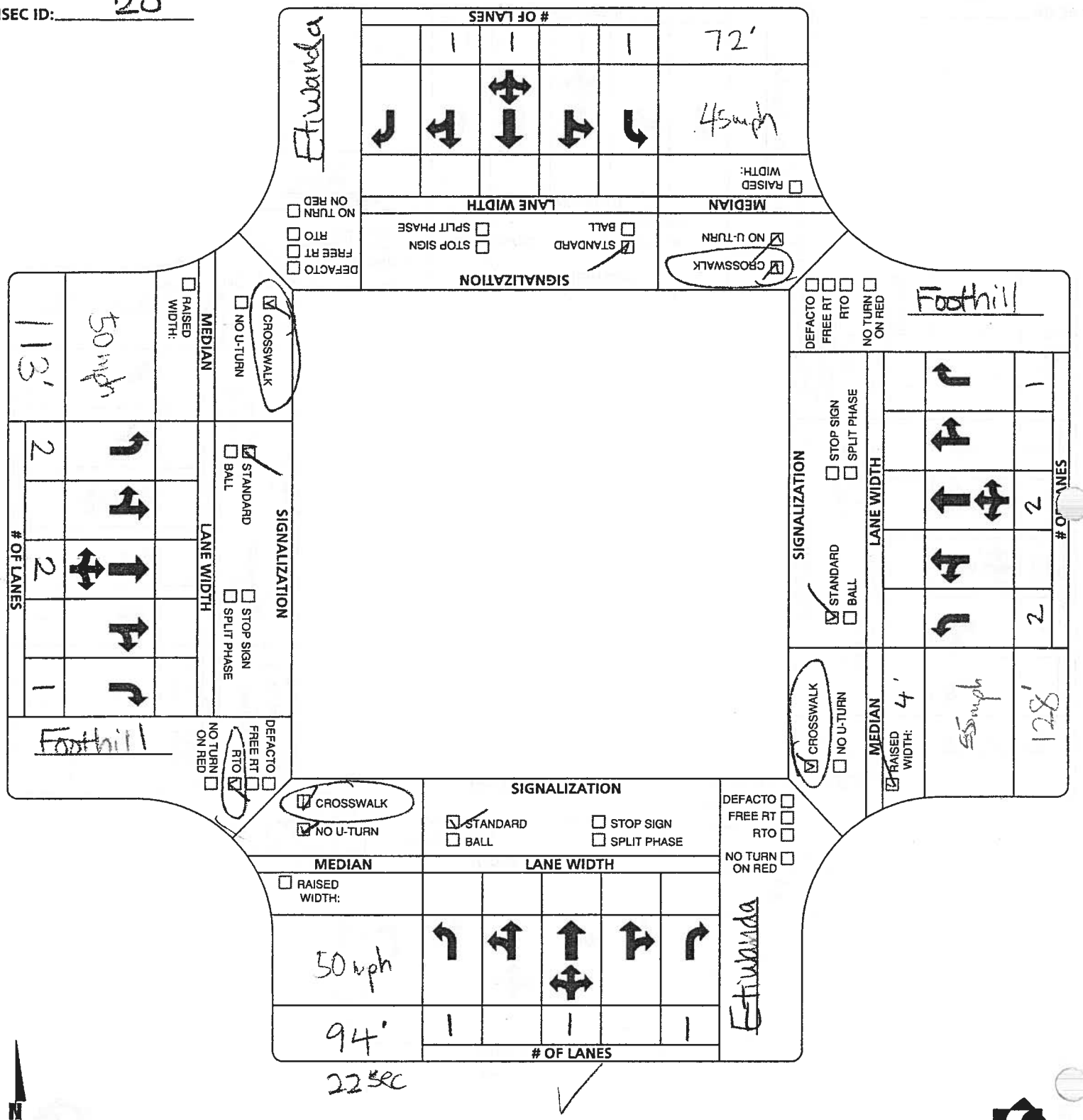

URBAN CROSSROADS INTERSECTION GEOMETRY

N/S: Etiwanda Av.
E/W: Arrow Hwy.
JOB#: 6786
ISEC ID: 21

RECEIVED
DATE: JUN 11 2009
SURVEYOR: JG
BY:

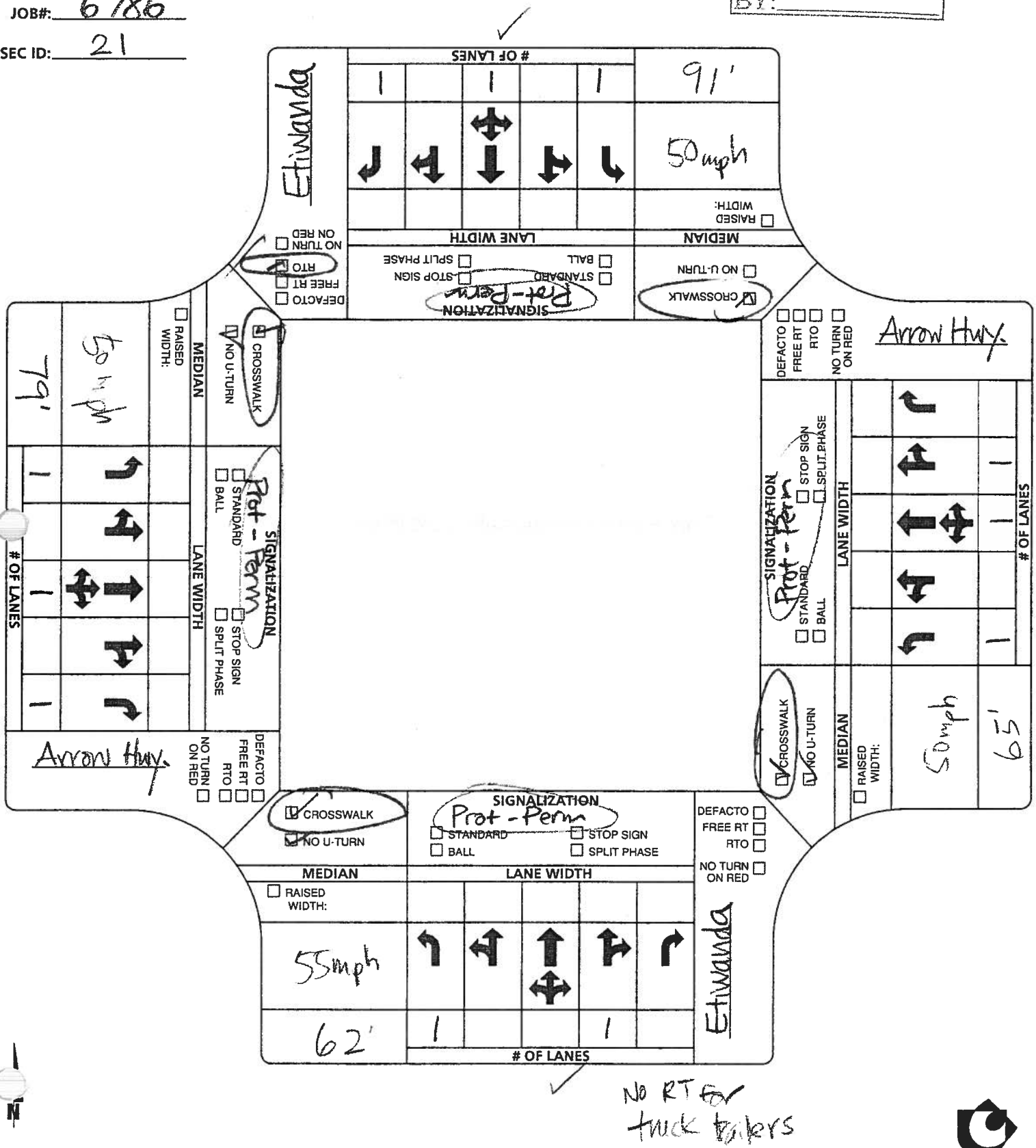

This Page Intentionally Left Blank

ATTACHMENT D

EXISTING CONDITIONS
INTERSECTION ANALYSIS WORKSHEETS

This Page Intentionally Left Blank

SANBAG CMP Monitoring - City of Rancho Cucamonga
2009 Traffic Conditions
With Existing Geometry

Level Of Service Computation Report
2000 HCM Operations Method (Base Volume Alternative)

Intersection #1 Grove Av. (NS) / Foothill Bl. (EW)

Cycle (sec): 65 Critical Vol./Cap.(X): 0.405
Loss Time (sec): 4 Average Delay (sec/veh): 12.5
Optimal Cycle: 65 Level Of Service: B

Approach:	North Bound			South Bound			East Bound			West Bound		
Movement:	L	T	R	L	T	R	L	T	R	L	T	R
Control:	Permitted			Permitted			Permitted			Permitted		
Rights:	Include			Include			Include			Include		
Min. Green:	33	33	33	33	33	33	28	28	28	28	28	28
Y+R:	4.0	4.0	4.0	4.0	4.0	4.0	4.0	4.0	4.0	4.0	4.0	4.0
Lanes:	1 0	1 0	1	1 0	2 0	1	1 0	2 0	1	1 0	1 1	0
Volume Module:												
Base Vol:	197	72	73	54	63	10	11	537	151	90	812	28
Growth Adj:	1.00	1.00	1.00	1.00	1.00	1.00	1.00	1.00	1.00	1.00	1.00	1.00
Initial Bse:	197	72	73	54	63	10	11	537	151	90	812	28
User Adj:	1.00	1.00	1.00	1.00	1.00	1.00	1.00	1.00	1.00	1.00	1.00	1.00
PHF Adj:	0.95	0.95	0.95	0.95	0.95	0.95	0.95	0.95	0.95	0.95	0.95	0.95
PHF Volume:	207	76	77	57	66	11	12	565	159	95	855	29
Reduct Vol:	0	0	0	0	0	0	0	0	0	0	0	0
Reduced Vol:	207	76	77	57	66	11	12	565	159	95	855	29
PCE Adj:	1.00	1.00	1.00	1.00	1.00	1.00	1.00	1.00	1.00	1.00	1.00	1.00
MLF Adj:	1.00	1.00	1.00	1.00	1.05	1.00	1.00	1.05	1.00	1.00	1.05	1.05
FinalVolume:	207	76	77	57	70	11	12	594	159	95	897	31
Saturation Flow Module:												
Sat/Lane:	1800	1800	1800	1800	1800	1800	1800	1800	1800	1800	1800	1800
Adjustment:	0.94	1.00	1.00	0.94	1.00	1.00	0.94	1.00	1.00	0.94	1.00	1.00
Lanes:	1.00	1.00	1.00	1.00	2.00	1.00	1.00	2.00	1.00	1.00	1.93	0.07
Final Sat.:	1700	1800	1800	1700	3600	1800	1700	3600	1800	1700	3480	120
Capacity Analysis Module:												
Vol/Sat:	0.12	0.04	0.04	0.03	0.02	0.01	0.01	0.16	0.09	0.06	0.26	0.26
Crit Moves:	****										****	
Green/Cycle:	0.51	0.51	0.51	0.51	0.51	0.51	0.43	0.43	0.43	0.43	0.43	0.43
Volume/Cap:	0.24	0.08	0.08	0.07	0.04	0.01	0.02	0.38	0.20	0.13	0.60	0.60
Delay/Veh:	9.1	8.3	8.3	8.2	8.0	7.9	10.6	12.8	11.7	11.2	14.8	14.8
User DelAdj:	1.00	1.00	1.00	1.00	1.00	1.00	1.00	1.00	1.00	1.00	1.00	1.00
AdjDel/Veh:	9.1	8.3	8.3	8.2	8.0	7.9	10.6	12.8	11.7	11.2	14.8	14.8
LOS by Move:	A	A	A	A	A	A	B	B	B	B	B	B
HCM2kAvgQ:	2	1	1	1	0	0	0	4	2	1	7	7

Note: Queue reported is the number of cars per lane.

Traffix 8.0.0715 (c) 2008 Dowling Assoc. Licensed to URBAN CROSSROADS, IRVINE

SANBAG CMP Monitoring - City of Rancho Cucamonga
2009 Traffic Conditions
With Existing Geometry

Level Of Service Computation Report
2000 HCM Operations Method (Base Volume Alternative)

Intersection #1 Grove Av. (NS) / Foothill Bl. (EW)

Cycle (sec):	65	Critical Vol./Cap.(X):	0.492
Loss Time (sec):	4	Average Delay (sec/veh):	14.4
Optimal Cycle:	65	Level Of Service:	B

Approach:	North Bound			South Bound			East Bound			West Bound		
Movement:	L	T	R	L	T	R	L	T	R	L	T	R
Control:	Permitted			Permitted			Permitted			Permitted		
Rights:	Include			Include			Include			Include		
Min. Green:	33	33	33	33	33	33	28	28	28	28	28	28
Y+R:	4.0	4.0	4.0	4.0	4.0	4.0	4.0	4.0	4.0	4.0	4.0	4.0
Lanes:	1 0	1 0	1	1 0	2 0	1	1 0	2 0	1	1 0	1 1	0
Volume Module:												
Base Vol:	199	141	170	111	97	22	17	1104	164	98	693	89
Growth Adj:	1.00	1.00	1.00	1.00	1.00	1.00	1.00	1.00	1.00	1.00	1.00	1.00
Initial Bse:	199	141	170	111	97	22	17	1104	164	98	693	89
User Adj:	1.00	1.00	1.00	1.00	1.00	1.00	1.00	1.00	1.00	1.00	1.00	1.00
PHF Adj:	0.95	0.95	0.95	0.95	0.95	0.95	0.95	0.95	0.95	0.95	0.95	0.95
PHF Volume:	209	148	179	117	102	23	18	1162	173	103	729	94
Reduct Vol:	0	0	0	0	0	0	0	0	0	0	0	0
Reduced Vol:	209	148	179	117	102	23	18	1162	173	103	729	94
PCE Adj:	1.00	1.00	1.00	1.00	1.00	1.00	1.00	1.00	1.00	1.00	1.00	1.00
MLF Adj:	1.00	1.00	1.00	1.00	1.05	1.00	1.00	1.05	1.00	1.00	1.05	1.05
FinalVolume:	209	148	179	117	107	23	18	1220	173	103	766	98
Saturation Flow Module:												
Sat/Lane:	1800	1800	1800	1800	1800	1800	1800	1800	1800	1800	1800	1800
Adjustment:	0.94	1.00	1.00	0.94	1.00	1.00	0.94	1.00	1.00	0.94	1.00	1.00
Lanes:	1.00	1.00	1.00	1.00	2.00	1.00	1.00	2.00	1.00	1.00	1.77	0.23
Final Sat.:	1700	1800	1800	1700	3600	1800	1700	3600	1800	1700	3190	410
Capacity Analysis Module:												
Vol/Sat:	0.12	0.08	0.10	0.07	0.03	0.01	0.01	0.34	0.10	0.06	0.24	0.24
Crit Moves:	****							****				
Green/Cycle:	0.51	0.51	0.51	0.51	0.51	0.51	0.43	0.43	0.43	0.43	0.43	0.43
Volume/Cap:	0.24	0.16	0.20	0.14	0.06	0.03	0.02	0.79	0.22	0.14	0.56	0.56
Delay/Veh:	9.1	8.7	8.9	8.5	8.1	8.0	10.7	18.7	11.8	11.3	14.3	14.3
User DelAdj:	1.00	1.00	1.00	1.00	1.00	1.00	1.00	1.00	1.00	1.00	1.00	1.00
AdjDel/Veh:	9.1	8.7	8.9	8.5	8.1	8.0	10.7	18.7	11.8	11.3	14.3	14.3
LOS by Move:	A	A	A	A	A	A	B	B	B	B	B	B
HCM2kAvgQ:	2	2	2	1	1	0	0	13	2	1	6	6

Note: Queue reported is the number of cars per lane.

Traffix 8.0.0715 (c) 2008 Dowling Assoc. Licensed to URBAN CROSSROADS, IRVINE

SANBAG CMP Monitoring - City of Rancho Cucamonga
2009 Traffic Conditions
With Existing Geometry

Level Of Service Computation Report
2000 HCM Operations Method (Base Volume Alternative)

Intersection #2 Grove Av. (NS) / Arrow Rte. (EW)

Cycle (sec):	60	Critical Vol./Cap.(X):	0.446
Loss Time (sec):	4	Average Delay (sec/veh):	10.3
Optimal Cycle:	60	Level Of Service:	B

Approach:	North Bound			South Bound			East Bound			West Bound		
Movement:	L	T	R	L	T	R	L	T	R	L	T	R
Control:	Permitted			Permitted			Permitted			Permitted		
Rights:	Include			Include			Include			Include		
Min. Green:	19	19	19	19	19	19	22	22	22	22	22	22
Y+R:	4.0	4.0	4.0	4.0	4.0	4.0	4.0	4.0	4.0	4.0	4.0	4.0
Lanes:	1 0	1 0	1	1 0	0 1	0	1 0	0 1	0	1 0	0 1	0
Volume Module:												
Base Vol:	95	380	125	69	358	20	6	183	39	133	262	70
Growth Adj:	1.00	1.00	1.00	1.00	1.00	1.00	1.00	1.00	1.00	1.00	1.00	1.00
Initial Bse:	95	380	125	69	358	20	6	183	39	133	262	70
User Adj:	1.00	1.00	1.00	1.00	1.00	1.00	1.00	1.00	1.00	1.00	1.00	1.00
PHF Adj:	0.95	0.95	0.95	0.95	0.95	0.95	0.95	0.95	0.95	0.95	0.95	0.95
PHF Volume:	100	400	132	73	377	21	6	193	41	140	276	74
Reduct Vol:	0	0	0	0	0	0	0	0	0	0	0	0
Reduced Vol:	100	400	132	73	377	21	6	193	41	140	276	74
PCE Adj:	1.00	1.00	1.00	1.00	1.00	1.00	1.00	1.00	1.00	1.00	1.00	1.00
MLF Adj:	1.00	1.00	1.00	1.00	1.00	1.00	1.00	1.00	1.00	1.00	1.00	1.00
FinalVolume:	100	400	132	73	377	21	6	193	41	140	276	74
Saturation Flow Module:												
Sat/Lane:	1800	1800	1800	1800	1800	1800	1800	1800	1800	1800	1800	1800
Adjustment:	0.94	1.00	1.00	0.94	1.00	1.00	0.94	1.00	1.00	0.94	1.00	1.00
Lanes:	1.00	1.00	1.00	1.00	0.95	0.05	1.00	0.82	0.18	1.00	0.79	0.21
Final Sat.:	1700	1800	1800	1700	1705	95	1700	1484	316	1700	1420	380
Capacity Analysis Module:												
Vol/Sat:	0.06	0.22	0.07	0.04	0.22	0.22	0.00	0.13	0.13	0.08	0.19	0.19
Crit Moves:		****									****	
Green/Cycle:	0.50	0.50	0.50	0.50	0.50	0.50	0.44	0.44	0.44	0.44	0.44	0.44
Volume/Cap:	0.12	0.45	0.15	0.09	0.44	0.44	0.01	0.30	0.30	0.19	0.45	0.45
Delay/Veh:	8.1	10.1	8.2	7.9	10.1	10.1	9.6	11.2	11.2	10.6	12.3	12.3
User DelAdj:	1.00	1.00	1.00	1.00	1.00	1.00	1.00	1.00	1.00	1.00	1.00	1.00
AdjDel/Veh:	8.1	10.1	8.2	7.9	10.1	10.1	9.6	11.2	11.2	10.6	12.3	12.3
LOS by Move:	A	B	A	A	B	B	A	B	B	B	B	B
HCM2kAvgQ:	1	5	1	1	5	5	0	3	3	2	4	4

Note: Queue reported is the number of cars per lane.

Traffix 8.0.0715 (c) 2008 Dowling Assoc. Licensed to URBAN CROSSROADS, IRVINE

SANBAG CMP Monitoring - City of Rancho Cucamonga
2009 Traffic Conditions
With Existing Geometry

Level Of Service Computation Report
2000 HCM Operations Method (Base Volume Alternative)

Intersection #2 Grove Av. (NS) / Arrow Rte. (EW)

Cycle (sec): 60 Critical Vol./Cap.(X): 0.533
Loss Time (sec): 4 Average Delay (sec/veh): 10.7
Optimal Cycle: 60 Level Of Service: B

Approach:	North Bound			South Bound			East Bound			West Bound		
Movement:	L	T	R	L	T	R	L	T	R	L	T	R
Control:	Permitted			Permitted			Permitted			Permitted		
Rights:	Include			Include			Include			Include		
Min. Green:	19	19	19	19	19	19	22	22	22	22	22	22
Y+R:	4.0	4.0	4.0	4.0	4.0	4.0	4.0	4.0	4.0	4.0	4.0	4.0
Lanes:	1 0	1 0	1	1 0	0	1 0	1 0	0	1 0	1 0	0	1 0
Volume Module:												
Base Vol:	66	495	146	84	374	20	24	256	100	100	215	104
Growth Adj:	1.00	1.00	1.00	1.00	1.00	1.00	1.00	1.00	1.00	1.00	1.00	1.00
Initial Bse:	66	495	146	84	374	20	24	256	100	100	215	104
User Adj:	1.00	1.00	1.00	1.00	1.00	1.00	1.00	1.00	1.00	1.00	1.00	1.00
PHF Adj:	0.95	0.95	0.95	0.95	0.95	0.95	0.95	0.95	0.95	0.95	0.95	0.95
PHF Volume:	69	521	154	88	394	21	25	269	105	105	226	109
Reduct Vol:	0	0	0	0	0	0	0	0	0	0	0	0
Reduced Vol:	69	521	154	88	394	21	25	269	105	105	226	109
PCE Adj:	1.00	1.00	1.00	1.00	1.00	1.00	1.00	1.00	1.00	1.00	1.00	1.00
MLF Adj:	1.00	1.00	1.00	1.00	1.00	1.00	1.00	1.00	1.00	1.00	1.00	1.00
FinalVolume:	69	521	154	88	394	21	25	269	105	105	226	109
Saturation Flow Module:												
Sat/Lane:	1800	1800	1800	1800	1800	1800	1800	1800	1800	1800	1800	1800
Adjustment:	0.94	1.00	1.00	0.94	1.00	1.00	0.94	1.00	1.00	0.94	1.00	1.00
Lanes:	1.00	1.00	1.00	1.00	0.95	0.05	1.00	0.72	0.28	1.00	0.67	0.33
Final Sat.:	1700	1800	1800	1700	1709	91	1700	1294	506	1700	1213	587
Capacity Analysis Module:												
Vol/Sat:	0.04	0.29	0.09	0.05	0.23	0.23	0.01	0.21	0.21	0.06	0.19	0.19
Crit Moves:		****						****				
Green/Cycle:	0.54	0.54	0.54	0.54	0.54	0.54	0.39	0.39	0.39	0.39	0.39	0.39
Volume/Cap:	0.08	0.53	0.16	0.10	0.42	0.42	0.04	0.53	0.53	0.16	0.48	0.48
Delay/Veh:	6.6	9.4	6.9	6.7	8.4	8.4	11.3	14.9	14.9	12.0	14.2	14.2
User DelAdj:	1.00	1.00	1.00	1.00	1.00	1.00	1.00	1.00	1.00	1.00	1.00	1.00
AdjDel/Veh:	6.6	9.4	6.9	6.7	8.4	8.4	11.3	14.9	14.9	12.0	14.2	14.2
LOS by Move:	A	A	A	A	A	A	B	B	B	B	B	B
HCM2kAvgQ:	1	7	1	1	4	4	0	6	6	1	5	5

Note: Queue reported is the number of cars per lane.

Traffix 8.0.0715 (c) 2008 Dowling Assoc. Licensed to URBAN CROSSROADS, IRVINE

SANBAG CMP Monitoring - City of Rancho Cucamonga
2009 Traffic Conditions
With Existing Geometry

Level Of Service Computation Report
2000 HCM Operations Method (Base Volume Alternative)

Intersection #3 Carnelian St. (NS) / 19th St. (EW)

Cycle (sec):	80	Critical Vol./Cap.(X):	0.593
Loss Time (sec):	8	Average Delay (sec/veh):	30.0
Optimal Cycle:	80	Level Of Service:	C

Approach:	North Bound			South Bound			East Bound			West Bound		
Movement:	L	T	R	L	T	R	L	T	R	L	T	R
Control:	Protected			Protected			Protected			Protected		
Rights:		Include			Include			Include			Include	
Min. Green:	10	23	23	10	23	23	10	25	25	10	25	25
Y+R:	4.0	4.0	4.0	4.0	4.0	4.0	4.0	4.0	4.0	4.0	4.0	4.0
Lanes:	1 0	1	1 0	1 0	1	1 0	1 0	1	1 0	1 0	1	1 0
Volume Module:												
Base Vol:	77	558	68	74	678	90	194	119	122	193	248	177
Growth Adj:	1.00	1.00	1.00	1.00	1.00	1.00	1.00	1.00	1.00	1.00	1.00	1.00
Initial Bse:	77	558	68	74	678	90	194	119	122	193	248	177
User Adj:	1.00	1.00	1.00	1.00	1.00	1.00	1.00	1.00	1.00	1.00	1.00	1.00
PHF Adj:	0.95	0.95	0.95	0.95	0.95	0.95	0.95	0.95	0.95	0.95	0.95	0.95
PHF Volume:	81	587	72	78	714	95	204	125	128	203	261	186
Reduct Vol:	0	0	0	0	0	0	0	0	0	0	0	0
Reduced Vol:	81	587	72	78	714	95	204	125	128	203	261	186
PCE Adj:	1.00	1.00	1.00	1.00	1.00	1.00	1.00	1.00	1.00	1.00	1.00	1.00
MLF Adj:	1.00	1.05	1.05	1.00	1.05	1.05	1.00	1.05	1.05	1.00	1.05	1.05
FinalVolume:	81	617	75	78	749	99	204	132	135	203	274	196
Saturation Flow Module:												
Sat/Lane:	1800	1800	1800	1800	1800	1800	1800	1800	1800	1800	1800	1800
Adjustment:	0.94	1.00	1.00	0.94	1.00	1.00	0.94	1.00	1.00	0.94	1.00	1.00
Lanes:	1.00	1.78	0.22	1.00	1.77	0.23	1.00	1.00	1.00	1.00	1.17	0.83
Final Sat.:	1700	3209	391	1700	3178	422	1700	1800	1800	1700	2101	1499
Capacity Analysis Module:												
Vol/Sat:	0.05	0.19	0.19	0.05	0.24	0.24	0.12	0.07	0.07	0.12	0.13	0.13
Crit Moves:	****				****		****				****	
Green/Cycle:	0.13	0.30	0.30	0.13	0.31	0.31	0.16	0.33	0.33	0.13	0.31	0.31
Volume/Cap:	0.38	0.64	0.64	0.35	0.77	0.77	0.77	0.22	0.22	0.89	0.42	0.42
Delay/Veh:	33.3	25.5	25.5	32.6	28.5	28.5	45.2	19.2	19.2	66.6	22.0	22.0
User DelAdj:	1.00	1.00	1.00	1.00	1.00	1.00	1.00	1.00	1.00	1.00	1.00	1.00
AdjDel/Veh:	33.3	25.5	25.5	32.6	28.5	28.5	45.2	19.2	19.2	66.6	22.0	22.0
LOS by Move:	C	C	C	C	C	C	D	B	B	E	C	C
HCM2kAvgQ:	2	7	7	2	11	11	7	2	2	6	4	4

Note: Queue reported is the number of cars per lane.

Traffix 8.0.0715 (c) 2008 Dowling Assoc. Licensed to URBAN CROSSROADS, IRVINE

SANBAG CMP Monitoring - City of Rancho Cucamonga
2009 Traffic Conditions
With Existing Geometry

Level Of Service Computation Report
2000 HCM Operations Method (Base Volume Alternative)

Intersection #3 Carnelian St. (NS) / 19th St. (EW)

Cycle (sec):	80	Critical Vol./Cap.(X):	0.690
Loss Time (sec):	8	Average Delay (sec/veh):	30.1
Optimal Cycle:	80	Level Of Service:	C

Approach:	North Bound			South Bound			East Bound			West Bound		
Movement:	L	T	R	L	T	R	L	T	R	L	T	R
Control:	Protected			Protected			Protected			Protected		
Rights:	Include			Include			Include			Include		
Min. Green:	10	23	23	10	23	23	10	25	25	10	25	25
Y+R:	4.0	4.0	4.0	4.0	4.0	4.0	4.0	4.0	4.0	4.0	4.0	4.0
Lanes:	1 0	1	1 0	1 0	1	1 0	1 0	1	1 0	1 0	1	1 0
Volume Module:												
Base Vol:	113	739	93	204	709	84	128	353	121	152	219	107
Growth Adj:	1.00	1.00	1.00	1.00	1.00	1.00	1.00	1.00	1.00	1.00	1.00	1.00
Initial Bse:	113	739	93	204	709	84	128	353	121	152	219	107
User Adj:	1.00	1.00	1.00	1.00	1.00	1.00	1.00	1.00	1.00	1.00	1.00	1.00
PHF Adj:	0.95	0.95	0.95	0.95	0.95	0.95	0.95	0.95	0.95	0.95	0.95	0.95
PHF Volume:	119	778	98	215	746	88	135	372	127	160	231	113
Reduct Vol:	0	0	0	0	0	0	0	0	0	0	0	0
Reduced Vol:	119	778	98	215	746	88	135	372	127	160	231	113
PCE Adj:	1.00	1.00	1.00	1.00	1.00	1.00	1.00	1.00	1.00	1.00	1.00	1.00
MLF Adj:	1.00	1.05	1.05	1.00	1.05	1.05	1.00	1.05	1.05	1.00	1.05	1.05
FinalVolume:	119	817	103	215	784	93	135	390	134	160	242	118
Saturation Flow Module:												
Sat/Lane:	1800	1800	1800	1800	1800	1800	1800	1800	1800	1800	1800	1800
Adjustment:	0.94	1.00	1.00	0.94	1.00	1.00	0.94	1.00	1.00	0.94	1.00	1.00
Lanes:	1.00	1.78	0.22	1.00	1.79	0.21	1.00	1.49	0.51	1.00	1.34	0.66
Final Sat.:	1700	3198	402	1700	3219	381	1700	2681	919	1700	2418	1182
Capacity Analysis Module:												
Vol/Sat:	0.07	0.26	0.26	0.13	0.24	0.24	0.08	0.15	0.15	0.09	0.10	0.10
Crit Moves:		****		****				****		****		
Green/Cycle:	0.14	0.31	0.31	0.15	0.32	0.32	0.13	0.31	0.31	0.13	0.31	0.31
Volume/Cap:	0.50	0.83	0.83	0.83	0.76	0.76	0.63	0.47	0.47	0.75	0.32	0.32
Delay/Veh:	33.4	30.8	30.8	51.8	27.2	27.2	39.4	22.4	22.4	47.9	21.2	21.2
User DelAdj:	1.00	1.00	1.00	1.00	1.00	1.00	1.00	1.00	1.00	1.00	1.00	1.00
AdjDel/Veh:	33.4	30.8	30.8	51.8	27.2	27.2	39.4	22.4	22.4	47.9	21.2	21.2
LOS by Move:	C	C	C	D	C	C	D	C	C	D	C	C
HCM2kAvgQ:	3	10	10	8	11	11	5	6	6	4	3	3

Note: Queue reported is the number of cars per lane.

Traffix 8.0.0715 (c) 2008 Dowling Assoc. Licensed to URBAN CROSSROADS, IRVINE

SANBAG CMP Monitoring - City of Rancho Cucamonga
2009 Traffic Conditions
With Existing Geometry

Level Of Service Computation Report
2000 HCM Operations Method (Base Volume Alternative)

Intersection #4 Carnelian St. (NS) / Baseline Rd. (EW)

Cycle (sec):	80	Critical Vol./Cap.(X):	0.651
Loss Time (sec):	8	Average Delay (sec/veh):	28.7
Optimal Cycle:	80	Level Of Service:	C

Approach:	North Bound			South Bound			East Bound			West Bound		
Movement:	L	T	R	L	T	R	L	T	R	L	T	R
Control:	Protected			Protected			Protected			Protected		
Rights:	Include			Include			Include			Include		
Min. Green:	10	23	23	10	23	23	10	22	22	10	22	22
Y+R:	4.0	4.0	4.0	4.0	4.0	4.0	4.0	4.0	4.0	4.0	4.0	4.0
Lanes:	1 0	1	1 0	1 0	1	1 0	2 0	1	1 0	2 0	1	1 0
Volume Module:												
Base Vol:	86	500	83	237	719	108	155	398	113	305	392	236
Growth Adj:	1.00	1.00	1.00	1.00	1.00	1.00	1.00	1.00	1.00	1.00	1.00	1.00
Initial Bse:	86	500	83	237	719	108	155	398	113	305	392	236
User Adj:	1.00	1.00	1.00	1.00	1.00	1.00	1.00	1.00	1.00	1.00	1.00	1.00
PHF Adj:	0.95	0.95	0.95	0.95	0.95	0.95	0.95	0.95	0.95	0.95	0.95	0.95
PHF Volume:	91	526	87	249	757	114	163	419	119	321	413	248
Reduct Vol:	0	0	0	0	0	0	0	0	0	0	0	0
Reduced Vol:	91	526	87	249	757	114	163	419	119	321	413	248
PCE Adj:	1.00	1.00	1.00	1.00	1.00	1.00	1.00	1.00	1.00	1.00	1.00	1.00
MLF Adj:	1.00	1.05	1.05	1.00	1.05	1.05	1.03	1.05	1.05	1.03	1.05	1.05
FinalVolume:	91	553	92	249	795	119	168	440	125	331	433	261
Saturation Flow Module:												
Sat/Lane:	1800	1800	1800	1800	1800	1800	1800	1800	1800	1800	1800	1800
Adjustment:	0.94	1.00	1.00	0.94	1.00	1.00	0.89	1.00	1.00	0.89	1.00	1.00
Lanes:	1.00	1.72	0.28	1.00	1.74	0.26	2.00	1.56	0.44	2.00	1.25	0.75
Final Sat.:	1700	3087	513	1700	3130	470	3200	2804	796	3200	2247	1353
Capacity Analysis Module:												
Vol/Sat:	0.05	0.18	0.18	0.15	0.25	0.25	0.05	0.16	0.16	0.10	0.19	0.19
Crit Moves:		****		****				****		****		
Green/Cycle:	0.15	0.29	0.29	0.20	0.34	0.34	0.13	0.28	0.28	0.14	0.28	0.28
Volume/Cap:	0.36	0.62	0.62	0.74	0.75	0.75	0.41	0.57	0.57	0.74	0.68	0.68
Delay/Veh:	31.6	25.9	25.9	38.7	26.1	26.1	32.6	25.7	25.7	39.6	27.2	27.2
User DelAdj:	1.00	1.00	1.00	1.00	1.00	1.00	1.00	1.00	1.00	1.00	1.00	1.00
AdjDel/Veh:	31.6	25.9	25.9	38.7	26.1	26.1	32.6	25.7	25.7	39.6	27.2	27.2
LOS by Move:	C	C	C	D	C	C	C	C	C	D	C	C
HCM2kAvgQ:	2	7	7	6	10	10	3	7	7	5	8	8

Note: Queue reported is the number of cars per lane.

Traffix 8.0.0715 (c) 2008 Dowling Assoc. Licensed to URBAN CROSSROADS, IRVINE

SANBAG CMP Monitoring - City of Rancho Cucamonga
2009 Traffic Conditions
With Existing Geometry

Level Of Service Computation Report
2000 HCM Operations Method (Base Volume Alternative)

Intersection #4 Carnelian St. (NS) / Baseline Rd. (EW)

Cycle (sec):	80	Critical Vol./Cap.(X):	0.786
Loss Time (sec):	8	Average Delay (sec/veh):	31.9
Optimal Cycle:	80	Level Of Service:	C

Approach:	North Bound			South Bound			East Bound			West Bound		
Movement:	L	T	R	L	T	R	L	T	R	L	T	R
Control:	Protected			Protected			Protected			Protected		
Rights:	Include			Include			Include			Include		
Min. Green:	10	23	23	10	23	23	10	22	22	10	22	22
Y+R:	4.0	4.0	4.0	4.0	4.0	4.0	4.0	4.0	4.0	4.0	4.0	4.0
Lanes:	1 0 1		1 0	1 0 1		1 0	2 0 1		1 0	2 0 1		1 0
Volume Module:												
Base Vol:	150	814	98	191	795	66	324	709	70	206	420	126
Growth Adj:	1.00	1.00	1.00	1.00	1.00	1.00	1.00	1.00	1.00	1.00	1.00	1.00
Initial Bse:	150	814	98	191	795	66	324	709	70	206	420	126
User Adj:	1.00	1.00	1.00	1.00	1.00	1.00	1.00	1.00	1.00	1.00	1.00	1.00
PHF Adj:	0.95	0.95	0.95	0.95	0.95	0.95	0.95	0.95	0.95	0.95	0.95	0.95
PHF Volume:	158	857	103	201	837	69	341	746	74	217	442	133
Reduct Vol:	0	0	0	0	0	0	0	0	0	0	0	0
Reduced Vol:	158	857	103	201	837	69	341	746	74	217	442	133
PCE Adj:	1.00	1.00	1.00	1.00	1.00	1.00	1.00	1.00	1.00	1.00	1.00	1.00
MLF Adj:	1.00	1.05	1.05	1.00	1.05	1.05	1.03	1.05	1.05	1.03	1.05	1.05
FinalVolume:	158	900	108	201	879	73	351	784	77	223	464	139
Saturation Flow Module:												
Sat/Lane:	1800	1800	1800	1800	1800	1800	1800	1800	1800	1800	1800	1800
Adjustment:	0.94	1.00	1.00	0.94	1.00	1.00	0.89	1.00	1.00	0.89	1.00	1.00
Lanes:	1.00	1.79	0.21	1.00	1.85	0.15	2.00	1.82	0.18	2.00	1.54	0.46
Final Sat.:	1700	3213	387	1700	3324	276	3200	3277	323	3200	2769	831
Capacity Analysis Module:												
Vol/Sat:	0.09	0.28	0.28	0.12	0.26	0.26	0.11	0.24	0.24	0.07	0.17	0.17
Crit Moves:		****		****				****		****		
Green/Cycle:	0.15	0.34	0.34	0.14	0.34	0.34	0.13	0.29	0.29	0.13	0.29	0.29
Volume/Cap:	0.63	0.82	0.82	0.82	0.78	0.78	0.84	0.82	0.82	0.56	0.59	0.59
Delay/Veh:	37.3	28.8	28.8	52.9	27.3	27.3	48.7	31.8	31.8	34.7	25.4	25.4
User DelAdj:	1.00	1.00	1.00	1.00	1.00	1.00	1.00	1.00	1.00	1.00	1.00	1.00
AdjDel/Veh:	37.3	28.8	28.8	52.9	27.3	27.3	48.7	31.8	31.8	34.7	25.4	25.4
LOS by Move:	D	C	C	D	C	C	D	C	C	C	C	C
HCM2kAvgQ:	4	11	11	5	10	10	7	12	12	3	6	6

Note: Queue reported is the number of cars per lane.

Traffix 8.0.0715 (c) 2008 Dowling Assoc. Licensed to URBAN CROSSROADS, IRVINE

SANBAG CMP Monitoring - City of Rancho Cucamonga
2009 Traffic Conditions
With Existing Geometry

Level Of Service Computation Report
2000 HCM Operations Method (Base Volume Alternative)

Intersection #5 Vineyard Av. (NS) / Foothill Bl. (EW)

Cycle (sec): 120 Critical Vol./Cap.(X): 0.628
Loss Time (sec): 8 Average Delay (sec/veh): 34.2
Optimal Cycle: 120 Level Of Service: C

Approach:	North Bound			South Bound			East Bound			West Bound		
Movement:	L	T	R	L	T	R	L	T	R	L	T	R
Control:	Protected			Protected			Protected			Protected		
Rights:	Include			Include			Include			Include		
Min. Green:	10	39	39	10	39	39	10	28	28	10	28	28
Y+R:	4.0	4.0	4.0	4.0	4.0	4.0	4.0	4.0	4.0	4.0	4.0	4.0
Lanes:	1 0 1			1 0 2		0 1	2 0 3		0 1	2 0 2		0 1
Volume Module:												
Base Vol:	118	596	86	109	852	329	224	477	61	129	572	89
Growth Adj:	1.00	1.00	1.00	1.00	1.00	1.00	1.00	1.00	1.00	1.00	1.00	1.00
Initial Bse:	118	596	86	109	852	329	224	477	61	129	572	89
User Adj:	1.00	1.00	1.00	1.00	1.00	1.00	1.00	1.00	1.00	1.00	1.00	1.00
PHF Adj:	0.95	0.95	0.95	0.95	0.95	0.95	0.95	0.95	0.95	0.95	0.95	0.95
PHF Volume:	124	627	91	115	897	346	236	502	64	136	602	94
Reduct Vol:	0	0	0	0	0	0	0	0	0	0	0	0
Reduced Vol:	124	627	91	115	897	346	236	502	64	136	602	94
PCE Adj:	1.00	1.00	1.00	1.00	1.00	1.00	1.00	1.00	1.00	1.00	1.00	1.00
MLF Adj:	1.00	1.05	1.05	1.00	1.05	1.00	1.03	1.10	1.00	1.03	1.05	1.00
FinalVolume:	124	659	95	115	942	346	243	552	64	140	632	94
Saturation Flow Module:												
Sat/Lane:	1800	1800	1800	1800	1800	1800	1800	1800	1800	1800	1800	1800
Adjustment:	0.94	1.00	1.00	0.94	1.00	1.00	0.89	1.00	1.00	0.89	1.00	1.00
Lanes:	1.00	1.75	0.25	1.00	2.00	1.00	2.00	3.00	1.00	2.00	2.00	1.00
Final Sat.:	1700	3146	454	1700	3600	1800	3200	5400	1800	3200	3600	1800
Capacity Analysis Module:												
Vol/Sat:	0.07	0.21	0.21	0.07	0.26	0.19	0.08	0.10	0.04	0.04	0.18	0.05
Crit Moves:	****				****		****				****	
Green/Cycle:	0.12	0.42	0.42	0.11	0.42	0.42	0.12	0.30	0.30	0.11	0.28	0.28
Volume/Cap:	0.63	0.49	0.49	0.62	0.63	0.46	0.63	0.35	0.12	0.41	0.63	0.19
Delay/Veh:	56.8	25.4	25.4	57.5	28.5	25.7	53.5	33.3	31.0	51.0	39.0	33.0
User DelAdj:	1.00	1.00	1.00	1.00	1.00	1.00	1.00	1.00	1.00	1.00	1.00	1.00
AdjDel/Veh:	56.8	25.4	25.4	57.5	28.5	25.7	53.5	33.3	31.0	51.0	39.0	33.0
LOS by Move:	E	C	C	E	C	C	D	C	C	D	D	C
HCM2kAvgQ:	5	10	10	4	13	9	5	5	2	3	10	2

Note: Queue reported is the number of cars per lane.

Traffix 8.0.0715 (c) 2008 Dowling Assoc. Licensed to URBAN CROSSROADS, IRVINE

SANBAG CMP Monitoring - City of Rancho Cucamonga
2009 Traffic Conditions
With Existing Geometry

Level Of Service Computation Report
2000 HCM Operations Method (Base Volume Alternative)

Intersection #5 Vineyard Av. (NS) / Foothill Bl. (EW)

Cycle (sec):	120	Critical Vol./Cap.(X):	0.835
Loss Time (sec):	8	Average Delay (sec/veh):	43.6
Optimal Cycle:	120	Level Of Service:	D

Approach:	North Bound			South Bound			East Bound			West Bound		
Movement:	L	T	R	L	T	R	L	T	R	L	T	R
Control:	Protected			Protected			Protected			Protected		
Rights:	Include			Include			Include			Include		
Min. Green:	10	39	39	10	39	39	10	28	28	10	28	28
Y+R:	4.0	4.0	4.0	4.0	4.0	4.0	4.0	4.0	4.0	4.0	4.0	4.0
Lanes:	1 0 1			1 0 2		0 1	2 0 3		0 1	2 0 2		0 1
Volume Module:												
Base Vol:	138	738	179	180	564	200	648	1058	127	208	543	132
Growth Adj:	1.00	1.00	1.00	1.00	1.00	1.00	1.00	1.00	1.00	1.00	1.00	1.00
Initial Bse:	138	738	179	180	564	200	648	1058	127	208	543	132
User Adj:	1.00	1.00	1.00	1.00	1.00	1.00	1.00	1.00	1.00	1.00	1.00	1.00
PHF Adj:	0.95	0.95	0.95	0.95	0.95	0.95	0.95	0.95	0.95	0.95	0.95	0.95
PHF Volume:	145	777	188	189	594	211	682	1114	134	219	572	139
Reduct Vol:	0	0	0	0	0	0	0	0	0	0	0	0
Reduced Vol:	145	777	188	189	594	211	682	1114	134	219	572	139
PCE Adj:	1.00	1.00	1.00	1.00	1.00	1.00	1.00	1.00	1.00	1.00	1.00	1.00
MLF Adj:	1.00	1.05	1.05	1.00	1.05	1.00	1.03	1.10	1.00	1.03	1.05	1.00
FinalVolume:	145	816	198	189	623	211	703	1225	134	226	600	139
Saturation Flow Module:												
Sat/Lane:	1800	1800	1800	1800	1800	1800	1800	1800	1800	1800	1800	1800
Adjustment:	0.94	1.00	1.00	0.94	1.00	1.00	0.89	1.00	1.00	0.89	1.00	1.00
Lanes:	1.00	1.61	0.39	1.00	2.00	1.00	2.00	3.00	1.00	2.00	2.00	1.00
Final Sat.:	1700	2897	703	1700	3600	1800	3200	5400	1800	3200	3600	1800
Capacity Analysis Module:												
Vol/Sat:	0.09	0.28	0.28	0.11	0.17	0.12	0.22	0.23	0.07	0.07	0.17	0.08
Crit Moves:		****		****			****				****	
Green/Cycle:	0.09	0.33	0.33	0.13	0.36	0.36	0.25	0.36	0.36	0.13	0.23	0.23
Volume/Cap:	0.91	0.87	0.87	0.88	0.48	0.33	0.88	0.64	0.21	0.56	0.71	0.33
Delay/Veh:	99.5	45.1	45.1	83.5	30.3	28.4	54.8	33.0	27.1	50.9	45.3	38.7
User DelAdj:	1.00	1.00	1.00	1.00	1.00	1.00	1.00	1.00	1.00	1.00	1.00	1.00
AdjDel/Veh:	99.5	45.1	45.1	83.5	30.3	28.4	54.8	33.0	27.1	50.9	45.3	38.7
LOS by Move:	F	D	D	F	C	C	D	C	C	D	D	D
HCM2kAvgQ:	6	17	17	8	8	5	14	12	3	4	10	4

Note: Queue reported is the number of cars per lane.

Traffix 8.0.0715 (c) 2008 Dowling Assoc. Licensed to URBAN CROSSROADS, IRVINE

SANBAG CMP Monitoring - City of Rancho Cucamonga
2009 Traffic Conditions
With Existing Geometry

Level Of Service Computation Report
2000 HCM Operations Method (Base Volume Alternative)

Intersection #6 Vineyard Av. (NS) / Arrow Rte. (EW)

Cycle (sec):	80	Critical Vol./Cap.(X):	0.640
Loss Time (sec):	8	Average Delay (sec/veh):	28.7
Optimal Cycle:	80	Level Of Service:	C

Approach:	North Bound			South Bound			East Bound			West Bound		
Movement:	L	T	R	L	T	R	L	T	R	L	T	R
Control:	Protected			Protected			Protected			Protected		
Rights:	Include			Include			Include			Include		
Min. Green:	10	25	25	10	25	25	10	23	23	10	23	23
Y+R:	4.0	4.0	4.0	4.0	4.0	4.0	4.0	4.0	4.0	4.0	4.0	4.0
Lanes:	1 0	1	1 0	1 0	1	1 0	1 0	2	0 1	1 0	2	0 1
Volume Module:												
Base Vol:	55	502	105	143	964	104	104	392	83	152	345	99
Growth Adj:	1.00	1.00	1.00	1.00	1.00	1.00	1.00	1.00	1.00	1.00	1.00	1.00
Initial Bse:	55	502	105	143	964	104	104	392	83	152	345	99
User Adj:	1.00	1.00	1.00	1.00	1.00	1.00	1.00	1.00	1.00	1.00	1.00	1.00
PHF Adj:	0.95	0.95	0.95	0.95	0.95	0.95	0.95	0.95	0.95	0.95	0.95	0.95
PHF Volume:	58	528	111	151	1015	109	109	413	87	160	363	104
Reduct Vol:	0	0	0	0	0	0	0	0	0	0	0	0
Reduced Vol:	58	528	111	151	1015	109	109	413	87	160	363	104
PCE Adj:	1.00	1.00	1.00	1.00	1.00	1.00	1.00	1.00	1.00	1.00	1.00	1.00
MLF Adj:	1.00	1.05	1.05	1.00	1.05	1.05	1.00	1.05	1.00	1.00	1.05	1.00
FinalVolume:	58	555	116	151	1065	115	109	433	87	160	381	104
Saturation Flow Module:												
Sat/Lane:	1800	1800	1800	1800	1800	1800	1800	1800	1800	1800	1800	1800
Adjustment:	0.94	1.00	1.00	0.94	1.00	1.00	0.94	1.00	1.00	0.94	1.00	1.00
Lanes:	1.00	1.65	0.35	1.00	1.81	0.19	1.00	2.00	1.00	1.00	2.00	1.00
Final Sat.:	1700	2977	623	1700	3249	351	1700	3600	1800	1700	3600	1800
Capacity Analysis Module:												
Vol/Sat:	0.03	0.19	0.19	0.09	0.33	0.33	0.06	0.12	0.05	0.09	0.11	0.06
Crit Moves:	****				****			****		****		
Green/Cycle:	0.13	0.35	0.35	0.14	0.36	0.36	0.13	0.29	0.29	0.13	0.29	0.29
Volume/Cap:	0.27	0.54	0.54	0.64	0.90	0.90	0.52	0.42	0.17	0.75	0.37	0.20
Delay/Veh:	32.4	21.3	21.3	38.1	33.3	33.3	34.9	23.4	21.5	47.9	22.9	21.7
User DelAdj:	1.00	1.00	1.00	1.00	1.00	1.00	1.00	1.00	1.00	1.00	1.00	1.00
AdjDel/Veh:	32.4	21.3	21.3	38.1	33.3	33.3	34.9	23.4	21.5	47.9	22.9	21.7
LOS by Move:	C	C	C	D	C	C	C	C	C	D	C	C
HCM2kAvgQ:	2	7	7	4	15	15	3	4	2	4	4	2

Note: Queue reported is the number of cars per lane.

Traffix 8.0.0715 (c) 2008 Dowling Assoc. Licensed to URBAN CROSSROADS, IRVINE

SANBAG CMP Monitoring - City of Rancho Cucamonga
2009 Traffic Conditions
With Existing Geometry

Level Of Service Computation Report
2000 HCM Operations Method (Base Volume Alternative)

Intersection #6 Vineyard Av. (NS) / Arrow Rte. (EW)

Cycle (sec): 80 Critical Vol./Cap.(X): 0.649
Loss Time (sec): 8 Average Delay (sec/veh): 27.3
Optimal Cycle: 80 Level Of Service: C

Approach:	North Bound			South Bound			East Bound			West Bound		
Movement:	L	T	R	L	T	R	L	T	R	L	T	R
Control:	Protected			Protected			Protected			Protected		
Rights:	Include			Include			Include			Include		
Min. Green:	10	25	25	10	25	25	10	23	23	10	23	23
Y+R:	4.0	4.0	4.0	4.0	4.0	4.0	4.0	4.0	4.0	4.0	4.0	4.0
Lanes:	1 0	1	1 0	1 0	1	1 0	1 0	2	0 1	1 0	2	0 1
Volume Module:												
Base Vol:	67	896	142	106	601	104	99	379	63	135	412	190
Growth Adj:	1.00	1.00	1.00	1.00	1.00	1.00	1.00	1.00	1.00	1.00	1.00	1.00
Initial Bse:	67	896	142	106	601	104	99	379	63	135	412	190
User Adj:	1.00	1.00	1.00	1.00	1.00	1.00	1.00	1.00	1.00	1.00	1.00	1.00
PHF Adj:	0.95	0.95	0.95	0.95	0.95	0.95	0.95	0.95	0.95	0.95	0.95	0.95
PHF Volume:	71	943	149	112	633	109	104	399	66	142	434	200
Reduct Vol:	0	0	0	0	0	0	0	0	0	0	0	0
Reduced Vol:	71	943	149	112	633	109	104	399	66	142	434	200
PCE Adj:	1.00	1.00	1.00	1.00	1.00	1.00	1.00	1.00	1.00	1.00	1.00	1.00
MLF Adj:	1.00	1.05	1.05	1.00	1.05	1.05	1.00	1.05	1.00	1.00	1.05	1.00
FinalVolume:	71	990	157	112	664	115	104	419	66	142	455	200
Saturation Flow Module:												
Sat/Lane:	1800	1800	1800	1800	1800	1800	1800	1800	1800	1800	1800	1800
Adjustment:	0.94	1.00	1.00	0.94	1.00	1.00	0.94	1.00	1.00	0.94	1.00	1.00
Lanes:	1.00	1.73	0.27	1.00	1.70	0.30	1.00	2.00	1.00	1.00	2.00	1.00
Final Sat.:	1700	3108	492	1700	3069	531	1700	3600	1800	1700	3600	1800
Capacity Analysis Module:												
Vol/Sat:	0.04	0.32	0.32	0.07	0.22	0.22	0.06	0.12	0.04	0.08	0.13	0.11
Crit Moves:		****		****				****		****		
Green/Cycle:	0.14	0.36	0.36	0.13	0.35	0.35	0.13	0.29	0.29	0.13	0.29	0.29
Volume/Cap:	0.30	0.88	0.88	0.53	0.62	0.62	0.49	0.40	0.13	0.67	0.44	0.39
Delay/Veh:	31.6	31.0	31.0	35.2	22.7	22.7	34.4	23.2	21.2	41.4	23.5	23.3
User DelAdj:	1.00	1.00	1.00	1.00	1.00	1.00	1.00	1.00	1.00	1.00	1.00	1.00
AdjDel/Veh:	31.6	31.0	31.0	35.2	22.7	22.7	34.4	23.2	21.2	41.4	23.5	23.3
LOS by Move:	C	C	C	D	C	C	C	C	C	D	C	C
HCM2kAvgQ:	2	17	17	3	8	8	2	4	1	4	4	4

Note: Queue reported is the number of cars per lane.

Traffix 8.0.0715 (c) 2008 Dowling Assoc. Licensed to URBAN CROSSROADS, IRVINE

SANBAG CMP Monitoring - City of Rancho Cucamonga
2009 Traffic Conditions
With Existing Geometry

Level Of Service Computation Report
2000 HCM Operations Method (Base Volume Alternative)

Intersection #7 Archibald Av. (NS) / 19th St. (EW)

Cycle (sec):	80	Critical Vol./Cap.(X):	0.553
Loss Time (sec):	8	Average Delay (sec/veh):	26.9
Optimal Cycle:	80	Level Of Service:	C

Approach:	North Bound			South Bound			East Bound			West Bound		
Movement:	L	T	R	L	T	R	L	T	R	L	T	R
Control:	Protected			Protected			Protected			Protected		
Rights:	Include			Include			Include			Include		
Min. Green:	10	24	24	10	24	24	10	26	26	10	26	26
Y+R:	4.0	4.0	4.0	4.0	4.0	4.0	4.0	4.0	4.0	4.0	4.0	4.0
Lanes:	1 0	2 0	1	1 0	2 0	1	1 0	1 1	0	1 0	1 1	0
Volume Module:												
Base Vol:	72	556	35	93	677	164	204	177	76	74	220	168
Growth Adj:	1.00	1.00	1.00	1.00	1.00	1.00	1.00	1.00	1.00	1.00	1.00	1.00
Initial Bse:	72	556	35	93	677	164	204	177	76	74	220	168
User Adj:	1.00	1.00	1.00	1.00	1.00	1.00	1.00	1.00	1.00	1.00	1.00	1.00
PHF Adj:	0.95	0.95	0.95	0.95	0.95	0.95	0.95	0.95	0.95	0.95	0.95	0.95
PHF Volume:	76	585	37	98	713	173	215	186	80	78	232	177
Reduct Vol:	0	0	0	0	0	0	0	0	0	0	0	0
Reduced Vol:	76	585	37	98	713	173	215	186	80	78	232	177
PCE Adj:	1.00	1.00	1.00	1.00	1.00	1.00	1.00	1.00	1.00	1.00	1.00	1.00
MLF Adj:	1.00	1.05	1.00	1.00	1.05	1.00	1.00	1.05	1.05	1.00	1.05	1.05
FinalVolume:	76	615	37	98	748	173	215	196	84	78	243	186
Saturation Flow Module:												
Sat/Lane:	1800	1800	1800	1800	1800	1800	1800	1800	1800	1800	1800	1800
Adjustment:	0.94	1.00	1.00	0.94	1.00	1.00	0.94	1.00	1.00	0.94	1.00	1.00
Lanes:	1.00	2.00	1.00	1.00	2.00	1.00	1.00	1.40	0.60	1.00	1.13	0.87
Final Sat.:	1700	3600	1800	1700	3600	1800	1700	2519	1081	1700	2041	1559
Capacity Analysis Module:												
Vol/Sat:	0.04	0.17	0.02	0.06	0.21	0.10	0.13	0.08	0.08	0.05	0.12	0.12
Crit Moves:	****				****		****				****	
Green/Cycle:	0.13	0.30	0.30	0.13	0.30	0.30	0.15	0.34	0.34	0.13	0.33	0.33
Volume/Cap:	0.36	0.57	0.07	0.46	0.69	0.32	0.84	0.23	0.23	0.35	0.37	0.37
Delay/Veh:	33.1	24.4	20.1	34.1	26.7	22.0	54.7	18.8	18.8	32.5	20.9	20.9
User DelAdj:	1.00	1.00	1.00	1.00	1.00	1.00	1.00	1.00	1.00	1.00	1.00	1.00
AdjDel/Veh:	33.1	24.4	20.1	34.1	26.7	22.0	54.7	18.8	18.8	32.5	20.9	20.9
LOS by Move:	C	C	C	C	C	C	D	B	B	C	C	C
HCM2kAvgQ:	2	6	1	3	9	3	6	2	2	2	4	4

Note: Queue reported is the number of cars per lane.

Traffix 8.0.0715 (c) 2008 Dowling Assoc. Licensed to URBAN CROSSROADS, IRVINE

SANBAG CMP Monitoring - City of Rancho Cucamonga
2009 Traffic Conditions
With Existing Geometry

Level Of Service Computation Report
2000 HCM Operations Method (Base Volume Alternative)

Intersection #7 Archibald Av. (NS) / 19th St. (EW)

Cycle (sec):	80	Critical Vol./Cap.(X):	0.634
Loss Time (sec):	8	Average Delay (sec/veh):	28.1
Optimal Cycle:	80	Level Of Service:	C

Approach:	North Bound			South Bound			East Bound			West Bound		
Movement:	L	T	R	L	T	R	L	T	R	L	T	R
Control:	Protected			Protected			Protected			Protected		
Rights:	Include			Include			Include			Include		
Min. Green:	10	24	24	10	24	24	10	26	26	10	26	26
Y+R:	4.0	4.0	4.0	4.0	4.0	4.0	4.0	4.0	4.0	4.0	4.0	4.0
Lanes:	1 0	2 0	1	1 0	2 0	1	1 0	1 1	0	1 0	1 1	0
Volume Module:												
Base Vol:	112	813	80	150	625	156	183	293	96	89	247	126
Growth Adj:	1.00	1.00	1.00	1.00	1.00	1.00	1.00	1.00	1.00	1.00	1.00	1.00
Initial Bse:	112	813	80	150	625	156	183	293	96	89	247	126
User Adj:	1.00	1.00	1.00	1.00	1.00	1.00	1.00	1.00	1.00	1.00	1.00	1.00
PHF Adj:	0.95	0.95	0.95	0.95	0.95	0.95	0.95	0.95	0.95	0.95	0.95	0.95
PHF Volume:	118	856	84	158	658	164	193	308	101	94	260	133
Reduct Vol:	0	0	0	0	0	0	0	0	0	0	0	0
Reduced Vol:	118	856	84	158	658	164	193	308	101	94	260	133
PCE Adj:	1.00	1.00	1.00	1.00	1.00	1.00	1.00	1.00	1.00	1.00	1.00	1.00
MLF Adj:	1.00	1.05	1.00	1.00	1.05	1.00	1.00	1.05	1.05	1.00	1.05	1.05
FinalVolume:	118	899	84	158	691	164	193	324	106	94	273	139
Saturation Flow Module:												
Sat/Lane:	1800	1800	1800	1800	1800	1800	1800	1800	1800	1800	1800	1800
Adjustment:	0.94	1.00	1.00	0.94	1.00	1.00	0.94	1.00	1.00	0.94	1.00	1.00
Lanes:	1.00	2.00	1.00	1.00	2.00	1.00	1.00	1.51	0.49	1.00	1.32	0.68
Final Sat.:	1700	3600	1800	1700	3600	1800	1700	2712	888	1700	2384	1216
Capacity Analysis Module:												
Vol/Sat:	0.07	0.25	0.05	0.09	0.19	0.09	0.11	0.12	0.12	0.06	0.11	0.11
Crit Moves:		****		****			****				****	
Green/Cycle:	0.13	0.31	0.31	0.13	0.31	0.31	0.14	0.34	0.34	0.13	0.33	0.33
Volume/Cap:	0.54	0.81	0.15	0.74	0.63	0.30	0.81	0.36	0.36	0.43	0.35	0.35
Delay/Veh:	35.5	29.8	20.1	47.0	24.9	21.5	51.3	20.2	20.2	33.4	20.8	20.8
User DelAdj:	1.00	1.00	1.00	1.00	1.00	1.00	1.00	1.00	1.00	1.00	1.00	1.00
AdjDel/Veh:	35.5	29.8	20.1	47.0	24.9	21.5	51.3	20.2	20.2	33.4	20.8	20.8
LOS by Move:	D	C	C	D	C	C	D	C	C	C	C	C
HCM2kAvgQ:	3	10	1	6	8	3	5	4	4	3	4	4

Note: Queue reported is the number of cars per lane.

Traffix 8.0.0715 (c) 2008 Dowling Assoc. Licensed to URBAN CROSSROADS, IRVINE

SANBAG CMP Monitoring - City of Rancho Cucamonga
2009 Traffic Conditions
With Existing Geometry

Level Of Service Computation Report
2000 HCM Operations Method (Base Volume Alternative)

Intersection #8 Archibald Av. (NS) / Baseline Rd. (EW)

Cycle (sec):	90	Critical Vol./Cap.(X):	0.517
Loss Time (sec):	8	Average Delay (sec/veh):	26.5
Optimal Cycle:	90	Level Of Service:	C

Approach:	North Bound			South Bound			East Bound			West Bound		
Movement:	L	T	R	L	T	R	L	T	R	L	T	R
Control:	Protected			Protected			Protected			Protected		
Rights:	Ovl			Include			Ovl			Include		
Min. Green:	10	28	28	10	28	28	10	27	27	10	27	27
Y+R:	4.0	4.0	4.0	4.0	4.0	4.0	4.0	4.0	4.0	4.0	4.0	4.0
Lanes:	1 0	2 0	1	1 0	2 0	1	1 0	2 0	1	1 0	2 0	1
Volume Module:												
Base Vol:	68	936	127	66	917	63	61	220	144	122	165	89
Growth Adj:	1.00	1.00	1.00	1.00	1.00	1.00	1.00	1.00	1.00	1.00	1.00	1.00
Initial Bse:	68	936	127	66	917	63	61	220	144	122	165	89
User Adj:	1.00	1.00	1.00	1.00	1.00	1.00	1.00	1.00	1.00	1.00	1.00	1.00
PHF Adj:	0.95	0.95	0.95	0.95	0.95	0.95	0.95	0.95	0.95	0.95	0.95	0.95
PHF Volume:	72	985	134	69	965	66	64	232	152	128	174	94
Reduct Vol:	0	0	0	0	0	0	0	0	0	0	0	0
Reduced Vol:	72	985	134	69	965	66	64	232	152	128	174	94
PCE Adj:	1.00	1.00	1.00	1.00	1.00	1.00	1.00	1.00	1.00	1.00	1.00	1.00
MLF Adj:	1.00	1.05	1.00	1.00	1.05	1.00	1.00	1.05	1.00	1.00	1.05	1.00
FinalVolume:	72	1035	134	69	1014	66	64	243	152	128	182	94
Saturation Flow Module:												
Sat/Lane:	1800	1800	1800	1800	1800	1800	1800	1800	1800	1800	1800	1800
Adjustment:	0.94	1.00	1.00	0.94	1.00	1.00	0.94	1.00	1.00	0.94	1.00	1.00
Lanes:	1.00	2.00	1.00	1.00	2.00	1.00	1.00	2.00	1.00	1.00	2.00	1.00
Final Sat.:	1700	3600	1800	1700	3600	1800	1700	3600	1800	1700	3600	1800
Capacity Analysis Module:												
Vol/Sat:	0.04	0.29	0.07	0.04	0.28	0.04	0.04	0.07	0.08	0.08	0.05	0.05
Crit Moves:		****		****				****		****		
Green/Cycle:	0.13	0.39	0.50	0.11	0.37	0.37	0.11	0.30	0.43	0.11	0.30	0.30
Volume/Cap:	0.32	0.74	0.15	0.37	0.76	0.10	0.34	0.23	0.20	0.68	0.17	0.17
Delay/Veh:	36.3	25.7	12.2	38.3	27.7	18.7	38.0	23.8	16.0	48.1	23.3	23.4
User DelAdj:	1.00	1.00	1.00	1.00	1.00	1.00	1.00	1.00	1.00	1.00	1.00	1.00
AdjDel/Veh:	36.3	25.7	12.2	38.3	27.7	18.7	38.0	23.8	16.0	48.1	23.3	23.4
LOS by Move:	D	C	B	D	C	B	D	C	B	D	C	C
HCM2kAvgQ:	2	12	2	2	12	1	2	2	2	4	2	2

Note: Queue reported is the number of cars per lane.

Traffix 8.0.0715 (c) 2008 Dowling Assoc. Licensed to URBAN CROSSROADS, IRVINE

SANBAG CMP Monitoring - City of Rancho Cucamonga
2009 Traffic Conditions
With Existing Geometry

Level Of Service Computation Report
2000 HCM Operations Method (Base Volume Alternative)

Intersection #8 Archibald Av. (NS) / Baseline Rd. (EW)

Cycle (sec):	90	Critical Vol./Cap.(X):	0.697
Loss Time (sec):	8	Average Delay (sec/veh):	34.0
Optimal Cycle:	90	Level Of Service:	C

Approach:	North Bound			South Bound			East Bound			West Bound		
Movement:	L	T	R	L	T	R	L	T	R	L	T	R
Control:	Protected			Protected			Protected			Protected		
Rights:	Ovl			Include			Ovl			Include		
Min. Green:	10	28	28	10	28	28	10	27	27	10	27	27
Y+R:	4.0	4.0	4.0	4.0	4.0	4.0	4.0	4.0	4.0	4.0	4.0	4.0
Lanes:	1 0 2	0	1	1 0 2	0	1	1 0 2	0	1	1 0 2	0	1
Volume Module:												
Base Vol:	128	983	86	122	1071	83	58	339	85	199	368	103
Growth Adj:	1.00	1.00	1.00	1.00	1.00	1.00	1.00	1.00	1.00	1.00	1.00	1.00
Initial Bse:	128	983	86	122	1071	83	58	339	85	199	368	103
User Adj:	1.00	1.00	1.00	1.00	1.00	1.00	1.00	1.00	1.00	1.00	1.00	1.00
PHF Adj:	0.95	0.95	0.95	0.95	0.95	0.95	0.95	0.95	0.95	0.95	0.95	0.95
PHF Volume:	135	1035	91	128	1127	87	61	357	89	209	387	108
Reduct Vol:	0	0	0	0	0	0	0	0	0	0	0	0
Reduced Vol:	135	1035	91	128	1127	87	61	357	89	209	387	108
PCE Adj:	1.00	1.00	1.00	1.00	1.00	1.00	1.00	1.00	1.00	1.00	1.00	1.00
MLF Adj:	1.00	1.05	1.00	1.00	1.05	1.00	1.00	1.05	1.00	1.00	1.05	1.00
FinalVolume:	135	1086	91	128	1184	87	61	375	89	209	407	108
Saturation Flow Module:												
Sat/Lane:	1800	1800	1800	1800	1800	1800	1800	1800	1800	1800	1800	1800
Adjustment:	0.94	1.00	1.00	0.94	1.00	1.00	0.94	1.00	1.00	0.94	1.00	1.00
Lanes:	1.00	2.00	1.00	1.00	2.00	1.00	1.00	2.00	1.00	1.00	2.00	1.00
Final Sat.:	1700	3600	1800	1700	3600	1800	1700	3600	1800	1700	3600	1800
Capacity Analysis Module:												
Vol/Sat:	0.08	0.30	0.05	0.08	0.33	0.05	0.04	0.10	0.05	0.12	0.11	0.06
Crit Moves:	****				****			****		****		
Green/Cycle:	0.11	0.35	0.49	0.12	0.36	0.36	0.12	0.30	0.41	0.14	0.32	0.32
Volume/Cap:	0.71	0.86	0.10	0.60	0.90	0.13	0.30	0.35	0.12	0.90	0.35	0.19
Delay/Veh:	50.7	33.6	12.6	42.2	36.2	19.2	37.2	24.8	16.5	72.8	23.8	22.4
User DelAdj:	1.00	1.00	1.00	1.00	1.00	1.00	1.00	1.00	1.00	1.00	1.00	1.00
AdjDel/Veh:	50.7	33.6	12.6	42.2	36.2	19.2	37.2	24.8	16.5	72.8	23.8	22.4
LOS by Move:	D	C	B	D	D	B	D	C	B	E	C	C
HCM2kAvgQ:	4	14	1	4	17	2	2	4	1	7	4	2

Note: Queue reported is the number of cars per lane.

Traffix 8.0.0715 (c) 2008 Dowling Assoc. Licensed to URBAN CROSSROADS, IRVINE

SANBAG CMP Monitoring - City of Rancho Cucamonga
2009 Traffic Conditions
With Existing Geometry

Level Of Service Computation Report
2000 HCM Operations Method (Base Volume Alternative)

Intersection #9 Archibald Av. (NS) / Foothill Bl. (EW)

Cycle (sec):	90	Critical Vol./Cap.(X):	0.592
Loss Time (sec):	8	Average Delay (sec/veh):	26.8
Optimal Cycle:	90	Level Of Service:	C

Approach:	North Bound			South Bound			East Bound			West Bound		
Movement:	L	T	R	L	T	R	L	T	R	L	T	R
Control:	Protected			Protected			Protected			Protected		
Rights:	Include			Include			Include			Include		
Min. Green:	10	33	33	10	33	33	10	26	26	10	26	26
Y+R:	4.0	4.0	4.0	4.0	4.0	4.0	4.0	4.0	4.0	4.0	4.0	4.0
Lanes:	1 0	1	1 0	1 0	2	0 1	2 0	2	0 1	2 0	2	0 1
Volume Module:												
Base Vol:	73	407	85	86	836	142	173	541	76	211	545	96
Growth Adj:	1.00	1.00	1.00	1.00	1.00	1.00	1.00	1.00	1.00	1.00	1.00	1.00
Initial Bse:	73	407	85	86	836	142	173	541	76	211	545	96
User Adj:	1.00	1.00	1.00	1.00	1.00	1.00	1.00	1.00	1.00	1.00	1.00	1.00
PHF Adj:	0.95	0.95	0.95	0.95	0.95	0.95	0.95	0.95	0.95	0.95	0.95	0.95
PHF Volume:	77	428	89	91	880	149	182	569	80	222	574	101
Reduct Vol:	0	0	0	0	0	0	0	0	0	0	0	0
Reduced Vol:	77	428	89	91	880	149	182	569	80	222	574	101
PCE Adj:	1.00	1.00	1.00	1.00	1.00	1.00	1.00	1.00	1.00	1.00	1.00	1.00
MLF Adj:	1.00	1.05	1.05	1.00	1.05	1.00	1.03	1.05	1.00	1.03	1.05	1.00
FinalVolume:	77	450	94	91	924	149	188	598	80	229	602	101
Saturation Flow Module:												
Sat/Lane:	1800	1800	1800	1800	1800	1800	1800	1800	1800	1800	1800	1800
Adjustment:	0.94	1.00	1.00	0.94	1.00	1.00	0.89	1.00	1.00	0.89	1.00	1.00
Lanes:	1.00	1.65	0.35	1.00	2.00	1.00	2.00	2.00	1.00	2.00	2.00	1.00
Final Sat.:	1700	2978	622	1700	3600	1800	3200	3600	1800	3200	3600	1800
Capacity Analysis Module:												
Vol/Sat:	0.05	0.15	0.15	0.05	0.26	0.08	0.06	0.17	0.04	0.07	0.17	0.06
Crit Moves:	****				****			****		****		
Green/Cycle:	0.11	0.39	0.39	0.12	0.40	0.40	0.11	0.29	0.29	0.11	0.29	0.29
Volume/Cap:	0.41	0.39	0.39	0.45	0.64	0.21	0.53	0.57	0.15	0.64	0.58	0.19
Delay/Veh:	38.7	19.8	19.8	38.5	22.8	17.8	39.2	28.1	24.0	42.2	28.1	24.3
User DelAdj:	1.00	1.00	1.00	1.00	1.00	1.00	1.00	1.00	1.00	1.00	1.00	1.00
AdjDel/Veh:	38.7	19.8	19.8	38.5	22.8	17.8	39.2	28.1	24.0	42.2	28.1	24.3
LOS by Move:	D	B	B	D	C	B	D	C	C	D	C	C
HCM2kAvgQ:	2	5	5	2	10	3	3	7	2	4	7	2

Note: Queue reported is the number of cars per lane.

Traffix 8.0.0715 (c) 2008 Dowling Assoc. Licensed to URBAN CROSSROADS, IRVINE

SANBAG CMP Monitoring - City of Rancho Cucamonga
2009 Traffic Conditions
With Existing Geometry

Level Of Service Computation Report
2000 HCM Operations Method (Base Volume Alternative)

Intersection #9 Archibald Av. (NS) / Foothill Bl. (EW)

Cycle (sec):	90	Critical Vol./Cap.(X):	0.800
Loss Time (sec):	8	Average Delay (sec/veh):	32.4
Optimal Cycle:	90	Level Of Service:	C

Approach:	North Bound			South Bound			East Bound			West Bound		
Movement:	L	T	R	L	T	R	L	T	R	L	T	R
Control:	Protected			Protected			Protected			Protected		
Rights:	Include			Include			Include			Include		
Min. Green:	10	33	33	10	33	33	10	26	26	10	26	26
Y+R:	4.0	4.0	4.0	4.0	4.0	4.0	4.0	4.0	4.0	4.0	4.0	4.0
Lanes:	1 0	1	1 0	1 0	2	0 1	2 0	2	0 1	2 0	2	0 1
Volume Module:												
Base Vol:	89	816	147	129	528	158	297	895	83	232	746	152
Growth Adj:	1.00	1.00	1.00	1.00	1.00	1.00	1.00	1.00	1.00	1.00	1.00	1.00
Initial Bse:	89	816	147	129	528	158	297	895	83	232	746	152
User Adj:	1.00	1.00	1.00	1.00	1.00	1.00	1.00	1.00	1.00	1.00	1.00	1.00
PHF Adj:	0.95	0.95	0.95	0.95	0.95	0.95	0.95	0.95	0.95	0.95	0.95	0.95
PHF Volume:	94	859	155	136	556	166	313	942	87	244	785	160
Reduct Vol:	0	0	0	0	0	0	0	0	0	0	0	0
Reduced Vol:	94	859	155	136	556	166	313	942	87	244	785	160
PCE Adj:	1.00	1.00	1.00	1.00	1.00	1.00	1.00	1.00	1.00	1.00	1.00	1.00
MLF Adj:	1.00	1.05	1.05	1.00	1.05	1.00	1.03	1.05	1.00	1.03	1.05	1.00
FinalVolume:	94	902	162	136	584	166	322	989	87	252	825	160
Saturation Flow Module:												
Sat/Lane:	1800	1800	1800	1800	1800	1800	1800	1800	1800	1800	1800	1800
Adjustment:	0.94	1.00	1.00	0.94	1.00	1.00	0.89	1.00	1.00	0.89	1.00	1.00
Lanes:	1.00	1.69	0.31	1.00	2.00	1.00	2.00	2.00	1.00	2.00	2.00	1.00
Final Sat.:	1700	3050	550	1700	3600	1800	3200	3600	1800	3200	3600	1800
Capacity Analysis Module:												
Vol/Sat:	0.06	0.30	0.30	0.08	0.16	0.09	0.10	0.27	0.05	0.08	0.23	0.09
Crit Moves:		****		****				****		****		
Green/Cycle:	0.11	0.37	0.37	0.11	0.37	0.37	0.12	0.32	0.32	0.11	0.31	0.31
Volume/Cap:	0.50	0.81	0.81	0.72	0.44	0.25	0.84	0.85	0.15	0.71	0.73	0.28
Delay/Veh:	39.7	29.4	29.4	51.2	21.8	20.1	53.4	34.8	21.8	45.0	30.0	23.6
User DelAdj:	1.00	1.00	1.00	1.00	1.00	1.00	1.00	1.00	1.00	1.00	1.00	1.00
AdjDel/Veh:	39.7	29.4	29.4	51.2	21.8	20.1	53.4	34.8	21.8	45.0	30.0	23.6
LOS by Move:	D	C	C	D	C	C	D	C	C	D	C	C
HCM2kAvgQ:	2	13	13	4	6	3	5	13	2	4	10	3

Note: Queue reported is the number of cars per lane.

Traffix 8.0.0715 (c) 2008 Dowling Assoc. Licensed to URBAN CROSSROADS, IRVINE

SANBAG CMP Monitoring - City of Rancho Cucamonga
2009 Traffic Conditions
With Existing Geometry

Level Of Service Computation Report
2000 HCM Operations Method (Base Volume Alternative)

Intersection #10 Archibald Av. (NS) / Arrow Rte. (EW)

Cycle (sec):	80	Critical Vol./Cap.(X):	0.688
Loss Time (sec):	8	Average Delay (sec/veh):	31.1
Optimal Cycle:	80	Level Of Service:	C

Approach:	North Bound			South Bound			East Bound			West Bound		
Movement:	L	T	R	L	T	R	L	T	R	L	T	R
Control:	Protected			Protected			Protected			Protected		
Rights:	Include			Include			Include			Include		
Min. Green:	10	24	24	10	24	24	10	25	25	10	25	25
Y+R:	4.0	4.0	4.0	4.0	4.0	4.0	4.0	4.0	4.0	4.0	4.0	4.0
Lanes:	1 0	2 0	1	1 0	1 1	0	1 0	1 1	0	1 0	1 1	0
Volume Module:												
Base Vol:	69	438	199	100	854	88	43	431	67	217	436	79
Growth Adj:	1.00	1.00	1.00	1.00	1.00	1.00	1.00	1.00	1.00	1.00	1.00	1.00
Initial Bse:	69	438	199	100	854	88	43	431	67	217	436	79
User Adj:	1.00	1.00	1.00	1.00	1.00	1.00	1.00	1.00	1.00	1.00	1.00	1.00
PHF Adj:	0.95	0.95	0.95	0.95	0.95	0.95	0.95	0.95	0.95	0.95	0.95	0.95
PHF Volume:	73	461	209	105	899	93	45	454	71	228	459	83
Reduct Vol:	0	0	0	0	0	0	0	0	0	0	0	0
Reduced Vol:	73	461	209	105	899	93	45	454	71	228	459	83
PCE Adj:	1.00	1.00	1.00	1.00	1.00	1.00	1.00	1.00	1.00	1.00	1.00	1.00
MLF Adj:	1.00	1.05	1.00	1.00	1.05	1.05	1.00	1.05	1.05	1.00	1.05	1.05
FinalVolume:	73	484	209	105	944	97	45	476	74	228	482	87
Saturation Flow Module:												
Sat/Lane:	1800	1800	1800	1800	1800	1800	1800	1800	1800	1800	1800	1800
Adjustment:	0.94	1.00	1.00	0.94	1.00	1.00	0.94	1.00	1.00	0.94	1.00	1.00
Lanes:	1.00	2.00	1.00	1.00	1.81	0.19	1.00	1.73	0.27	1.00	1.69	0.31
Final Sat.:	1700	3600	1800	1700	3264	336	1700	3116	484	1700	3048	552
Capacity Analysis Module:												
Vol/Sat:	0.04	0.13	0.12	0.06	0.29	0.29	0.03	0.15	0.15	0.13	0.16	0.16
Crit Moves:	****				****			****		****		
Green/Cycle:	0.13	0.31	0.31	0.13	0.32	0.32	0.13	0.31	0.31	0.15	0.33	0.33
Volume/Cap:	0.34	0.43	0.37	0.48	0.92	0.92	0.20	0.49	0.49	0.92	0.48	0.48
Delay/Veh:	33.0	22.2	21.9	33.9	37.8	37.8	31.5	22.7	22.7	68.9	21.8	21.8
User DelAdj:	1.00	1.00	1.00	1.00	1.00	1.00	1.00	1.00	1.00	1.00	1.00	1.00
AdjDel/Veh:	33.0	22.2	21.9	33.9	37.8	37.8	31.5	22.7	22.7	68.9	21.8	21.8
LOS by Move:	C	C	C	C	D	D	C	C	C	E	C	C
HCM2kAvgQ:	2	4	4	2	14	14	1	5	5	7	5	5

Note: Queue reported is the number of cars per lane.

Traffix 8.0.0715 (c) 2008 Dowling Assoc. Licensed to URBAN CROSSROADS, IRVINE

SANBAG CMP Monitoring - City of Rancho Cucamonga
2009 Traffic Conditions
With Existing Geometry

Level Of Service Computation Report
2000 HCM Operations Method (Base Volume Alternative)

Intersection #10 Archibald Av. (NS) / Arrow Rte. (EW)

Cycle (sec): 80 Critical Vol./Cap.(X): 0.763
Loss Time (sec): 8 Average Delay (sec/veh): 29.5
Optimal Cycle: 80 Level Of Service: C

Approach:	North Bound			South Bound			East Bound			West Bound		
Movement:	L	T	R	L	T	R	L	T	R	L	T	R
Control:	Protected			Protected			Protected			Protected		
Rights:	Include			Include			Include			Include		
Min. Green:	10	24	24	10	24	24	10	25	25	10	25	25
Y+R:	4.0	4.0	4.0	4.0	4.0	4.0	4.0	4.0	4.0	4.0	4.0	4.0
Lanes:	1 0	2	0 1	1 0	1	1 0	1 0	1	1 0	1 0	1	1 0
Volume Module:												
Base Vol:	83	932	245	120	592	50	105	611	69	190	571	155
Growth Adj:	1.00	1.00	1.00	1.00	1.00	1.00	1.00	1.00	1.00	1.00	1.00	1.00
Initial Bse:	83	932	245	120	592	50	105	611	69	190	571	155
User Adj:	1.00	1.00	1.00	1.00	1.00	1.00	1.00	1.00	1.00	1.00	1.00	1.00
PHF Adj:	0.95	0.95	0.95	0.95	0.95	0.95	0.95	0.95	0.95	0.95	0.95	0.95
PHF Volume:	87	981	258	126	623	53	111	643	73	200	601	163
Reduct Vol:	0	0	0	0	0	0	0	0	0	0	0	0
Reduced Vol:	87	981	258	126	623	53	111	643	73	200	601	163
PCE Adj:	1.00	1.00	1.00	1.00	1.00	1.00	1.00	1.00	1.00	1.00	1.00	1.00
MLF Adj:	1.00	1.05	1.00	1.00	1.05	1.05	1.00	1.05	1.05	1.00	1.05	1.05
FinalVolume:	87	1030	258	126	654	55	111	675	76	200	631	171
Saturation Flow Module:												
Sat/Lane:	1800	1800	1800	1800	1800	1800	1800	1800	1800	1800	1800	1800
Adjustment:	0.94	1.00	1.00	0.94	1.00	1.00	0.94	1.00	1.00	0.94	1.00	1.00
Lanes:	1.00	2.00	1.00	1.00	1.84	0.16	1.00	1.80	0.20	1.00	1.57	0.43
Final Sat.:	1700	3600	1800	1700	3320	280	1700	3235	365	1700	2831	769
Capacity Analysis Module:												
Vol/Sat:	0.05	0.29	0.14	0.07	0.20	0.20	0.07	0.21	0.21	0.12	0.22	0.22
Crit Moves:		****		****				****		****		
Green/Cycle:	0.13	0.33	0.33	0.13	0.32	0.32	0.13	0.31	0.31	0.13	0.32	0.32
Volume/Cap:	0.39	0.87	0.44	0.59	0.62	0.62	0.51	0.67	0.67	0.87	0.70	0.70
Delay/Veh:	32.8	32.7	21.6	37.6	24.1	24.1	34.5	25.5	25.5	62.6	25.7	25.7
User DelAdj:	1.00	1.00	1.00	1.00	1.00	1.00	1.00	1.00	1.00	1.00	1.00	1.00
AdjDel/Veh:	32.8	32.7	21.6	37.6	24.1	24.1	34.5	25.5	25.5	62.6	25.7	25.7
LOS by Move:	C	C	C	D	C	C	C	C	C	E	C	C
HCM2kAvgQ:	2	12	5	3	7	7	3	8	8	6	8	8

Note: Queue reported is the number of cars per lane.

Traffix 8.0.0715 (c) 2008 Dowling Assoc. Licensed to URBAN CROSSROADS, IRVINE

SANBAG CMP Monitoring - City of Rancho Cucamonga
2009 Traffic Conditions
With Existing Geometry

Level Of Service Computation Report
2000 HCM Operations Method (Base Volume Alternative)

Intersection #11 Archibald Av. (NS) / 4th St. (EW)

Cycle (sec):	100	Critical Vol./Cap.(X):	0.566
Loss Time (sec):	8	Average Delay (sec/veh):	29.4
Optimal Cycle:	100	Level Of Service:	C

Approach:	North Bound			South Bound			East Bound			West Bound		
Movement:	L	T	R	L	T	R	L	T	R	L	T	R
Control:	Protected			Protected			Protected			Protected		
Rights:	Include			Ovl			Include			Ovl		
Min. Green:	10	34	34	10	34	34	10	32	32	10	32	32
Y+R:	4.0	4.0	4.0	4.0	4.0	4.0	4.0	4.0	4.0	4.0	4.0	4.0
Lanes:	1 0	1	1 0	1 0	2	0 1	2 0	1	1 0	2 0	3	0 1
Volume Module:												
Base Vol:	68	936	127	66	917	63	61	220	144	122	165	89
Growth Adj:	1.00	1.00	1.00	1.00	1.00	1.00	1.00	1.00	1.00	1.00	1.00	1.00
Initial Bse:	68	936	127	66	917	63	61	220	144	122	165	89
User Adj:	1.00	1.00	1.00	1.00	1.00	1.00	1.00	1.00	1.00	1.00	1.00	1.00
PHF Adj:	0.95	0.95	0.95	0.95	0.95	0.95	0.95	0.95	0.95	0.95	0.95	0.95
PHF Volume:	72	985	134	69	965	66	64	232	152	128	174	94
Reduct Vol:	0	0	0	0	0	0	0	0	0	0	0	0
Reduced Vol:	72	985	134	69	965	66	64	232	152	128	174	94
PCE Adj:	1.00	1.00	1.00	1.00	1.00	1.00	1.00	1.00	1.00	1.00	1.00	1.00
MLF Adj:	1.00	1.05	1.05	1.00	1.05	1.00	1.03	1.05	1.05	1.03	1.10	1.00
FinalVolume:	72	1035	140	69	1014	66	66	243	159	132	191	94
Saturation Flow Module:												
Sat/Lane:	1800	1800	1800	1800	1800	1800	1800	1800	1800	1800	1800	1800
Adjustment:	0.94	1.00	1.00	0.94	1.00	1.00	0.89	1.00	1.00	0.89	1.00	1.00
Lanes:	1.00	1.76	0.24	1.00	2.00	1.00	2.00	1.21	0.79	2.00	3.00	1.00
Final Sat.:	1700	3170	430	1700	3600	1800	3200	2176	1424	3200	5400	1800
Capacity Analysis Module:												
Vol/Sat:	0.04	0.33	0.33	0.04	0.28	0.04	0.02	0.11	0.11	0.04	0.04	0.05
Crit Moves:		****		****				****		****		
Green/Cycle:	0.11	0.40	0.40	0.10	0.39	0.49	0.10	0.32	0.32	0.10	0.32	0.42
Volume/Cap:	0.37	0.82	0.82	0.41	0.73	0.08	0.21	0.35	0.35	0.41	0.11	0.12
Delay/Veh:	42.2	30.5	30.5	43.8	28.2	13.7	41.7	26.2	26.2	43.1	24.0	17.8
User DelAdj:	1.00	1.00	1.00	1.00	1.00	1.00	1.00	1.00	1.00	1.00	1.00	1.00
AdjDel/Veh:	42.2	30.5	30.5	43.8	28.2	13.7	41.7	26.2	26.2	43.1	24.0	17.8
LOS by Move:	D	C	C	D	C	B	D	C	C	D	C	B
HCM2kAvgQ:	3	18	18	2	12	1	1	5	5	3	1	2

Note: Queue reported is the number of cars per lane.

Traffix 8.0.0715 (c) 2008 Dowling Assoc. Licensed to URBAN CROSSROADS, IRVINE

SANBAG CMP Monitoring - City of Rancho Cucamonga
2009 Traffic Conditions
With Existing Geometry

Level Of Service Computation Report
2000 HCM Operations Method (Base Volume Alternative)

Intersection #11 Archibald Av. (NS) / 4th St. (EW)

Cycle (sec): 100 Critical Vol./Cap.(X): 0.658
Loss Time (sec): 8 Average Delay (sec/veh): 32.7
Optimal Cycle: 100 Level Of Service: C

Approach:	North Bound			South Bound			East Bound			West Bound		
Movement:	L	T	R	L	T	R	L	T	R	L	T	R
Control:	Protected			Protected			Protected			Protected		
Rights:	Include			Ovl			Include			Ovl		
Min. Green:	10	34	34	10	34	34	10	32	32	10	32	32
Y+R:	4.0	4.0	4.0	4.0	4.0	4.0	4.0	4.0	4.0	4.0	4.0	4.0
Lanes:	1 0	1	1 0	1 0	2	0 1	2 0	1	1 0	2 0	3	0 1
Volume Module:												
Base Vol:	128	983	86	122	1071	83	58	339	85	199	368	103
Growth Adj:	1.00	1.00	1.00	1.00	1.00	1.00	1.00	1.00	1.00	1.00	1.00	1.00
Initial Bse:	128	983	86	122	1071	83	58	339	85	199	368	103
User Adj:	1.00	1.00	1.00	1.00	1.00	1.00	1.00	1.00	1.00	1.00	1.00	1.00
PHF Adj:	0.95	0.95	0.95	0.95	0.95	0.95	0.95	0.95	0.95	0.95	0.95	0.95
PHF Volume:	135	1035	91	128	1127	87	61	357	89	209	387	108
Reduct Vol:	0	0	0	0	0	0	0	0	0	0	0	0
Reduced Vol:	135	1035	91	128	1127	87	61	357	89	209	387	108
PCE Adj:	1.00	1.00	1.00	1.00	1.00	1.00	1.00	1.00	1.00	1.00	1.00	1.00
MLF Adj:	1.00	1.05	1.05	1.00	1.05	1.00	1.03	1.05	1.05	1.03	1.10	1.00
FinalVolume:	135	1086	95	128	1184	87	63	375	94	216	426	108
Saturation Flow Module:												
Sat/Lane:	1800	1800	1800	1800	1800	1800	1800	1800	1800	1800	1800	1800
Adjustment:	0.94	1.00	1.00	0.94	1.00	1.00	0.89	1.00	1.00	0.89	1.00	1.00
Lanes:	1.00	1.84	0.16	1.00	2.00	1.00	2.00	1.60	0.40	2.00	3.00	1.00
Final Sat.:	1700	3310	290	1700	3600	1800	3200	2878	722	3200	5400	1800
Capacity Analysis Module:												
Vol/Sat:	0.08	0.33	0.33	0.08	0.33	0.05	0.02	0.13	0.13	0.07	0.08	0.06
Crit Moves:	****				****			****		****		
Green/Cycle:	0.10	0.39	0.39	0.11	0.40	0.50	0.10	0.32	0.32	0.10	0.32	0.43
Volume/Cap:	0.79	0.85	0.85	0.66	0.82	0.10	0.20	0.41	0.41	0.67	0.25	0.14
Delay/Veh:	65.9	33.2	33.2	51.0	30.8	13.2	41.6	26.8	26.8	49.0	25.2	17.1
User DelAdj:	1.00	1.00	1.00	1.00	1.00	1.00	1.00	1.00	1.00	1.00	1.00	1.00
AdjDel/Veh:	65.9	33.2	33.2	51.0	30.8	13.2	41.6	26.8	26.8	49.0	25.2	17.1
LOS by Move:	E	C	C	D	C	B	D	C	C	D	C	B
HCM2kAvgQ:	6	19	19	4	17	1	1	6	6	5	3	2

Note: Queue reported is the number of cars per lane.

Traffix 8.0.0715 (c) 2008 Dowling Assoc. Licensed to URBAN CROSSROADS, IRVINE

SANBAG CMP Monitoring - City of Rancho Cucamonga
2009 Traffic Conditions
With Existing Geometry

Level Of Service Computation Report
2000 HCM Operations Method (Base Volume Alternative)

Intersection #12 Haven Av. (NS) / Baseline Rd. (EW)

Cycle (sec):	100	Critical Vol./Cap.(X):	0.485
Loss Time (sec):	8	Average Delay (sec/veh):	28.9
Optimal Cycle:	100	Level Of Service:	C

Approach:	North Bound			South Bound			East Bound			West Bound		
Movement:	L	T	R	L	T	R	L	T	R	L	T	R
Control:	Protected			Protected			Protected			Protected		
Rights:	Include			Ovl			Include			Include		
Min. Green:	10	36	36	10	36	36	10	35	35	10	35	35
Y+R:	4.0	4.0	4.0	4.0	4.0	4.0	4.0	4.0	4.0	4.0	4.0	4.0
Lanes:	2 0	3 0	1	2 0	3 0	1	1 0	2 0	1	1 0	2 0	1
Volume Module:												
Base Vol:	64	403	72	90	1037	54	80	334	140	161	448	143
Growth Adj:	1.00	1.00	1.00	1.00	1.00	1.00	1.00	1.00	1.00	1.00	1.00	1.00
Initial Bse:	64	403	72	90	1037	54	80	334	140	161	448	143
User Adj:	1.00	1.00	1.00	1.00	1.00	1.00	1.00	1.00	1.00	1.00	1.00	1.00
PHF Adj:	0.95	0.95	0.95	0.95	0.95	0.95	0.95	0.95	0.95	0.95	0.95	0.95
PHF Volume:	67	424	76	95	1092	57	84	352	147	169	472	151
Reduct Vol:	0	0	0	0	0	0	0	0	0	0	0	0
Reduced Vol:	67	424	76	95	1092	57	84	352	147	169	472	151
PCE Adj:	1.00	1.00	1.00	1.00	1.00	1.00	1.00	1.00	1.00	1.00	1.00	1.00
MLF Adj:	1.03	1.10	1.00	1.03	1.10	1.00	1.00	1.05	1.00	1.00	1.05	1.00
FinalVolume:	69	467	76	98	1201	57	84	369	147	169	495	151
Saturation Flow Module:												
Sat/Lane:	1800	1800	1800	1800	1800	1800	1800	1800	1800	1800	1800	1800
Adjustment:	0.89	1.00	1.00	0.89	1.00	1.00	0.94	1.00	1.00	0.94	1.00	1.00
Lanes:	2.00	3.00	1.00	2.00	3.00	1.00	1.00	2.00	1.00	1.00	2.00	1.00
Final Sat.:	3200	5400	1800	3200	5400	1800	1700	3600	1800	1700	3600	1800
Capacity Analysis Module:												
Vol/Sat:	0.02	0.09	0.04	0.03	0.22	0.03	0.05	0.10	0.08	0.10	0.14	0.08
Crit Moves:	****				****			****		****		
Green/Cycle:	0.10	0.36	0.36	0.10	0.36	0.46	0.10	0.35	0.35	0.11	0.36	0.36
Volume/Cap:	0.22	0.24	0.12	0.30	0.62	0.07	0.48	0.29	0.23	0.91	0.38	0.23
Delay/Veh:	41.7	22.5	21.5	42.3	26.9	15.0	44.5	23.7	23.2	84.4	24.1	22.7
User DelAdj:	1.00	1.00	1.00	1.00	1.00	1.00	1.00	1.00	1.00	1.00	1.00	1.00
AdjDel/Veh:	41.7	22.5	21.5	42.3	26.9	15.0	44.5	23.7	23.2	84.4	24.1	22.7
LOS by Move:	D	C	C	D	C	B	D	C	C	F	C	C
HCM2kAvgQ:	1	3	1	2	11	1	3	4	3	6	5	3

Note: Queue reported is the number of cars per lane.

Traffix 8.0.0715 (c) 2008 Dowling Assoc. Licensed to URBAN CROSSROADS, IRVINE

SANBAG CMP Monitoring - City of Rancho Cucamonga
2009 Traffic Conditions
With Existing Geometry

Level Of Service Computation Report
2000 HCM Operations Method (Base Volume Alternative)

Intersection #12 Haven Av. (NS) / Baseline Rd. (EW)

Cycle (sec):	100	Critical Vol./Cap.(X):	0.666
Loss Time (sec):	8	Average Delay (sec/veh):	35.0
Optimal Cycle:	100	Level Of Service:	C

Approach:	North Bound			South Bound			East Bound			West Bound		
Movement:	L	T	R	L	T	R	L	T	R	L	T	R
Control:	Protected			Protected			Protected			Protected		
Rights:	Include			Ovl			Include			Include		
Min. Green:	10	36	36	10	36	36	10	35	35	10	35	35
Y+R:	4.0	4.0	4.0	4.0	4.0	4.0	4.0	4.0	4.0	4.0	4.0	4.0
Lanes:	2 0	3 0	1	2 0	3 0	1	1 0	2 0	1	1 0	2 0	1
Volume Module:												
Base Vol:	270	1269	160	187	610	46	169	602	104	150	453	158
Growth Adj:	1.00	1.00	1.00	1.00	1.00	1.00	1.00	1.00	1.00	1.00	1.00	1.00
Initial Bse:	270	1269	160	187	610	46	169	602	104	150	453	158
User Adj:	1.00	1.00	1.00	1.00	1.00	1.00	1.00	1.00	1.00	1.00	1.00	1.00
PHF Adj:	0.95	0.95	0.95	0.95	0.95	0.95	0.95	0.95	0.95	0.95	0.95	0.95
PHF Volume:	284	1336	168	197	642	48	178	634	109	158	477	166
Reduct Vol:	0	0	0	0	0	0	0	0	0	0	0	0
Reduced Vol:	284	1336	168	197	642	48	178	634	109	158	477	166
PCE Adj:	1.00	1.00	1.00	1.00	1.00	1.00	1.00	1.00	1.00	1.00	1.00	1.00
MLF Adj:	1.03	1.10	1.00	1.03	1.10	1.00	1.00	1.05	1.00	1.00	1.05	1.00
FinalVolume:	293	1469	168	203	706	48	178	665	109	158	501	166
Saturation Flow Module:												
Sat/Lane:	1800	1800	1800	1800	1800	1800	1800	1800	1800	1800	1800	1800
Adjustment:	0.89	1.00	1.00	0.89	1.00	1.00	0.94	1.00	1.00	0.94	1.00	1.00
Lanes:	2.00	3.00	1.00	2.00	3.00	1.00	1.00	2.00	1.00	1.00	2.00	1.00
Final Sat.:	3200	5400	1800	3200	5400	1800	1700	3600	1800	1700	3600	1800
Capacity Analysis Module:												
Vol/Sat:	0.09	0.27	0.09	0.06	0.13	0.03	0.10	0.18	0.06	0.09	0.14	0.09
Crit Moves:		****		****				****		****		
Green/Cycle:	0.10	0.36	0.36	0.10	0.36	0.47	0.11	0.35	0.35	0.11	0.35	0.35
Volume/Cap:	0.91	0.76	0.26	0.63	0.36	0.06	0.99	0.53	0.17	0.84	0.39	0.26
Delay/Veh:	74.1	29.9	22.8	47.4	23.7	14.7	108.1	26.3	22.6	71.7	24.4	23.2
User DelAdj:	1.00	1.00	1.00	1.00	1.00	1.00	1.00	1.00	1.00	1.00	1.00	1.00
AdjDel/Veh:	74.1	29.9	22.8	47.4	23.7	14.7	108.1	26.3	22.6	71.7	24.4	23.2
LOS by Move:	E	C	C	D	C	B	F	C	C	E	C	C
HCM2kAvgQ:	6	13	3	5	5	1	8	8	2	6	6	3

Note: Queue reported is the number of cars per lane.

Traffix 8.0.0715 (c) 2008 Dowling Assoc. Licensed to URBAN CROSSROADS, IRVINE

SANBAG CMP Monitoring - City of Rancho Cucamonga
2009 Traffic Conditions
With Existing Geometry

Level Of Service Computation Report
2000 HCM Operations Method (Base Volume Alternative)

Intersection #13 Haven Av. (NS) / Foothill Bl. (EW)

Cycle (sec):	110	Critical Vol./Cap.(X):	0.443
Loss Time (sec):	8	Average Delay (sec/veh):	31.7
Optimal Cycle:	110	Level Of Service:	C

Approach:	North Bound			South Bound			East Bound			West Bound		
Movement:	L	T	R	L	T	R	L	T	R	L	T	R
Control:	Protected			Protected			Protected			Protected		
Rights:	Include			Include			Include			Include		
Min. Green:	10	38	38	10	38	38	10	38	38	10	38	38
Y+R:	4.0	4.0	4.0	4.0	4.0	4.0	4.0	4.0	4.0	4.0	4.0	4.0
Lanes:	2 0	3	1 0	2 0	3	0 1	2 0	3	0 1	2 0	3	0 1
Volume Module:												
Base Vol:	111	373	118	252	903	96	157	432	210	168	409	49
Growth Adj:	1.00	1.00	1.00	1.00	1.00	1.00	1.00	1.00	1.00	1.00	1.00	1.00
Initial Bse:	111	373	118	252	903	96	157	432	210	168	409	49
User Adj:	1.00	1.00	1.00	1.00	1.00	1.00	1.00	1.00	1.00	1.00	1.00	1.00
PHF Adj:	0.95	0.95	0.95	0.95	0.95	0.95	0.95	0.95	0.95	0.95	0.95	0.95
PHF Volume:	117	393	124	265	951	101	165	455	221	177	431	52
Reduct Vol:	0	0	0	0	0	0	0	0	0	0	0	0
Reduced Vol:	117	393	124	265	951	101	165	455	221	177	431	52
PCE Adj:	1.00	1.00	1.00	1.00	1.00	1.00	1.00	1.00	1.00	1.00	1.00	1.00
MLF Adj:	1.03	1.10	1.10	1.03	1.10	1.00	1.03	1.10	1.00	1.03	1.10	1.00
FinalVolume:	120	432	137	273	1046	101	170	500	221	182	474	52
Saturation Flow Module:												
Sat/Lane:	1800	1800	1800	1800	1800	1800	1800	1800	1800	1800	1800	1800
Adjustment:	0.89	1.00	1.00	0.89	1.00	1.00	0.89	1.00	1.00	0.89	1.00	1.00
Lanes:	2.00	3.04	0.96	2.00	3.00	1.00	2.00	3.00	1.00	2.00	3.00	1.00
Final Sat.:	3200	5470	1730	3200	5400	1800	3200	5400	1800	3200	5400	1800
Capacity Analysis Module:												
Vol/Sat:	0.04	0.08	0.08	0.09	0.19	0.06	0.05	0.09	0.12	0.06	0.09	0.03
Crit Moves:	****				****				****	****		
Green/Cycle:	0.09	0.37	0.37	0.10	0.38	0.38	0.10	0.35	0.35	0.11	0.36	0.36
Volume/Cap:	0.41	0.21	0.21	0.87	0.51	0.15	0.56	0.27	0.36	0.51	0.24	0.08
Delay/Veh:	48.2	23.6	23.6	71.2	26.5	22.5	49.9	26.0	27.2	47.3	24.6	23.1
User DelAdj:	1.00	1.00	1.00	1.00	1.00	1.00	1.00	1.00	1.00	1.00	1.00	1.00
AdjDel/Veh:	48.2	23.6	23.6	71.2	26.5	22.5	49.9	26.0	27.2	47.3	24.6	23.1
LOS by Move:	D	C	C	E	C	C	D	C	C	D	C	C
HCM2kAvgQ:	2	3	3	6	9	2	3	4	5	3	4	1

Note: Queue reported is the number of cars per lane.

Traffix 8.0.0715 (c) 2008 Dowling Assoc. Licensed to URBAN CROSSROADS, IRVINE

SANBAG CMP Monitoring - City of Rancho Cucamonga
2009 Traffic Conditions
With Existing Geometry

Level Of Service Computation Report
2000 HCM Operations Method (Base Volume Alternative)

Intersection #13 Haven Av. (NS) / Foothill Bl. (EW)

Cycle (sec):	110	Critical Vol./Cap.(X):	0.653
Loss Time (sec):	8	Average Delay (sec/veh):	38.5
Optimal Cycle:	110	Level Of Service:	D

Approach:	North Bound			South Bound			East Bound			West Bound		
Movement:	L	T	R	L	T	R	L	T	R	L	T	R
Control:	Protected			Protected			Protected			Protected		
Rights:	Include			Include			Include			Include		
Min. Green:	10	38	38	10	38	38	10	38	38	10	38	38
Y+R:	4.0	4.0	4.0	4.0	4.0	4.0	4.0	4.0	4.0	4.0	4.0	4.0
Lanes:	2 0	3 1	0	2 0	3 0	1	2 0	3 0	1	2 0	3 0	1
Volume Module:												
Base Vol:	252	1334	267	223	473	36	412	865	115	237	620	217
Growth Adj:	1.00	1.00	1.00	1.00	1.00	1.00	1.00	1.00	1.00	1.00	1.00	1.00
Initial Bse:	252	1334	267	223	473	36	412	865	115	237	620	217
User Adj:	1.00	1.00	1.00	1.00	1.00	1.00	1.00	1.00	1.00	1.00	1.00	1.00
PHF Adj:	0.95	0.95	0.95	0.95	0.95	0.95	0.95	0.95	0.95	0.95	0.95	0.95
PHF Volume:	265	1404	281	235	498	38	434	911	121	249	653	228
Reduct Vol:	0	0	0	0	0	0	0	0	0	0	0	0
Reduced Vol:	265	1404	281	235	498	38	434	911	121	249	653	228
PCE Adj:	1.00	1.00	1.00	1.00	1.00	1.00	1.00	1.00	1.00	1.00	1.00	1.00
MLF Adj:	1.03	1.10	1.10	1.03	1.10	1.00	1.03	1.10	1.00	1.03	1.10	1.00
FinalVolume:	273	1545	309	242	548	38	447	1002	121	257	718	228
Saturation Flow Module:												
Sat/Lane:	1800	1800	1800	1800	1800	1800	1800	1800	1800	1800	1800	1800
Adjustment:	0.89	1.00	1.00	0.89	1.00	1.00	0.89	1.00	1.00	0.89	1.00	1.00
Lanes:	2.00	3.33	0.67	2.00	3.00	1.00	2.00	3.00	1.00	2.00	3.00	1.00
Final Sat.:	3200	5999	1201	3200	5400	1800	3200	5400	1800	3200	5400	1800
Capacity Analysis Module:												
Vol/Sat:	0.09	0.26	0.26	0.08	0.10	0.02	0.14	0.19	0.07	0.08	0.13	0.13
Crit Moves:		****		****			****				****	
Green/Cycle:	0.09	0.35	0.35	0.09	0.35	0.35	0.15	0.39	0.39	0.10	0.35	0.35
Volume/Cap:	0.94	0.75	0.75	0.83	0.29	0.06	0.96	0.48	0.17	0.79	0.38	0.37
Delay/Veh:	86.5	33.0	33.0	67.1	26.3	24.1	78.2	25.4	22.2	60.0	27.3	27.4
User DelAdj:	1.00	1.00	1.00	1.00	1.00	1.00	1.00	1.00	1.00	1.00	1.00	1.00
AdjDel/Veh:	86.5	33.0	33.0	67.1	26.3	24.1	78.2	25.4	22.2	60.0	27.3	27.4
LOS by Move:	F	C	C	E	C	C	E	C	C	E	C	C
HCM2kAvgQ:	6	13	13	5	4	1	9	8	2	5	6	6

Note: Queue reported is the number of cars per lane.

Traffix 8.0.0715 (c) 2008 Dowling Assoc. Licensed to URBAN CROSSROADS, IRVINE

SANBAG CMP Monitoring - City of Rancho Cucamonga
2009 Traffic Conditions
With Existing Geometry

Level Of Service Computation Report
2000 HCM Operations Method (Base Volume Alternative)

Intersection #14 Haven Av. (NS) / Arrow Rte. (EW)

Cycle (sec):	100	Critical Vol./Cap.(X):	0.473
Loss Time (sec):	8 (Y+R=4.0 sec)	Average Delay (sec/veh):	27.6
Optimal Cycle:	100	Level Of Service:	C

Approach:	North Bound			South Bound			East Bound			West Bound		
Movement:	L	T	R	L	T	R	L	T	R	L	T	R
Control:	Protected			Protected			Protected			Protected		
Rights:	Ovl			Include			Ovl			Include		
Min. Green:	10	28	28	10	28	28	10	35	35	10	35	35
Lanes:	2 0 3	0 1		2 0 2	1 0		2 0 2	0 1		2 0 1	1 0	
Volume Module:												
Base Vol:	59	786	148	179	808	149	176	540	112	119	432	59
Growth Adj:	1.00	1.00	1.00	1.00	1.00	1.00	1.00	1.00	1.00	1.00	1.00	1.00
Initial Bse:	59	786	148	179	808	149	176	540	112	119	432	59
User Adj:	1.00	1.00	1.00	1.00	1.00	1.00	1.00	1.00	1.00	1.00	1.00	1.00
PHF Adj:	0.95	0.95	0.95	0.95	0.95	0.95	0.95	0.95	0.95	0.95	0.95	0.95
PHF Volume:	62	827	156	188	851	157	185	568	118	125	455	62
Reduct Vol:	0	0	0	0	0	0	0	0	0	0	0	0
Reduced Vol:	62	827	156	188	851	157	185	568	118	125	455	62
PCE Adj:	1.00	1.00	1.00	1.00	1.00	1.00	1.00	1.00	1.00	1.00	1.00	1.00
MLF Adj:	1.03	1.10	1.00	1.03	1.10	1.10	1.03	1.05	1.00	1.03	1.05	1.05
FinalVolume:	64	910	156	194	936	173	191	597	118	129	477	65
Saturation Flow Module:												
Sat/Lane:	1800	1800	1800	1800	1800	1800	1800	1800	1800	1800	1800	1800
Adjustment:	0.89	1.00	1.00	0.89	1.00	1.00	0.89	1.00	1.00	0.89	1.00	1.00
Lanes:	2.00	3.00	1.00	2.00	2.53	0.47	2.00	2.00	1.00	2.00	1.76	0.24
Final Sat.:	3200	5400	1800	3200	4559	841	3200	3600	1800	3200	3167	433
Capacity Analysis Module:												
Vol/Sat:	0.02	0.17	0.09	0.06	0.21	0.21	0.06	0.17	0.07	0.04	0.15	0.15
Crit Moves:	****				****		****				****	
Green/Cycle:	0.10	0.34	0.44	0.12	0.36	0.36	0.11	0.35	0.45	0.10	0.35	0.35
Volume/Cap:	0.20	0.49	0.20	0.50	0.56	0.56	0.56	0.47	0.14	0.40	0.43	0.43
Delay/Veh:	41.6	26.2	17.1	42.0	25.8	25.8	44.7	25.2	16.0	42.9	25.1	25.1
User DelAdj:	1.00	1.00	1.00	1.00	1.00	1.00	1.00	1.00	1.00	1.00	1.00	1.00
AdjDel/Veh:	41.6	26.2	17.1	42.0	25.8	25.8	44.7	25.2	16.0	42.9	25.1	25.1
LOS by Move:	D	C	B	D	C	C	D	C	B	D	C	C
HCM2kAvgQ:	1	8	3	4	9	9	4	7	2	3	7	7

Note: Queue reported is the number of cars per lane.

Traffix 7.9.0215 (c) 2008 Dowling Assoc. Licensed to URBAN CROSSROADS, IRVINE

SANBAG CMP Monitoring - City of Rancho Cucamonga
2009 Traffic Conditions
With Existing Geometry

Level Of Service Computation Report
2000 HCM Operations Method (Base Volume Alternative)

Intersection #14 Haven Av. (NS) / Arrow Rte. (EW)

Cycle (sec):	100	Critical Vol./Cap.(X):	0.695
Loss Time (sec):	8 (Y+R=4.0 sec)	Average Delay (sec/veh):	31.3
Optimal Cycle:	100	Level Of Service:	C

Approach:	North Bound			South Bound			East Bound			West Bound		
Movement:	L	T	R	L	T	R	L	T	R	L	T	R
Control:	Protected			Protected			Protected			Protected		
Rights:	Ovl			Include			Ovl			Include		
Min. Green:	10	28	28	10	28	28	10	35	35	10	35	35
Lanes:	2 0	3 0	1	2 0	2 1	0	2 0	2 0	1	2 0	1 1	0
Volume Module:												
Base Vol:	218	1285	158	117	607	184	199	687	77	241	687	150
Growth Adj:	1.00	1.00	1.00	1.00	1.00	1.00	1.00	1.00	1.00	1.00	1.00	1.00
Initial Bse:	218	1285	158	117	607	184	199	687	77	241	687	150
User Adj:	1.00	1.00	1.00	1.00	1.00	1.00	1.00	1.00	1.00	1.00	1.00	1.00
PHF Adj:	0.95	0.95	0.95	0.95	0.95	0.95	0.95	0.95	0.95	0.95	0.95	0.95
PHF Volume:	229	1353	166	123	639	194	209	723	81	254	723	158
Reduct Vol:	0	0	0	0	0	0	0	0	0	0	0	0
Reduced Vol:	229	1353	166	123	639	194	209	723	81	254	723	158
PCE Adj:	1.00	1.00	1.00	1.00	1.00	1.00	1.00	1.00	1.00	1.00	1.00	1.00
MLF Adj:	1.03	1.10	1.00	1.03	1.10	1.10	1.03	1.05	1.00	1.03	1.05	1.05
FinalVolume:	236	1488	166	127	703	213	216	759	81	261	759	166
Saturation Flow Module:												
Sat/Lane:	1800	1800	1800	1800	1800	1800	1800	1800	1800	1800	1800	1800
Adjustment:	0.89	1.00	1.00	0.89	1.00	1.00	0.89	1.00	1.00	0.89	1.00	1.00
Lanes:	2.00	3.00	1.00	2.00	2.30	0.70	2.00	2.00	1.00	2.00	1.64	0.36
Final Sat.:	3200	5400	1800	3200	4144	1256	3200	3600	1800	3200	2955	645
Capacity Analysis Module:												
Vol/Sat:	0.07	0.28	0.09	0.04	0.17	0.17	0.07	0.21	0.05	0.08	0.26	0.26
Crit Moves:		****		****			****				****	
Green/Cycle:	0.12	0.37	0.47	0.10	0.35	0.35	0.10	0.35	0.47	0.10	0.35	0.35
Volume/Cap:	0.60	0.74	0.20	0.40	0.49	0.49	0.67	0.60	0.10	0.82	0.73	0.73
Delay/Veh:	44.0	29.0	15.6	43.0	25.9	25.9	49.0	27.6	14.6	59.1	30.7	30.7
User DelAdj:	1.00	1.00	1.00	1.00	1.00	1.00	1.00	1.00	1.00	1.00	1.00	1.00
AdjDel/Veh:	44.0	29.0	15.6	43.0	25.9	25.9	49.0	27.6	14.6	59.1	30.7	30.7
LOS by Move:	D	C	B	D	C	C	D	C	B	E	C	C
HCM2kAvgQ:	5	15	3	2	8	8	5	10	1	7	14	14

Note: Queue reported is the number of cars per lane.

Traffix 7.9.0215 (c) 2008 Dowling Assoc. Licensed to URBAN CROSSROADS, IRVINE

SANBAG CMP Monitoring - City of Rancho Cucamonga
2009 Traffic Conditions
With Existing Geometry

Level Of Service Computation Report
2000 HCM Operations Method (Base Volume Alternative)

Intersection #15 Milliken Av. (NS) / Baseline Rd. (EW)

Cycle (sec):	100	Critical Vol./Cap.(X):	0.421
Loss Time (sec):	8	Average Delay (sec/veh):	27.8
Optimal Cycle:	100	Level Of Service:	C

Approach:	North Bound			South Bound			East Bound			West Bound		
Movement:	L	T	R	L	T	R	L	T	R	L	T	R
Control:	Protected			Protected			Protected			Protected		
Rights:	Include			Include			Include			Include		
Min. Green:	10	35	35	10	35	35	10	36	36	10	36	36
Y+R:	4.0	4.0	4.0	4.0	4.0	4.0	4.0	4.0	4.0	4.0	4.0	4.0
Lanes:	2 0	3 0	1	2 0	3 0	1	2 0	3 0	1	2 0	3 0	1
Volume Module:												
Base Vol:	86	595	65	75	823	248	243	331	88	158	463	103
Growth Adj:	1.00	1.00	1.00	1.00	1.00	1.00	1.00	1.00	1.00	1.00	1.00	1.00
Initial Bse:	86	595	65	75	823	248	243	331	88	158	463	103
User Adj:	1.00	1.00	1.00	1.00	1.00	1.00	1.00	1.00	1.00	1.00	1.00	1.00
PHF Adj:	0.95	0.95	0.95	0.95	0.95	0.95	0.95	0.95	0.95	0.95	0.95	0.95
PHF Volume:	91	626	68	79	866	261	256	348	93	166	487	108
Reduct Vol:	0	0	0	0	0	0	0	0	0	0	0	0
Reduced Vol:	91	626	68	79	866	261	256	348	93	166	487	108
PCE Adj:	1.00	1.00	1.00	1.00	1.00	1.00	1.00	1.00	1.00	1.00	1.00	1.00
MLF Adj:	1.03	1.10	1.00	1.03	1.10	1.00	1.03	1.10	1.00	1.03	1.10	1.00
FinalVolume:	93	689	68	81	953	261	263	383	93	171	536	108
Saturation Flow Module:												
Sat/Lane:	1800	1800	1800	1800	1800	1800	1800	1800	1800	1800	1800	1800
Adjustment:	0.89	1.00	1.00	0.89	1.00	1.00	0.89	1.00	1.00	0.89	1.00	1.00
Lanes:	2.00	3.00	1.00	2.00	3.00	1.00	2.00	3.00	1.00	2.00	3.00	1.00
Final Sat.:	3200	5400	1800	3200	5400	1800	3200	5400	1800	3200	5400	1800
Capacity Analysis Module:												
Vol/Sat:	0.03	0.13	0.04	0.03	0.18	0.15	0.08	0.07	0.05	0.05	0.10	0.06
Crit Moves:	****				****		****				****	
Green/Cycle:	0.10	0.35	0.35	0.10	0.35	0.35	0.11	0.37	0.37	0.10	0.36	0.36
Volume/Cap:	0.29	0.36	0.11	0.25	0.50	0.41	0.75	0.19	0.14	0.52	0.28	0.17
Delay/Veh:	42.2	24.3	22.0	42.0	25.9	25.2	51.8	21.6	21.2	44.1	22.8	21.9
User DelAdj:	1.00	1.00	1.00	1.00	1.00	1.00	1.00	1.00	1.00	1.00	1.00	1.00
AdjDel/Veh:	42.2	24.3	22.0	42.0	25.9	25.2	51.8	21.6	21.2	44.1	22.8	21.9
LOS by Move:	D	C	C	D	C	C	D	C	C	D	C	C
HCM2kAvgQ:	1	5	1	2	8	6	5	3	2	3	4	2

Note: Queue reported is the number of cars per lane.

Traffix 8.0.0715 (c) 2008 Dowling Assoc. Licensed to URBAN CROSSROADS, IRVINE

SANBAG CMP Monitoring - City of Rancho Cucamonga
2009 Traffic Conditions
With Existing Geometry

Level Of Service Computation Report
2000 HCM Operations Method (Base Volume Alternative)

Intersection #15 Milliken Av. (NS) / Baseline Rd. (EW)

Cycle (sec):	100	Critical Vol./Cap.(X):	0.471
Loss Time (sec):	8	Average Delay (sec/veh):	31.7
Optimal Cycle:	100	Level Of Service:	C

Approach:	North Bound			South Bound			East Bound			West Bound		
Movement:	L	T	R	L	T	R	L	T	R	L	T	R
Control:	Protected			Protected			Protected			Protected		
Rights:	Include			Include			Include			Include		
Min. Green:	10	35	35	10	35	35	10	36	36	10	36	36
Y+R:	4.0	4.0	4.0	4.0	4.0	4.0	4.0	4.0	4.0	4.0	4.0	4.0
Lanes:	2 0	3 0	1	2 0	3 0	1	2 0	3 0	1	2 0	3 0	1
Volume Module:												
Base Vol:	279	988	192	186	554	106	238	565	66	111	342	84
Growth Adj:	1.00	1.00	1.00	1.00	1.00	1.00	1.00	1.00	1.00	1.00	1.00	1.00
Initial Bse:	279	988	192	186	554	106	238	565	66	111	342	84
User Adj:	1.00	1.00	1.00	1.00	1.00	1.00	1.00	1.00	1.00	1.00	1.00	1.00
PHF Adj:	0.95	0.95	0.95	0.95	0.95	0.95	0.95	0.95	0.95	0.95	0.95	0.95
PHF Volume:	294	1040	202	196	583	112	251	595	69	117	360	88
Reduct Vol:	0	0	0	0	0	0	0	0	0	0	0	0
Reduced Vol:	294	1040	202	196	583	112	251	595	69	117	360	88
PCE Adj:	1.00	1.00	1.00	1.00	1.00	1.00	1.00	1.00	1.00	1.00	1.00	1.00
MLF Adj:	1.03	1.10	1.00	1.03	1.10	1.00	1.03	1.10	1.00	1.03	1.10	1.00
FinalVolume:	302	1144	202	202	641	112	258	654	69	120	396	88
Saturation Flow Module:												
Sat/Lane:	1800	1800	1800	1800	1800	1800	1800	1800	1800	1800	1800	1800
Adjustment:	0.89	1.00	1.00	0.89	1.00	1.00	0.89	1.00	1.00	0.89	1.00	1.00
Lanes:	2.00	3.00	1.00	2.00	3.00	1.00	2.00	3.00	1.00	2.00	3.00	1.00
Final Sat.:	3200	5400	1800	3200	5400	1800	3200	5400	1800	3200	5400	1800
Capacity Analysis Module:												
Vol/Sat:	0.09	0.21	0.11	0.06	0.12	0.06	0.08	0.12	0.04	0.04	0.07	0.05
Crit Moves:		****		****				****		****		
Green/Cycle:	0.10	0.35	0.35	0.11	0.36	0.36	0.10	0.36	0.36	0.10	0.36	0.36
Volume/Cap:	0.92	0.60	0.32	0.60	0.33	0.17	0.81	0.34	0.11	0.38	0.20	0.14
Delay/Veh:	75.5	27.0	23.8	45.6	23.5	22.1	58.0	23.4	21.4	42.8	22.2	21.6
User DelAdj:	1.00	1.00	1.00	1.00	1.00	1.00	1.00	1.00	1.00	1.00	1.00	1.00
AdjDel/Veh:	75.5	27.0	23.8	45.6	23.5	22.1	58.0	23.4	21.4	42.8	22.2	21.6
LOS by Move:	E	C	C	D	C	C	E	C	C	D	C	C
HCM2kAvgQ:	6	9	4	4	5	2	5	5	1	2	3	2

Note: Queue reported is the number of cars per lane.

Traffix 8.0.0715 (c) 2008 Dowling Assoc. Licensed to URBAN CROSSROADS, IRVINE

SANBAG CMP Monitoring - City of Rancho Cucamonga
2009 Traffic Conditions
With Existing Geometry

Level Of Service Computation Report
2000 HCM Operations Method (Base Volume Alternative)

Intersection #16 Milliken Av. (NS) / Foothill Bl. (EW)

Cycle (sec):	110	Critical Vol./Cap.(X):	0.455
Loss Time (sec):	8	Average Delay (sec/veh):	29.9
Optimal Cycle:	110	Level Of Service:	C

Approach:	North Bound			South Bound			East Bound			West Bound		
Movement:	L	T	R	L	T	R	L	T	R	L	T	R
Control:	Protected			Protected			Protected			Protected		
Rights:	Include			Include			Include			Include		
Min. Green:	10	37	37	10	37	37	10	42	42	10	42	42
Y+R:	4.0	4.0	4.0	4.0	4.0	4.0	4.0	4.0	4.0	4.0	4.0	4.0
Lanes:	2 0	4 0	1	2 0	3 0	1	2 0	3 0	1	2 0	3 0	1
Volume Module:												
Base Vol:	90	254	63	162	944	195	59	460	108	213	788	76
Growth Adj:	1.00	1.00	1.00	1.00	1.00	1.00	1.00	1.00	1.00	1.00	1.00	1.00
Initial Bse:	90	254	63	162	944	195	59	460	108	213	788	76
User Adj:	1.00	1.00	1.00	1.00	1.00	1.00	1.00	1.00	1.00	1.00	1.00	1.00
PHF Adj:	0.95	0.95	0.95	0.95	0.95	0.95	0.95	0.95	0.95	0.95	0.95	0.95
PHF Volume:	95	267	66	171	994	205	62	484	114	224	829	80
Reduct Vol:	0	0	0	0	0	0	0	0	0	0	0	0
Reduced Vol:	95	267	66	171	994	205	62	484	114	224	829	80
PCE Adj:	1.00	1.00	1.00	1.00	1.00	1.00	1.00	1.00	1.00	1.00	1.00	1.00
MLF Adj:	1.03	1.10	1.00	1.03	1.10	1.00	1.03	1.10	1.00	1.03	1.10	1.00
FinalVolume:	98	294	66	176	1093	205	64	533	114	231	912	80
Saturation Flow Module:												
Sat/Lane:	1800	1800	1800	1800	1800	1800	1800	1800	1800	1800	1800	1800
Adjustment:	0.89	1.00	1.00	0.89	1.00	1.00	0.89	1.00	1.00	0.89	1.00	1.00
Lanes:	2.00	4.00	1.00	2.00	3.00	1.00	2.00	3.00	1.00	2.00	3.00	1.00
Final Sat.:	3200	7200	1800	3200	5400	1800	3200	5400	1800	3200	5400	1800
Capacity Analysis Module:												
Vol/Sat:	0.03	0.04	0.04	0.05	0.20	0.11	0.02	0.10	0.06	0.07	0.17	0.04
Crit Moves:	****				****		****				****	
Green/Cycle:	0.09	0.36	0.36	0.10	0.36	0.36	0.09	0.38	0.38	0.09	0.38	0.38
Volume/Cap:	0.34	0.11	0.10	0.57	0.56	0.31	0.22	0.26	0.17	0.79	0.44	0.12
Delay/Veh:	47.6	23.7	23.6	50.0	28.3	25.4	46.8	23.4	22.5	62.9	25.4	22.1
User DelAdj:	1.00	1.00	1.00	1.00	1.00	1.00	1.00	1.00	1.00	1.00	1.00	1.00
AdjDel/Veh:	47.6	23.7	23.6	50.0	28.3	25.4	46.8	23.4	22.5	62.9	25.4	22.1
LOS by Move:	D	C	C	D	C	C	D	C	C	E	C	C
HCM2kAvgQ:	2	2	1	3	10	5	1	4	2	4	7	2

Note: Queue reported is the number of cars per lane.

Traffix 8.0.0715 (c) 2008 Dowling Assoc. Licensed to URBAN CROSSROADS, IRVINE

SANBAG CMP Monitoring - City of Rancho Cucamonga
2009 Traffic Conditions
With Existing Geometry

Level Of Service Computation Report
2000 HCM Operations Method (Base Volume Alternative)

Intersection #16 Milliken Av. (NS) / Foothill Bl. (EW)

Cycle (sec):	110	Critical Vol./Cap.(X):	0.590
Loss Time (sec):	8	Average Delay (sec/veh):	36.6
Optimal Cycle:	110	Level Of Service:	D

Approach:	North Bound			South Bound			East Bound			West Bound		
Movement:	L	T	R	L	T	R	L	T	R	L	T	R
Control:	Protected			Protected			Protected			Protected		
Rights:	Include			Include			Include			Include		
Min. Green:	10	37	37	10	37	37	10	42	42	10	42	42
Y+R:	4.0	4.0	4.0	4.0	4.0	4.0	4.0	4.0	4.0	4.0	4.0	4.0
Lanes:	2 0	4 0	1	2 0	3 0	1	2 0	3 0	1	2 0	3 0	1
Volume Module:												
Base Vol:	316	1373	393	163	407	104	277	1349	153	187	665	139
Growth Adj:	1.00	1.00	1.00	1.00	1.00	1.00	1.00	1.00	1.00	1.00	1.00	1.00
Initial Bse:	316	1373	393	163	407	104	277	1349	153	187	665	139
User Adj:	1.00	1.00	1.00	1.00	1.00	1.00	1.00	1.00	1.00	1.00	1.00	1.00
PHF Adj:	0.95	0.95	0.95	0.95	0.95	0.95	0.95	0.95	0.95	0.95	0.95	0.95
PHF Volume:	333	1445	414	172	428	109	292	1420	161	197	700	146
Reduct Vol:	0	0	0	0	0	0	0	0	0	0	0	0
Reduced Vol:	333	1445	414	172	428	109	292	1420	161	197	700	146
PCE Adj:	1.00	1.00	1.00	1.00	1.00	1.00	1.00	1.00	1.00	1.00	1.00	1.00
MLF Adj:	1.03	1.10	1.00	1.03	1.10	1.00	1.03	1.10	1.00	1.03	1.10	1.00
FinalVolume:	343	1590	414	177	471	109	300	1562	161	203	770	146
Saturation Flow Module:												
Sat/Lane:	1800	1800	1800	1800	1800	1800	1800	1800	1800	1800	1800	1800
Adjustment:	0.89	1.00	1.00	0.89	1.00	1.00	0.89	1.00	1.00	0.89	1.00	1.00
Lanes:	2.00	4.00	1.00	2.00	3.00	1.00	2.00	3.00	1.00	2.00	3.00	1.00
Final Sat.:	3200	7200	1800	3200	5400	1800	3200	5400	1800	3200	5400	1800
Capacity Analysis Module:												
Vol/Sat:	0.11	0.22	0.23	0.06	0.09	0.06	0.09	0.29	0.09	0.06	0.14	0.08
Crit Moves:	****				****			****			****	
Green/Cycle:	0.12	0.36	0.36	0.10	0.34	0.34	0.09	0.38	0.38	0.09	0.38	0.38
Volume/Cap:	0.91	0.62	0.64	0.57	0.26	0.18	1.03	0.76	0.23	0.70	0.37	0.21
Delay/Veh:	72.5	29.6	31.7	50.0	26.6	25.9	111.4	31.2	23.3	55.8	24.6	23.0
User DelAdj:	1.00	1.00	1.00	1.00	1.00	1.00	1.00	1.00	1.00	1.00	1.00	1.00
AdjDel/Veh:	72.5	29.6	31.7	50.0	26.6	25.9	111.4	31.2	23.3	55.8	24.6	23.0
LOS by Move:	E	C	C	D	C	C	F	C	C	E	C	C
HCM2kAvgQ:	6	10	11	3	4	2	8	15	4	4	6	3

Note: Queue reported is the number of cars per lane.

Traffix 8.0.0715 (c) 2008 Dowling Assoc. Licensed to URBAN CROSSROADS, IRVINE

SANBAG CMP Monitoring - City of Rancho Cucamonga
2009 Traffic Conditions
With Existing Geometry

Level Of Service Computation Report
2000 HCM Operations Method (Base Volume Alternative)

Intersection #17 Milliken Av. (NS) / Arrow Rte. (EW)

Cycle (sec):	120	Critical Vol./Cap.(X):	0.487
Loss Time (sec):	8	Average Delay (sec/veh):	32.0
Optimal Cycle:	120	Level Of Service:	C

Approach:	North Bound			South Bound			East Bound			West Bound		
Movement:	L	T	R	L	T	R	L	T	R	L	T	R
Control:	Protected			Protected			Protected			Protected		
Rights:	Include			Include			Include			Include		
Min. Green:	10	28	28	10	28	28	10	35	35	10	35	35
Y+R:	4.0	4.0	4.0	4.0	4.0	4.0	4.0	4.0	4.0	4.0	4.0	4.0
Lanes:	2 0	3 0	1	2 0	3 0	1	1 0	2 0	1	1 0	2 0	1
Volume Module:												
Base Vol:	193	319	42	66	902	180	74	241	142	94	488	37
Growth Adj:	1.00	1.00	1.00	1.00	1.00	1.00	1.00	1.00	1.00	1.00	1.00	1.00
Initial Bse:	193	319	42	66	902	180	74	241	142	94	488	37
User Adj:	1.00	1.00	1.00	1.00	1.00	1.00	1.00	1.00	1.00	1.00	1.00	1.00
PHF Adj:	0.95	0.95	0.95	0.95	0.95	0.95	0.95	0.95	0.95	0.95	0.95	0.95
PHF Volume:	203	336	44	69	949	189	78	254	149	99	514	39
Reduct Vol:	0	0	0	0	0	0	0	0	0	0	0	0
Reduced Vol:	203	336	44	69	949	189	78	254	149	99	514	39
PCE Adj:	1.00	1.00	1.00	1.00	1.00	1.00	1.00	1.00	1.00	1.00	1.00	1.00
MLF Adj:	1.03	1.10	1.00	1.03	1.10	1.00	1.00	1.05	1.00	1.00	1.05	1.00
FinalVolume:	209	369	44	72	1044	189	78	266	149	99	539	39
Saturation Flow Module:												
Sat/Lane:	1800	1800	1800	1800	1800	1800	1800	1800	1800	1800	1800	1800
Adjustment:	0.89	1.00	1.00	0.89	1.00	1.00	0.94	1.00	1.00	0.94	1.00	1.00
Lanes:	2.00	3.00	1.00	2.00	3.00	1.00	1.00	2.00	1.00	1.00	2.00	1.00
Final Sat.:	3200	5400	1800	3200	5400	1800	1700	3600	1800	1700	3600	1800
Capacity Analysis Module:												
Vol/Sat:	0.07	0.07	0.02	0.02	0.19	0.11	0.05	0.07	0.08	0.06	0.15	0.02
Crit Moves:	****				****		****				****	
Green/Cycle:	0.13	0.39	0.39	0.14	0.40	0.40	0.09	0.31	0.31	0.09	0.31	0.31
Volume/Cap:	0.49	0.17	0.06	0.16	0.49	0.26	0.49	0.24	0.27	0.65	0.49	0.07
Delay/Veh:	49.0	23.9	22.8	45.6	27.2	24.6	53.9	30.7	31.2	62.5	34.2	29.4
User DelAdj:	1.00	1.00	1.00	1.00	1.00	1.00	1.00	1.00	1.00	1.00	1.00	1.00
AdjDel/Veh:	49.0	23.9	22.8	45.6	27.2	24.6	53.9	30.7	31.2	62.5	34.2	29.4
LOS by Move:	D	C	C	D	C	C	D	C	C	E	C	C
HCM2kAvgQ:	4	3	1	1	9	4	3	3	4	4	8	1

Note: Queue reported is the number of cars per lane.

Traffix 8.0.0715 (c) 2008 Dowling Assoc. Licensed to URBAN CROSSROADS, IRVINE

SANBAG CMP Monitoring - City of Rancho Cucamonga
2009 Traffic Conditions
With Existing Geometry

Level Of Service Computation Report
2000 HCM Operations Method (Base Volume Alternative)

Intersection #17 Milliken Av. (NS) / Arrow Rte. (EW)

Cycle (sec):	120	Critical Vol./Cap.(X):	0.706
Loss Time (sec):	8	Average Delay (sec/veh):	39.5
Optimal Cycle:	120	Level Of Service:	D

Approach:	North Bound			South Bound			East Bound			West Bound		
Movement:	L	T	R	L	T	R	L	T	R	L	T	R
Control:	Protected			Protected			Protected			Protected		
Rights:	Include			Include			Include			Include		
Min. Green:	10	28	28	10	28	28	10	35	35	10	35	35
Y+R:	4.0	4.0	4.0	4.0	4.0	4.0	4.0	4.0	4.0	4.0	4.0	4.0
Lanes:	2 0	3 0	1	2 0	3 0	1	1 0	2 0	1	1 0	2 0	1
Volume Module:												
Base Vol:	210	1888	176	45	689	129	201	650	273	70	374	65
Growth Adj:	1.00	1.00	1.00	1.00	1.00	1.00	1.00	1.00	1.00	1.00	1.00	1.00
Initial Bse:	210	1888	176	45	689	129	201	650	273	70	374	65
User Adj:	1.00	1.00	1.00	1.00	1.00	1.00	1.00	1.00	1.00	1.00	1.00	1.00
PHF Adj:	0.95	0.95	0.95	0.95	0.95	0.95	0.95	0.95	0.95	0.95	0.95	0.95
PHF Volume:	221	1987	185	47	725	136	212	684	287	74	394	68
Reduct Vol:	0	0	0	0	0	0	0	0	0	0	0	0
Reduced Vol:	221	1987	185	47	725	136	212	684	287	74	394	68
PCE Adj:	1.00	1.00	1.00	1.00	1.00	1.00	1.00	1.00	1.00	1.00	1.00	1.00
MLF Adj:	1.03	1.10	1.00	1.03	1.10	1.00	1.00	1.05	1.00	1.00	1.05	1.00
FinalVolume:	228	2186	185	49	798	136	212	718	287	74	413	68
Saturation Flow Module:												
Sat/Lane:	1800	1800	1800	1800	1800	1800	1800	1800	1800	1800	1800	1800
Adjustment:	0.89	1.00	1.00	0.89	1.00	1.00	0.94	1.00	1.00	0.94	1.00	1.00
Lanes:	2.00	3.00	1.00	2.00	3.00	1.00	1.00	2.00	1.00	1.00	2.00	1.00
Final Sat.:	3200	5400	1800	3200	5400	1800	1700	3600	1800	1700	3600	1800
Capacity Analysis Module:												
Vol/Sat:	0.07	0.40	0.10	0.02	0.15	0.08	0.12	0.20	0.16	0.04	0.11	0.04
Crit Moves:		****		****			****				****	
Green/Cycle:	0.13	0.43	0.43	0.08	0.38	0.38	0.13	0.33	0.33	0.09	0.29	0.29
Volume/Cap:	0.53	0.95	0.24	0.18	0.39	0.20	0.95	0.61	0.49	0.46	0.39	0.13
Delay/Veh:	49.7	42.4	22.1	51.5	27.5	25.4	97.4	34.7	32.8	53.6	34.3	31.4
User DelAdj:	1.00	1.00	1.00	1.00	1.00	1.00	1.00	1.00	1.00	1.00	1.00	1.00
AdjDel/Veh:	49.7	42.4	22.1	51.5	27.5	25.4	97.4	34.7	32.8	53.6	34.3	31.4
LOS by Move:	D	D	C	D	C	C	F	C	C	D	C	C
HCM2kAvgQ:	4	28	4	1	7	3	9	11	8	3	6	2

Note: Queue reported is the number of cars per lane.

Traffix 8.0.0715 (c) 2008 Dowling Assoc. Licensed to URBAN CROSSROADS, IRVINE

SANBAG CMP Monitoring - City of Rancho Cucamonga
2009 Traffic Conditions
With Existing Geometry

Level Of Service Computation Report
2000 HCM Operations Method (Base Volume Alternative)

Intersection #18 Milliken Av. (NS) / 4th St. (EW)

Cycle (sec):	130	Critical Vol./Cap.(X):	0.491
Loss Time (sec):	8	Average Delay (sec/veh):	37.3
Optimal Cycle:	130	Level Of Service:	D

Approach:	North Bound			South Bound			East Bound			West Bound		
Movement:	L	T	R	L	T	R	L	T	R	L	T	R
Control:	Protected			Protected			Protected			Protected		
Rights:	Ovl			Include			Include			Include		
Min. Green:	10	39	39	10	39	39	10	42	42	10	42	42
Y+R:	4.0	4.0	4.0	4.0	4.0	4.0	4.0	4.0	4.0	4.0	4.0	4.0
Lanes:	2 0	4 0	1	2 0	3 1	0	2 0	3 0	1	2 0	3 0	1
Volume Module:												
Base Vol:	226	791	129	202	939	88	115	249	89	237	583	308
Growth Adj:	1.00	1.00	1.00	1.00	1.00	1.00	1.00	1.00	1.00	1.00	1.00	1.00
Initial Bse:	226	791	129	202	939	88	115	249	89	237	583	308
User Adj:	1.00	1.00	1.00	1.00	1.00	1.00	1.00	1.00	1.00	1.00	1.00	1.00
PHF Adj:	0.95	0.95	0.95	0.95	0.95	0.95	0.95	0.95	0.95	0.95	0.95	0.95
PHF Volume:	238	833	136	213	988	93	121	262	94	249	614	324
Reduct Vol:	0	0	0	0	0	0	0	0	0	0	0	0
Reduced Vol:	238	833	136	213	988	93	121	262	94	249	614	324
PCE Adj:	1.00	1.00	1.00	1.00	1.00	1.00	1.00	1.00	1.00	1.00	1.00	1.00
MLF Adj:	1.03	1.10	1.00	1.03	1.10	1.10	1.03	1.10	1.00	1.03	1.10	1.00
FinalVolume:	245	916	136	219	1087	102	125	288	94	257	675	324
Saturation Flow Module:												
Sat/Lane:	1800	1800	1800	1800	1800	1800	1800	1800	1800	1800	1800	1800
Adjustment:	0.89	1.00	1.00	0.89	1.00	1.00	0.89	1.00	1.00	0.89	1.00	1.00
Lanes:	2.00	4.00	1.00	2.00	3.66	0.34	2.00	3.00	1.00	2.00	3.00	1.00
Final Sat.:	3200	7200	1800	3200	6583	617	3200	5400	1800	3200	5400	1800
Capacity Analysis Module:												
Vol/Sat:	0.08	0.13	0.08	0.07	0.17	0.17	0.04	0.05	0.05	0.08	0.13	0.18
Crit Moves:	****				****		****					****
Green/Cycle:	0.16	0.39	0.48	0.10	0.34	0.34	0.08	0.36	0.36	0.09	0.37	0.37
Volume/Cap:	0.49	0.32	0.16	0.68	0.49	0.49	0.49	0.15	0.15	0.90	0.34	0.49
Delay/Veh:	50.9	27.6	19.0	62.3	34.4	34.4	58.8	28.4	28.4	88.5	29.9	32.4
User DelAdj:	1.00	1.00	1.00	1.00	1.00	1.00	1.00	1.00	1.00	1.00	1.00	1.00
AdjDel/Veh:	50.9	27.6	19.0	62.3	34.4	34.4	58.8	28.4	28.4	88.5	29.9	32.4
LOS by Move:	D	C	B	E	C	C	E	C	C	F	C	C
HCM2kAvgQ:	5	6	3	5	9	9	3	3	2	9	6	10

Note: Queue reported is the number of cars per lane.

Traffix 8.0.0715 (c) 2008 Dowling Assoc. Licensed to URBAN CROSSROADS, IRVINE

SANBAG CMP Monitoring - City of Rancho Cucamonga
2009 Traffic Conditions
With Existing Geometry

Level Of Service Computation Report
2000 HCM Operations Method (Base Volume Alternative)

Intersection #18 Milliken Av. (NS) / 4th St. (EW)

Cycle (sec):	130	Critical Vol./Cap.(X):	0.691
Loss Time (sec):	8	Average Delay (sec/veh):	44.0
Optimal Cycle:	130	Level Of Service:	D

Approach:	North Bound			South Bound			East Bound			West Bound		
Movement:	L	T	R	L	T	R	L	T	R	L	T	R
Control:	Protected			Protected			Protected			Protected		
Rights:	Ovl			Include			Include			Include		
Min. Green:	10	39	39	10	39	39	10	42	42	10	42	42
Y+R:	4.0	4.0	4.0	4.0	4.0	4.0	4.0	4.0	4.0	4.0	4.0	4.0
Lanes:	2 0	4 0	1	2 0	3 1	0	2 0	3 0	1	2 0	3 0	1
Volume Module:												
Base Vol:	292	1152	352	475	1030	140	353	680	195	299	510	312
Growth Adj:	1.00	1.00	1.00	1.00	1.00	1.00	1.00	1.00	1.00	1.00	1.00	1.00
Initial Bse:	292	1152	352	475	1030	140	353	680	195	299	510	312
User Adj:	1.00	1.00	1.00	1.00	1.00	1.00	1.00	1.00	1.00	1.00	1.00	1.00
PHF Adj:	0.95	0.95	0.95	0.95	0.95	0.95	0.95	0.95	0.95	0.95	0.95	0.95
PHF Volume:	307	1213	371	500	1084	147	372	716	205	315	537	328
Reduct Vol:	0	0	0	0	0	0	0	0	0	0	0	0
Reduced Vol:	307	1213	371	500	1084	147	372	716	205	315	537	328
PCE Adj:	1.00	1.00	1.00	1.00	1.00	1.00	1.00	1.00	1.00	1.00	1.00	1.00
MLF Adj:	1.03	1.10	1.00	1.03	1.10	1.10	1.03	1.10	1.00	1.03	1.10	1.00
FinalVolume:	317	1334	371	515	1193	162	383	787	205	324	591	328
Saturation Flow Module:												
Sat/Lane:	1800	1800	1800	1800	1800	1800	1800	1800	1800	1800	1800	1800
Adjustment:	0.89	1.00	1.00	0.89	1.00	1.00	0.89	1.00	1.00	0.89	1.00	1.00
Lanes:	2.00	4.00	1.00	2.00	3.52	0.48	2.00	3.00	1.00	2.00	3.00	1.00
Final Sat.:	3200	7200	1800	3200	6338	862	3200	5400	1800	3200	5400	1800
Capacity Analysis Module:												
Vol/Sat:	0.10	0.19	0.21	0.16	0.19	0.19	0.12	0.15	0.11	0.10	0.11	0.18
Crit Moves:		****		****			****					****
Green/Cycle:	0.12	0.30	0.41	0.18	0.36	0.36	0.13	0.35	0.35	0.11	0.32	0.32
Volume/Cap:	0.83	0.62	0.50	0.89	0.52	0.52	0.89	0.42	0.33	0.93	0.34	0.56
Delay/Veh:	70.1	39.6	29.1	67.6	32.8	32.8	75.1	32.5	31.5	87.6	33.6	37.7
User DelAdj:	1.00	1.00	1.00	1.00	1.00	1.00	1.00	1.00	1.00	1.00	1.00	1.00
AdjDel/Veh:	70.1	39.6	29.1	67.6	32.8	32.8	75.1	32.5	31.5	87.6	33.6	37.7
LOS by Move:	E	D	C	E	C	C	E	C	C	F	C	D
HCM2kAvgQ:	9	12	11	12	10	10	11	8	6	10	6	11

Note: Queue reported is the number of cars per lane.

Traffix 8.0.0715 (c) 2008 Dowling Assoc. Licensed to URBAN CROSSROADS, IRVINE

SANBAG CMP Monitoring - City of Rancho Cucamonga
2009 Traffic Conditions
With Existing Geometry

Level Of Service Computation Report
2000 HCM Operations Method (Base Volume Alternative)

Intersection #19 Etiwanda Av. (NS) / Baseline Rd. (EW)

Cycle (sec):	90	Critical Vol./Cap.(X):	0.488
Loss Time (sec):	8	Average Delay (sec/veh):	26.8
Optimal Cycle:	90	Level Of Service:	C

Approach:	North Bound			South Bound			East Bound			West Bound		
Movement:	L	T	R	L	T	R	L	T	R	L	T	R
Control:	Protected			Protected			Protected			Protected		
Rights:	Ovl			Include			Include			Include		
Min. Green:	10	32	32	10	32	32	10	24	24	10	24	24
Y+R:	4.0	4.0	4.0	4.0	4.0	4.0	4.0	4.0	4.0	4.0	4.0	4.0
Lanes:	2 0	1 0	1	1 0	1 1	0	1 0	2 1	0	2 0	1 1	0
Volume Module:												
Base Vol:	73	233	84	117	195	173	137	404	71	122	376	116
Growth Adj:	1.00	1.00	1.00	1.00	1.00	1.00	1.00	1.00	1.00	1.00	1.00	1.00
Initial Bse:	73	233	84	117	195	173	137	404	71	122	376	116
User Adj:	1.00	1.00	1.00	1.00	1.00	1.00	1.00	1.00	1.00	1.00	1.00	1.00
PHF Adj:	0.95	0.95	0.95	0.95	0.95	0.95	0.95	0.95	0.95	0.95	0.95	0.95
PHF Volume:	77	245	88	123	205	182	144	425	75	128	396	122
Reduct Vol:	0	0	0	0	0	0	0	0	0	0	0	0
Reduced Vol:	77	245	88	123	205	182	144	425	75	128	396	122
PCE Adj:	1.00	1.00	1.00	1.00	1.00	1.00	1.00	1.00	1.00	1.00	1.00	1.00
MLF Adj:	1.03	1.00	1.00	1.00	1.05	1.05	1.00	1.10	1.10	1.03	1.05	1.05
FinalVolume:	79	245	88	123	216	191	144	468	82	132	416	128
Saturation Flow Module:												
Sat/Lane:	1800	1800	1800	1800	1800	1800	1800	1800	1800	1800	1800	1800
Adjustment:	0.89	1.00	1.00	0.94	1.00	1.00	0.94	1.00	1.00	0.89	1.00	1.00
Lanes:	2.00	1.00	1.00	1.00	1.06	0.94	1.00	2.55	0.45	2.00	1.53	0.47
Final Sat.:	3200	1800	1800	1700	1908	1692	1700	4593	807	3200	2751	849
Capacity Analysis Module:												
Vol/Sat:	0.02	0.14	0.05	0.07	0.11	0.11	0.08	0.10	0.10	0.04	0.15	0.15
Crit Moves:		****		****			****				****	
Green/Cycle:	0.12	0.36	0.48	0.13	0.37	0.37	0.15	0.30	0.30	0.13	0.27	0.27
Volume/Cap:	0.21	0.38	0.10	0.55	0.31	0.31	0.55	0.34	0.34	0.33	0.55	0.55
Delay/Veh:	36.4	22.0	12.8	39.7	20.2	20.2	37.9	24.7	24.7	36.4	28.8	28.8
User DelAdj:	1.00	1.00	1.00	1.00	1.00	1.00	1.00	1.00	1.00	1.00	1.00	1.00
AdjDel/Veh:	36.4	22.0	12.8	39.7	20.2	20.2	37.9	24.7	24.7	36.4	28.8	28.8
LOS by Move:	D	C	B	D	C	C	D	C	C	D	C	C
HCM2kAvgQ:	1	5	1	4	4	4	4	4	4	2	7	7

Note: Queue reported is the number of cars per lane.

Traffix 8.0.0715 (c) 2008 Dowling Assoc. Licensed to URBAN CROSSROADS, IRVINE

SANBAG CMP Monitoring - City of Rancho Cucamonga
2009 Traffic Conditions
With Existing Geometry

Level Of Service Computation Report
2000 HCM Operations Method (Base Volume Alternative)

Intersection #19 Etiwanda Av. (NS) / Baseline Rd. (EW)

Cycle (sec):	90	Critical Vol./Cap.(X):	0.414
Loss Time (sec):	8	Average Delay (sec/veh):	25.5
Optimal Cycle:	90	Level Of Service:	C

Approach:	North Bound			South Bound			East Bound			West Bound		
Movement:	L	T	R	L	T	R	L	T	R	L	T	R
Control:	Protected			Protected			Protected			Protected		
Rights:	Ovl			Include			Include			Include		
Min. Green:	10	32	32	10	32	32	10	24	24	10	24	24
Y+R:	4.0	4.0	4.0	4.0	4.0	4.0	4.0	4.0	4.0	4.0	4.0	4.0
Lanes:	2 0 1		0 1	1 0 1		1 0	1 0 2		1 0	2 0 1		1 0
Volume Module:												
Base Vol:	116	191	193	41	91	50	88	558	74	144	532	74
Growth Adj:	1.00	1.00	1.00	1.00	1.00	1.00	1.00	1.00	1.00	1.00	1.00	1.00
Initial Bse:	116	191	193	41	91	50	88	558	74	144	532	74
User Adj:	1.00	1.00	1.00	1.00	1.00	1.00	1.00	1.00	1.00	1.00	1.00	1.00
PHF Adj:	0.95	0.95	0.95	0.95	0.95	0.95	0.95	0.95	0.95	0.95	0.95	0.95
PHF Volume:	122	201	203	43	96	53	93	587	78	152	560	78
Reduct Vol:	0	0	0	0	0	0	0	0	0	0	0	0
Reduced Vol:	122	201	203	43	96	53	93	587	78	152	560	78
PCE Adj:	1.00	1.00	1.00	1.00	1.00	1.00	1.00	1.00	1.00	1.00	1.00	1.00
MLF Adj:	1.03	1.00	1.00	1.00	1.05	1.05	1.00	1.10	1.10	1.03	1.05	1.05
FinalVolume:	126	201	203	43	101	55	93	646	86	156	588	82
Saturation Flow Module:												
Sat/Lane:	1800	1800	1800	1800	1800	1800	1800	1800	1800	1800	1800	1800
Adjustment:	0.89	1.00	1.00	0.94	1.00	1.00	0.94	1.00	1.00	0.89	1.00	1.00
Lanes:	2.00	1.00	1.00	1.00	1.29	0.71	1.00	2.65	0.35	2.00	1.76	0.24
Final Sat.:	3200	1800	1800	1700	2323	1277	1700	4768	632	3200	3160	440
Capacity Analysis Module:												
Vol/Sat:	0.04	0.11	0.11	0.03	0.04	0.04	0.05	0.14	0.14	0.05	0.19	0.19
Crit Moves:		****		****			****				****	
Green/Cycle:	0.11	0.36	0.49	0.11	0.36	0.36	0.11	0.31	0.31	0.13	0.33	0.33
Volume/Cap:	0.35	0.31	0.23	0.23	0.12	0.12	0.49	0.43	0.43	0.37	0.56	0.56
Delay/Veh:	37.6	21.3	13.5	37.1	19.6	19.6	39.6	24.7	24.7	36.3	25.2	25.2
User DelAdj:	1.00	1.00	1.00	1.00	1.00	1.00	1.00	1.00	1.00	1.00	1.00	1.00
AdjDel/Veh:	37.6	21.3	13.5	37.1	19.6	19.6	39.6	24.7	24.7	36.3	25.2	25.2
LOS by Move:	D	C	B	D	B	B	D	C	C	D	C	C
HCM2kAvgQ:	2	4	3	1	1	1	3	5	5	3	8	8

Note: Queue reported is the number of cars per lane.

Traffix 8.0.0715 (c) 2008 Dowling Assoc. Licensed to URBAN CROSSROADS, IRVINE

SANBAG CMP Monitoring - City of Rancho Cucamonga
2009 Traffic Conditions
With Existing Geometry

Level Of Service Computation Report
2000 HCM Operations Method (Base Volume Alternative)

Intersection #20 Etiwanda Av. (NS) / Foothill Bl. (EW)

Cycle (sec):	100	Critical Vol./Cap.(X):	0.551
Loss Time (sec):	8	Average Delay (sec/veh):	29.5
Optimal Cycle:	100	Level Of Service:	C

Approach:	North Bound			South Bound			East Bound			West Bound		
Movement:	L	T	R	L	T	R	L	T	R	L	T	R
Control:	Protected			Protected			Protected			Protected		
Rights:	Include			Include			Ovl			Include		
Min. Green:	10	37	37	10	37	37	10	29	29	10	29	29
Y+R:	4.0	4.0	4.0	4.0	4.0	4.0	4.0	4.0	4.0	4.0	4.0	4.0
Lanes:	1 0	1 0	1	1 0	1	1 0	2 0	2 0	1	2 0	2 0	1
Volume Module:												
Base Vol:	127	148	71	60	297	227	85	479	157	179	776	59
Growth Adj:	1.00	1.00	1.00	1.00	1.00	1.00	1.00	1.00	1.00	1.00	1.00	1.00
Initial Bse:	127	148	71	60	297	227	85	479	157	179	776	59
User Adj:	1.00	1.00	1.00	1.00	1.00	1.00	1.00	1.00	1.00	1.00	1.00	1.00
PHF Adj:	0.95	0.95	0.95	0.95	0.95	0.95	0.95	0.95	0.95	0.95	0.95	0.95
PHF Volume:	134	156	75	63	313	239	89	504	165	188	817	62
Reduct Vol:	0	0	0	0	0	0	0	0	0	0	0	0
Reduced Vol:	134	156	75	63	313	239	89	504	165	188	817	62
PCE Adj:	1.00	1.00	1.00	1.00	1.00	1.00	1.00	1.00	1.00	1.00	1.00	1.00
MLF Adj:	1.00	1.00	1.00	1.00	1.05	1.05	1.03	1.05	1.00	1.03	1.05	1.00
FinalVolume:	134	156	75	63	328	251	92	529	165	194	858	62
Saturation Flow Module:												
Sat/Lane:	1800	1800	1800	1800	1800	1800	1800	1800	1800	1800	1800	1800
Adjustment:	0.94	1.00	1.00	0.94	1.00	1.00	0.89	1.00	1.00	0.89	1.00	1.00
Lanes:	1.00	1.00	1.00	1.00	1.13	0.87	2.00	2.00	1.00	2.00	2.00	1.00
Final Sat.:	1700	1800	1800	1700	2040	1560	3200	3600	1800	3200	3600	1800
Capacity Analysis Module:												
Vol/Sat:	0.08	0.09	0.04	0.04	0.16	0.16	0.03	0.15	0.09	0.06	0.24	0.03
Crit Moves:	****				****		****				****	
Green/Cycle:	0.11	0.38	0.38	0.10	0.37	0.37	0.10	0.33	0.44	0.11	0.34	0.34
Volume/Cap:	0.70	0.23	0.11	0.36	0.43	0.43	0.29	0.45	0.21	0.54	0.70	0.10
Delay/Veh:	54.2	21.3	20.2	43.1	23.9	23.9	42.2	26.9	17.5	43.6	30.6	22.7
User DelAdj:	1.00	1.00	1.00	1.00	1.00	1.00	1.00	1.00	1.00	1.00	1.00	1.00
AdjDel/Veh:	54.2	21.3	20.2	43.1	23.9	23.9	42.2	26.9	17.5	43.6	30.6	22.7
LOS by Move:	D	C	C	D	C	C	D	C	B	D	C	C
HCM2kAvgQ:	4	3	1	2	6	6	1	6	3	4	13	1

Note: Queue reported is the number of cars per lane.

Traffix 8.0.0715 (c) 2008 Dowling Assoc. Licensed to URBAN CROSSROADS, IRVINE

SANBAG CMP Monitoring - City of Rancho Cucamonga
2009 Traffic Conditions
With Existing Geometry

Level Of Service Computation Report
2000 HCM Operations Method (Base Volume Alternative)

****

Intersection #20 Etiwanda Av. (NS) / Foothill Bl. (EW)

****

Cycle (sec):	100	Critical Vol./Cap.(X):	0.604	
Loss Time (sec):	8	Average Delay (sec/veh):	35.5	
Optimal Cycle:	100	Level Of Service:	D	

****

Approach:	North Bound			South Bound			East Bound			West Bound		
Movement:	L	T	R	L	T	R	L	T	R	L	T	R
Control:	Protected			Protected			Protected			Protected		
Rights:	Include			Include			Ovl			Include		
Min. Green:	10	37	37	10	37	37	10	29	29	10	29	29
Y+R:	4.0	4.0	4.0	4.0	4.0	4.0	4.0	4.0	4.0	4.0	4.0	4.0
Lanes:	1 0	1 0	1	1 0	1 1	0	2 0	2 0	1	2 0	2 0	1
Volume Module:												
Base Vol:	202	335	201	52	196	190	236	881	143	122	697	77
Growth Adj:	1.00	1.00	1.00	1.00	1.00	1.00	1.00	1.00	1.00	1.00	1.00	1.00
Initial Bse:	202	335	201	52	196	190	236	881	143	122	697	77
User Adj:	1.00	1.00	1.00	1.00	1.00	1.00	1.00	1.00	1.00	1.00	1.00	1.00
PHF Adj:	0.95	0.95	0.95	0.95	0.95	0.95	0.95	0.95	0.95	0.95	0.95	0.95
PHF Volume:	213	353	212	55	206	200	248	927	151	128	734	81
Reduct Vol:	0	0	0	0	0	0	0	0	0	0	0	0
Reduced Vol:	213	353	212	55	206	200	248	927	151	128	734	81
PCE Adj:	1.00	1.00	1.00	1.00	1.00	1.00	1.00	1.00	1.00	1.00	1.00	1.00
MLF Adj:	1.00	1.00	1.00	1.00	1.05	1.05	1.03	1.05	1.00	1.03	1.05	1.00
FinalVolume:	213	353	212	55	217	210	256	974	151	132	770	81
Saturation Flow Module:												
Sat/Lane:	1800	1800	1800	1800	1800	1800	1800	1800	1800	1800	1800	1800
Adjustment:	0.94	1.00	1.00	0.94	1.00	1.00	0.89	1.00	1.00	0.89	1.00	1.00
Lanes:	1.00	1.00	1.00	1.00	1.02	0.98	2.00	2.00	1.00	2.00	2.00	1.00
Final Sat.:	1700	1800	1800	1700	1828	1772	3200	3600	1800	3200	3600	1800
Capacity Analysis Module:												
Vol/Sat:	0.13	0.20	0.12	0.03	0.12	0.12	0.08	0.27	0.08	0.04	0.21	0.05
Crit Moves:	****				****			****		****		
Green/Cycle:	0.14	0.40	0.40	0.11	0.37	0.37	0.10	0.31	0.45	0.10	0.30	0.30
Volume/Cap:	0.88	0.49	0.29	0.30	0.32	0.32	0.76	0.88	0.19	0.41	0.71	0.15
Delay/Veh:	70.6	22.7	20.4	41.9	22.7	22.7	53.7	41.1	16.6	43.1	33.0	25.6
User DelAdj:	1.00	1.00	1.00	1.00	1.00	1.00	1.00	1.00	1.00	1.00	1.00	1.00
AdjDel/Veh:	70.6	22.7	20.4	41.9	22.7	22.7	53.7	41.1	16.6	43.1	33.0	25.6
LOS by Move:	E	C	C	D	C	C	D	D	B	D	C	C
HCM2kAvgQ:	7	8	4	2	5	5	4	15	3	3	12	2

****

Note: Queue reported is the number of cars per lane.

****

Traffix 8.0.0715 (c) 2008 Dowling Assoc. Licensed to URBAN CROSSROADS, IRVINE

SANBAG CMP Monitoring - City of Rancho Cucamonga
2009 Traffic Conditions
With Existing Geometry

Level Of Service Computation Report
2000 HCM Operations Method (Base Volume Alternative)

Intersection #21 Etiwanda Av. (NS) / Arrow Rte. (EW)

Cycle (sec): 130 Critical Vol./Cap.(X): 0.860
Loss Time (sec): 8 Average Delay (sec/veh): 39.0
Optimal Cycle: 130 Level Of Service: D

Approach:	North Bound			South Bound			East Bound			West Bound		
Movement:	L	T	R	L	T	R	L	T	R	L	T	R
Control:	Prot+Permit			Prot+Permit			Prot+Permit			Prot+Permit		
Rights:	Include			Ovl			Include			Include		
Min. Green:	10	25	25	10	25	25	10	28	28	10	28	28
Y+R:	4.0	4.0	4.0	4.0	4.0	4.0	4.0	4.0	4.0	4.0	4.0	4.0
Lanes:	1 0	0	1 0	1 0	1	0 1	1 0	1	0 1	1 0	1	1 0
Volume Module:												
Base Vol:	181	131	30	49	314	243	59	111	120	108	329	45
Growth Adj:	1.00	1.00	1.00	1.00	1.00	1.00	1.00	1.00	1.00	1.00	1.00	1.00
Initial Bse:	181	131	30	49	314	243	59	111	120	108	329	45
User Adj:	1.00	1.00	1.00	1.00	1.00	1.00	1.00	1.00	1.00	1.00	1.00	1.00
PHF Adj:	0.95	0.95	0.95	0.95	0.95	0.95	0.95	0.95	0.95	0.95	0.95	0.95
PHF Volume:	191	138	32	52	331	256	62	117	126	114	346	47
Reduct Vol:	0	0	0	0	0	0	0	0	0	0	0	0
Reduced Vol:	191	138	32	52	331	256	62	117	126	114	346	47
PCE Adj:	1.00	1.00	1.00	1.00	1.00	1.00	1.00	1.00	1.00	1.00	1.00	1.00
MLF Adj:	1.00	1.00	1.00	1.00	1.00	1.00	1.00	1.00	1.00	1.00	1.05	1.05
FinalVolume:	191	138	32	52	331	256	62	117	126	114	364	50
Saturation Flow Module:												
Sat/Lane:	1800	1800	1800	1800	1800	1800	1800	1800	1800	1800	1800	1800
Adjustment:	0.94	1.00	1.00	0.94	1.00	1.00	0.94	1.00	1.00	0.94	1.00	1.00
Lanes:	1.00	0.81	0.19	1.00	1.00	1.00	1.00	1.00	1.00	1.00	1.76	0.24
Final Sat.:	1700	1465	335	1700	1800	1800	1700	1800	1800	1700	3167	433
Capacity Analysis Module:												
Vol/Sat:	0.00	0.09	0.09	0.00	0.18	0.14	0.00	0.06	0.07	0.00	0.11	0.11
Crit Moves:	****				****		****				****	
Green/Cycle:	0.24	0.44	0.44	0.18	0.39	0.46	0.08	0.23	0.23	0.08	0.24	0.24
Volume/Cap:	0.48	0.21	0.21	0.17	0.48	0.31	0.47	0.28	0.30	0.80	0.48	0.48
Delay/Veh:	43.7	22.4	22.4	45.6	30.6	22.1	60.2	41.1	41.4	85.0	42.7	42.7
User DelAdj:	1.00	1.00	1.00	1.00	1.00	1.00	1.00	1.00	1.00	1.00	1.00	1.00
AdjDel/Veh:	43.7	22.4	22.4	45.6	30.6	22.1	60.2	41.1	41.4	85.0	42.7	42.7
LOS by Move:	D	C	C	D	C	C	E	D	D	F	D	D
HCM2kAvgQ:	7	4	4	2	10	6	3	4	4	7	7	7

Note: Queue reported is the number of cars per lane.

Traffix 8.0.0715 (c) 2008 Dowling Assoc. Licensed to URBAN CROSSROADS, IRVINE

SANBAG CMP Monitoring - City of Rancho Cucamonga
2009 Traffic Conditions
With Existing Geometry

Level Of Service Computation Report
2000 HCM Operations Method (Base Volume Alternative)

Intersection #21 Etiwanda Av. (NS) / Arrow Rte. (EW)

Cycle (sec): 130 Critical Vol./Cap.(X): 1.039
Loss Time (sec): 8 Average Delay (sec/veh): 41.3
Optimal Cycle: 130 Level Of Service: D

Approach:	North Bound			South Bound			East Bound			West Bound		
Movement:	L	T	R	L	T	R	L	T	R	L	T	R
Control:	Prot+Permit			Prot+Permit			Prot+Permit			Prot+Permit		
Rights:	Include			Ovl			Include			Include		
Min. Green:	10	25	25	10	25	25	10	28	28	10	28	28
Y+R:	4.0	4.0	4.0	4.0	4.0	4.0	4.0	4.0	4.0	4.0	4.0	4.0
Lanes:	1 0	0	1 0	1 0	1	0 1	1 0	1	0 1	1 0	1	1 0
Volume Module:												
Base Vol:	144	490	78	59	180	93	222	403	195	72	215	111
Growth Adj:	1.00	1.00	1.00	1.00	1.00	1.00	1.00	1.00	1.00	1.00	1.00	1.00
Initial Bse:	144	490	78	59	180	93	222	403	195	72	215	111
User Adj:	1.00	1.00	1.00	1.00	1.00	1.00	1.00	1.00	1.00	1.00	1.00	1.00
PHF Adj:	0.95	0.95	0.95	0.95	0.95	0.95	0.95	0.95	0.95	0.95	0.95	0.95
PHF Volume:	152	516	82	62	189	98	234	424	205	76	226	117
Reduct Vol:	0	0	0	0	0	0	0	0	0	0	0	0
Reduced Vol:	152	516	82	62	189	98	234	424	205	76	226	117
PCE Adj:	1.00	1.00	1.00	1.00	1.00	1.00	1.00	1.00	1.00	1.00	1.00	1.00
MLF Adj:	1.00	1.00	1.00	1.00	1.00	1.00	1.00	1.00	1.00	1.00	1.05	1.05
FinalVolume:	152	516	82	62	189	98	234	424	205	76	238	123
Saturation Flow Module:												
Sat/Lane:	1800	1800	1800	1800	1800	1800	1800	1800	1800	1800	1800	1800
Adjustment:	0.94	1.00	1.00	0.94	1.00	1.00	0.94	1.00	1.00	0.94	1.00	1.00
Lanes:	1.00	0.86	0.14	1.00	1.00	1.00	1.00	1.00	1.00	1.00	1.32	0.68
Final Sat.:	1700	1553	247	1700	1800	1800	1700	1800	1800	1700	2374	1226
Capacity Analysis Module:												
Vol/Sat:	0.00	0.33	0.33	0.00	0.11	0.05	0.00	0.24	0.11	0.00	0.10	0.10
Crit Moves:		****		****				****		****		
Green/Cycle:	0.17	0.46	0.46	0.08	0.36	0.55	0.19	0.30	0.30	0.10	0.22	0.22
Volume/Cap:	0.53	0.73	0.73	0.47	0.29	0.10	0.73	0.77	0.37	0.45	0.46	0.46
Delay/Veh:	51.1	32.0	32.0	60.2	29.6	13.7	57.6	47.8	35.9	57.0	44.9	44.9
User DelAdj:	1.00	1.00	1.00	1.00	1.00	1.00	1.00	1.00	1.00	1.00	1.00	1.00
AdjDel/Veh:	51.1	32.0	32.0	60.2	29.6	13.7	57.6	47.8	35.9	57.0	44.9	44.9
LOS by Move:	D	C	C	E	C	B	E	D	D	E	D	D
HCM2kAvgQ:	6	20	20	2	5	2	9	15	6	3	7	7

Note: Queue reported is the number of cars per lane.

Traffix 8.0.0715 (c) 2008 Dowling Assoc. Licensed to URBAN CROSSROADS, IRVINE