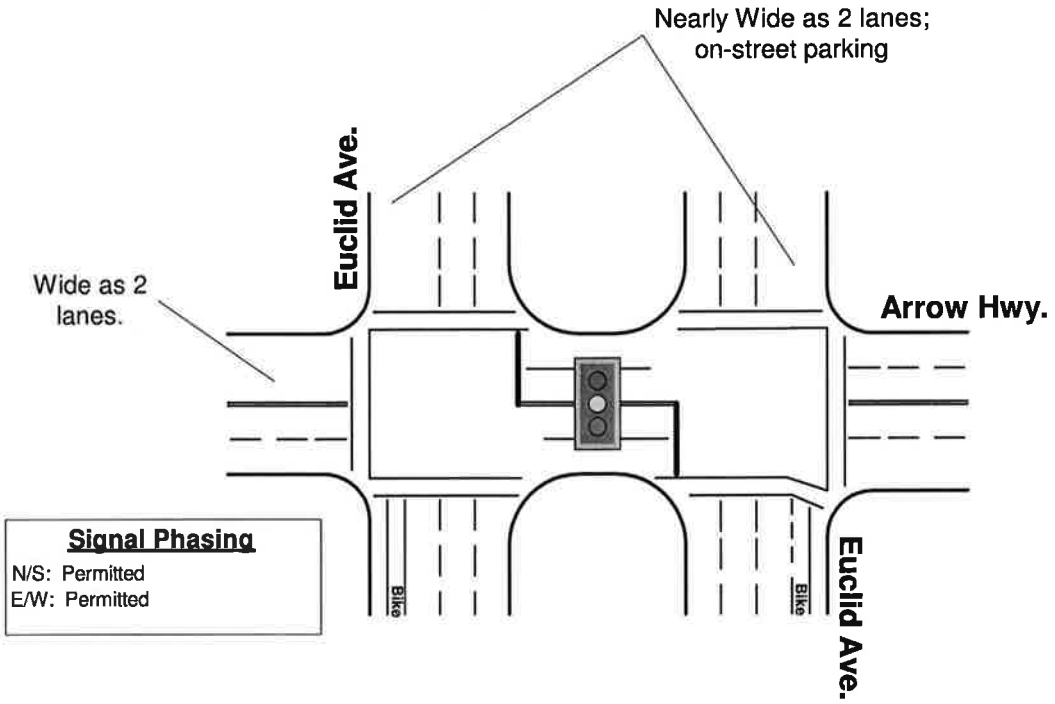

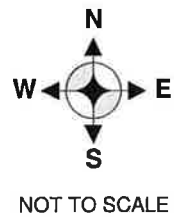

City of Upland
Euclid Avenue and Arrow Highway

0602_Euclid_Arrow

Counts Unlimited Inc.
25286 Jaclyn Avenue
Moreno Valley, CA 92557
951-485-7934

City of Upland
N/S: Euclid Avenue
E/W: Arrow Highway
Weather: Sunny

File Name : UPLEUARAM
Site Code : 9117035
Start Date : 5/6/2009
Page No : 1

Groups Printed- Passenger Vehicles - Large 2 Axle Vehicles - 3 Axle Vehicles - 4+ Axle Trucks

	Euclid Avenue Southbound					Arrow Highway Westbound					Euclid Avenue Northbound					Arrow Highway Eastbound					
Start Time	Left	Thru	Right	RoR	App. Total	Left	Thru	Right	RoR	App. Total	Left	Thru	Right	RoR	App. Total	Left	Thru	Right	RoR	App. Total	Int. Total
07:00 AM	7	272	5	0	284	25	58	7	6	96	2	170	29	13	214	8	33	10	3	54	648
07:15 AM	6	331	11	1	349	32	68	10	4	114	21	201	25	14	261	6	64	12	4	86	810
07:30 AM	5	391	9	0	405	22	106	9	0	137	33	245	27	9	314	9	87	26	1	123	979
07:45 AM	4	361	9	0	374	33	106	9	2	150	13	211	41	14	279	9	93	15	5	122	925
Total	22	1355	34	1	1412	112	338	35	12	497	69	827	122	50	1068	32	277	63	13	385	3362
08:00 AM	8	300	12	3	323	43	61	8	1	113	16	216	37	17	286	8	52	8	2	70	792
08:15 AM	13	255	11	0	279	31	67	6	4	108	6	208	18	11	243	6	51	11	3	71	701
08:30 AM	13	262	10	3	288	35	59	14	1	109	7	156	34	12	209	3	42	9	1	55	661
08:45 AM	14	259	9	3	285	35	56	14	1	106	13	230	24	18	285	7	58	16	4	85	761
Total	48	1076	42	9	1175	144	243	42	7	436	42	810	113	58	1023	24	203	44	10	281	2915
Grand Total	70	2431	76	10	2587	256	581	77	19	933	111	1637	235	108	2091	56	480	107	23	666	6277
Apprch %	2.7	94	2.9	0.4		27.4	62.3	8.3	2		5.3	78.3	11.2	5.2		8.4	72.1	16.1	3.5		
Total %	1.1	38.7	1.2	0.2	41.2	4.1	9.3	1.2	0.3	14.9	1.8	26.1	3.7	1.7	33.3	0.9	7.6	1.7	0.4	10.6	
Passenger Vehicles		2382										1561									
% Passenger Vehicles	100	98	89.5	100	97.8	98.4	96.7	94.8	100	97.1	97.3	95.4	97.9	98.1	95.9	94.6	96	99.1	100	96.5	96.9
Large 2 Axle Vehicles																					
% Large 2 Axle Vehicles	0	1.4	9.2	0	1.6	0.8	2.9	5.2	0	2.5	0.9	2.4	1.7	0.9	2.2	5.4	3.3	0	0	2.9	2.1
3 Axle Vehicles	0	10	0	0	10	1	1	0	0	2	2	26	0	1	29	0	3	0	0	3	44
% 3 Axle Vehicles	0	0.4	0	0	0.4	0.4	0.2	0	0	0.2	1.8	1.6	0	0.9	1.4	0	0.6	0	0	0.5	0.7
4+ Axle Trucks	0	4	1	0	5	1	1	0	0	2	0	10	1	0	11	0	0	1	0	1	19
% 4+ Axle Trucks																					

	Euclid Avenue Southbound					Arrow Highway Westbound					Euclid Avenue Northbound					Arrow Highway Eastbound					
Start Time	Left	Thru	Right	RoR	App. Total	Left	Thru	Right	RoR	App. Total	Left	Thru	Right	RoR	App. Total	Left	Thru	Right	RoR	App. Total	Int. Total
Peak Hour Analysis From 07:00 AM to 08:45 AM - Peak 1 of 1																					
Peak Hour for Entire Intersection Begins at 07:15 AM																					
07:15 AM	6	331	11	1	349	32	68	10	4	114	21	201	25	14	261	6	64	12	4	86	810
07:30 AM	5	391	9	0	405	22	106	9	0	137	33	245	27	9	314	9	87	26	1	123	979
07:45 AM	4	361	9	0	374	33	106	9	2	150	13	211	41	14	279	9	93	15	5	122	925
08:00 AM	8	300	12	3	323	43	61	8	1	113	16	216	37	17	286	8	52	8	2	70	792
Total Volume	23	1383	41	4	1451	130	341	36	7	514	83	873	130	54	1140	32	296	61	12	401	3506
% App. Total	1.6	95.3	2.8	0.3		25.3	66.3	7	1.4		7.3	76.6	11.4	4.7		8	73.8	15.2	3		
PHF	.719	.884	.854	.333	.896	.756	.804	.900	.438	.857	.629	.891	.793	.794	.908	.889	.796	.587	.600	.815	.895

Counts Unlimited Inc.
25286 Jaclyn Avenue
Moreno Valley, CA 92557
951-485-7934

City of Upland
N/S: Euclid Avenue
E/W: Arrow Highway
Weather: Sunny

File Name : UPLEUARAM
Site Code : 9117035
Start Date : 5/6/2009
Page No : 2

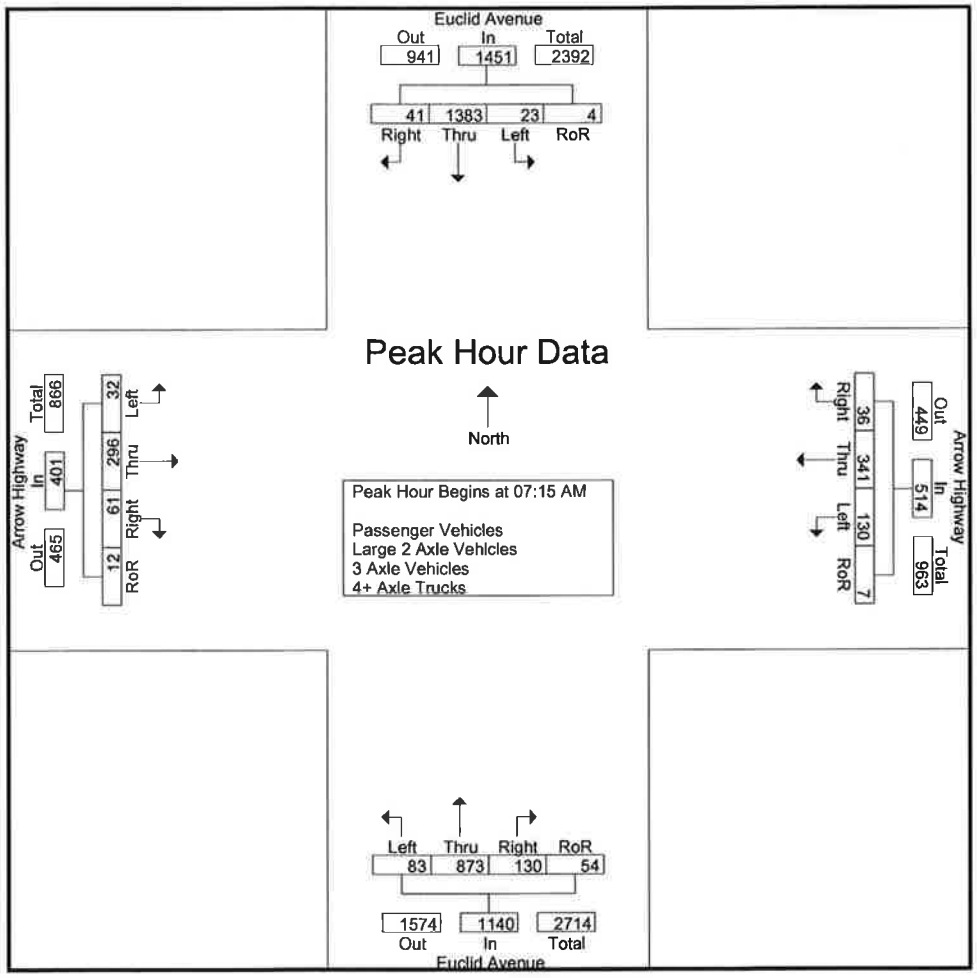

Peak Hour Analysis From 07:00 AM to 08:45 AM - Peak 1 of 1

Peak Hour for Each Approach Begins at:

	07:15 AM					07:15 AM					07:15 AM					07:15 AM				
+0 mins.	6	331	11	1	349	32	68	**10**	**4**	114	21	201	25	14	261	6	64	12	4	86
+15 mins.	5	**391**	9	0	**405**	22	**106**	9	**0**	137	**33**	**245**	27	9	**314**	**9**	87	**26**	1	**123**
+30 mins.	4	361	9	0	374	33	106	9	2	**150**	13	211	**41**	14	279	9	**93**	15	**5**	122
+45 mins.	**8**	300	**12**	**3**	323	**43**	61	8	1	113	16	216	37	**17**	286	8	52	8	2	**70**
Total Volume	23	1383	41	4	1451	130	341	36	7	514	83	873	130	54	1140	32	296	61	12	401
% App. Total	1.6	95.3	2.8	0.3		25.3	66.3	7	1.4		7.3	76.6	11.4	4.7		8	73.8	15.2	3	
PHF	.719	.884	.854	.333	.896	.756	.804	.900	.438	.857	.629	.891	.793	.794	.908	.889	.796	.587	.600	.815

Counts Unlimited Inc.
25286 Jaclyn Avenue
Moreno Valley, CA 92557
951-485-7934

City of Upland
N/S: Euclid Avenue
E/W: Arrow Highway
Weather: Sunny

File Name : UPLEUARAM
Site Code : 9117035
Start Date : 5/6/2009
Page No : 1

Groups Printed- Passenger Vehicles

	Euclid Avenue Southbound					Arrow Highway Westbound					Euclid Avenue Northbound					Arrow Highway Eastbound					
Start Time	Left	Thru	Right	RoR	App. Total	Left	Thru	Right	RoR	App. Total	Left	Thru	Right	RoR	App. Total	Left	Thru	Right	RoR	App. Total	Int. Total
07:00 AM	7	268	5	0	280	24	57	7	6	94	1	150	28	13	192	8	31	10	3	52	618
07:15 AM	6	327	11	1	345	32	66	10	4	112	21	189	23	14	247	6	62	11	4	83	787
07:30 AM	5	384	8	0	397	22	106	8	0	136	33	240	26	9	308	9	85	26	1	121	962
07:45 AM	4	355	7	0	366	32	104	7	2	145	13	203	41	14	271	8	88	15	5	116	898
Total	22	1334	31	1	1388	110	333	32	12	487	68	782	118	50	1018	31	266	62	13	372	3265
08:00 AM	8	291	8	3	310	43	60	8	1	112	15	202	37	17	271	7	50	8	2	67	760
08:15 AM	13	251	10	0	274	30	62	6	4	102	6	202	18	10	236	6	48	11	3	68	680
08:30 AM	13	254	10	3	280	35	55	14	1	105	7	152	34	12	205	3	41	9	1	54	644
08:45 AM	14	252	9	3	278	34	52	13	1	100	12	223	23	17	275	6	56	16	4	82	735
Total	48	1048	37	9	1142	142	229	41	7	419	40	779	112	56	987	22	195	44	10	271	2819
Grand Total	70	2382	68	10	2530	252	562	73	19	906	108	1561	230	106	2005	53	461	106	23	643	6084
Apprch %	2.8	94.2	2.7	0.4		27.8	62	8.1	2.1		5.4	77.9	11.5	5.3		8.2	71.7	16.5	3.6		
Total %	1.2	39.2	1.1	0.2	41.6	4.1	9.2	1.2	0.3	14.9	1.8	25.7	3.8	1.7	33	0.9	7.6	1.7	0.4	10.6	

	Euclid Avenue Southbound					Arrow Highway Westbound					Euclid Avenue Northbound					Arrow Highway Eastbound					
Start Time	Left	Thru	Right	RoR	App. Total		Thru	Right	RoR	App. Total		Thru	Right	RoR	App. Total		Thru	Right	RoR	App. Total	Int. Total
Peak Hour Analysis From 07:15 AM to 08:00 AM - Peak 1 of 1																					
Peak Hour for Entire Intersection Begins at 07:15 AM																					
07:15 AM	6	327	**11**	1	345	32	66	**10**	**4**	112	21	189	23	14	247	6	62	11	4	83	787
07:30 AM	5	**384**	8	0	**397**	22	**106**	8	0	136	**33**	**240**	26	9	**308**	**9**	85	**26**	1	**121**	**962**
07:45 AM	4	355	7	0	366	32	104	7	2	**145**	13	203	**41**	14	271	8	**88**	15	**5**	116	898
08:00 AM	**8**	291	8	**3**	310	**43**	60	8	1	112	15	202	37	**17**	271	7	50	8	2	67	760
Total Volume	23	1357	34	4	1418	129	336	33	7	505	82	834	127	54	1097	30	285	60	12	387	3407
% App. Total	1.6	95.7	2.4	0.3		25.5	66.5	6.5	1.4		7.5	76	11.6	4.9		7.8	73.6	15.5	3.1		
PHF	.719	.883	.773	.333	.893	.750	.792	.825	.438	.871	.621	.869	.774	.794	.890	.833	.810	.577	.600	.800	.885

Counts Unlimited Inc.
25286 Jaclyn Avenue
Moreno Valley, CA 92557
951-485-7934

City of Upland
N/S: Euclid Avenue
E/W: Arrow Highway
Weather: Sunny

File Name : UPLEUARAM
Site Code : 9117035
Start Date : 5/6/2009
Page No : 2

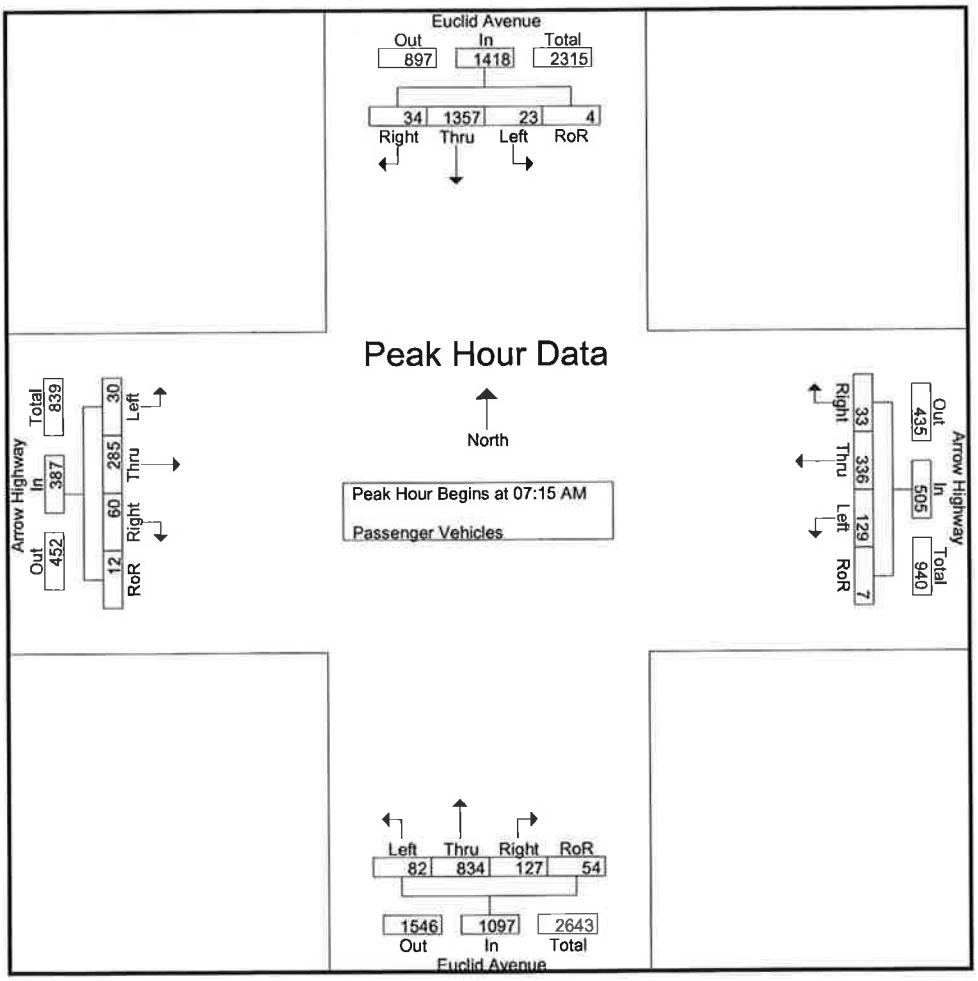

Peak Hour Analysis From 07:15 AM to 08:00 AM - Peak 1 of 1

Peak Hour for Each Approach Begins at:

	07:15 AM					07:15 AM					07:15 AM					07:15 AM				
+0 mins.	6	327	**11**	1	345	32	66	**10**	**4**	112	21	189	23	14	247	6	62	11	4	83
+15 mins.	5	**384**	8	0	**397**	22	**106**	8	0	136	**33**	**240**	26	9	**308**	**9**	85	**26**	1	**121**
+30 mins.	4	355	7	0	366	32	104	7	**2**	**145**	13	203	**41**	14	271	8	**88**	15	**5**	116
+45 mins.	**8**	291	8	**3**	310	**43**	60	8	1	112	15	202	37	**17**	271	7	50	8	2	67
Total Volume	23	1357	34	4	1418	129	336	33	7	505	82	834	127	54	1097	30	285	60	12	387
% App. Total	1.6	95.7	2.4	0.3		25.5	66.5	6.5	1.4		7.5	76	11.6	4.9		7.8	73.6	15.5	3.1	
PHF	.719	.883	.773	.333	.893	.750	.792	.825	.438	.871	.621	.869	.774	.794	.890	.833	.810	.577	.600	.800

Counts Unlimited Inc.
25286 Jaclyn Avenue
Moreno Valley, CA 92557
951-485-7934

City of Upland
N/S: Euclid Avenue
E/W: Arrow Highway
Weather: Sunny

File Name : UPLEUARAM
Site Code : 9117035
Start Date : 5/6/2009
Page No : 1

Groups Printed- Large 2 Axle Vehicles

	Euclid Avenue Southbound					Arrow Highway Westbound					Euclid Avenue Northbound					Arrow Highway Eastbound					
Start Time	Left	Thru	Right	RoR	App. Total	Left	Thru	Right	RoR	App. Total	Left	Thru	Right	RoR	App. Total	Left	Thru	Right	RoR	App. Total	Int. Total
07:00 AM	0	3	0	0	3	0	1	0	0	1	0	7	1	0	8	0	1	0	0	1	13
07:15 AM	0	4	0	0	4	0	2	0	0	2	0	3	1	0	4	0	1	0	0	1	11
07:30 AM	0	5	1	0	6	0	0	1	0	1	0	2	1	0	3	0	2	0	0	2	12
07:45 AM	0	4	1	0	5	1	2	2	0	5	0	5	0	0	5	1	5	0	0	6	21
Total	0	16	2	0	18	1	5	3	0	9	0	17	3	0	20	1	9	0	0	10	57
08:00 AM	0	8	4	0	12	0	0	0	0	0	1	9	0	0	10	1	2	0	0	3	25
08:15 AM	0	2	1	0	3	0	5	0	0	5	0	5	0	0	5	0	2	0	0	2	15
08:30 AM	0	5	0	0	5	0	3	0	0	3	0	3	0	0	3	0	1	0	0	1	12
08:45 AM	0	4	0	0	4	1	4	1	0	6	0	6	1	1	8	1	2	0	0	3	21
Total	0	19	5	0	24	1	12	1	0	14	1	23	1	1	26	2	7	0	0	9	73
Grand Total	0	35	7	0	42	2	17	4	0	23	1	40	4	1	46	3	16	0	0	19	130
Apprch %	0	83.3	16.7	0		8.7	73.9	17.4	0		2.2	87	8.7	2.2		15.8	84.2	0	0		
Total %	0	26.9	5.4	0	32.3	1.5	13.1	3.1	0	17.7	0.8	30.8	3.1	0.8	35.4	2.3	12.3	0	0	14.6	

	Euclid Avenue Southbound					Arrow Highway Westbound					Euclid Avenue Northbound					Arrow Highway Eastbound					
Start Time	Left	Thru	Right	RoR	App. Total		Thru	Right	RoR	App. Total		Thru	Right	RoR	App. Total		Thru	Right	RoR	App. Total	Int. Total
Peak Hour Analysis From 07:15 AM to 08:00 AM - Peak 1 of 1																					
Peak Hour for Entire Intersection Begins at 07:15 AM																					
07:15 AM	0	4	0	0	4	0	2	0	0	2	0	3	1	0	4	0	1	0	0	1	11
07:30 AM	0	5	1	0	6	0	0	1	0	1	0	2	1	0	3	0	2	0	0	2	12
07:45 AM	0	4	1	0	5	1	2	2	0	5	0	5	0	0	5	1	5	0	0	6	21
08:00 AM	0	8	4	0	12	0	0	0	0	0	1	9	0	0	10	1	2	0	0	3	25
Total Volume	0	21	6	0	27	1	4	3	0	8	1	19	2	0	22	2	10	0	0	12	69
% App. Total	0	77.8	22.2	0		12.5	50	37.5	0		4.5	86.4	9.1	0		16.7	83.3	0	0		
PHF	.000	.656	.375	.000	.563	.250	.500	.375	.000	.400	.250	.528	.500	.000	.550	.500	.500	.000	.000	.500	.690

Counts Unlimited Inc.
25286 Jaclyn Avenue
Moreno Valley, CA 92557
951-485-7934

City of Upland
N/S: Euclid Avenue
E/W: Arrow Highway
Weather: Sunny

File Name : UPLEUARAM
Site Code : 9117035
Start Date : 5/6/2009
Page No : 2

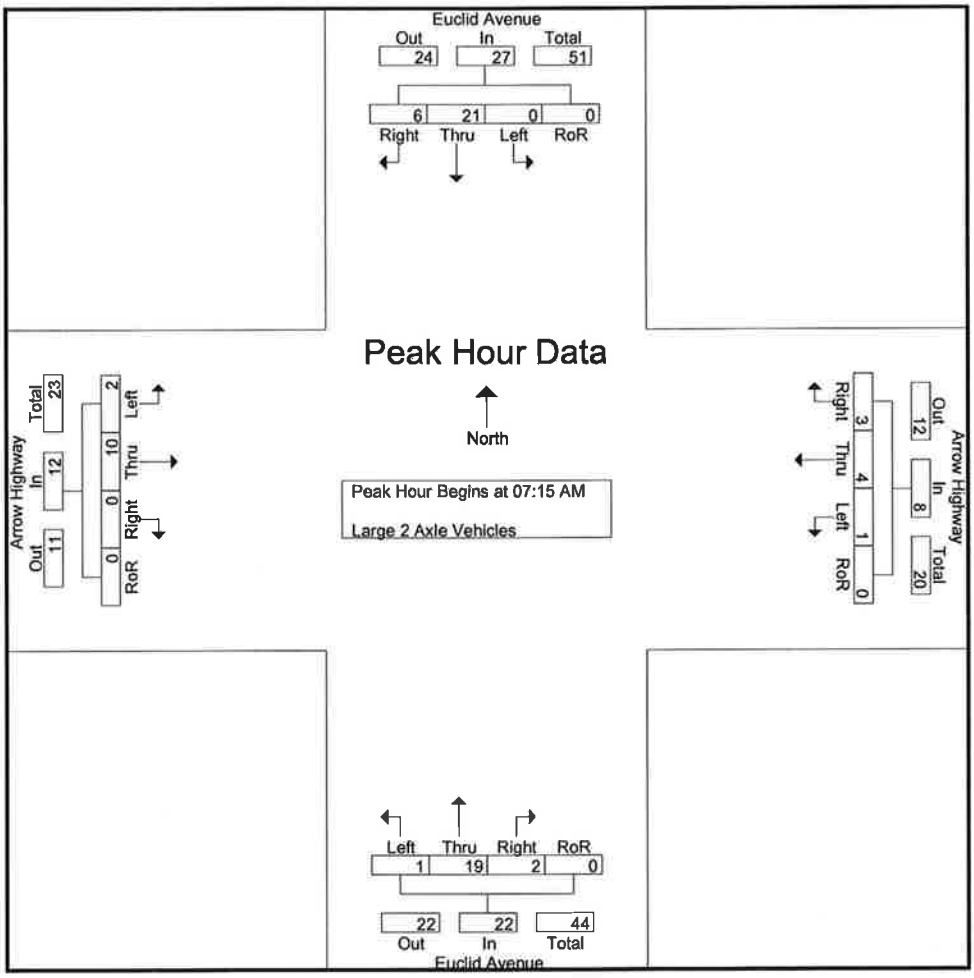

Peak Hour Analysis From 07:15 AM to 08:00 AM - Peak 1 of 1

Peak Hour for Each Approach Begins at:

	07:15 AM					07:15 AM					07:15 AM					07:15 AM				
+0 mins.	0	4	0	0	4	0	**2**	0	0	2	0	3	**1**	0	4	0	1	0	0	1
+15 mins.	0	5	1	0	6	0	0	1	0	1	0	2	1	0	3	0	2	0	0	2
+30 mins.	0	4	1	0	5	**1**	2	**2**	0	**5**	0	5	0	0	5	**1**	**5**	0	0	**6**
+45 mins.	0	**8**	**4**	0	**12**	0	0	0	0	0	**1**	**9**	0	0	**10**	1	2	0	0	3
Total Volume	0	21	6	0	27	1	4	3	0	8	1	19	2	0	22	2	10	0	0	12
% App. Total	0	77.8	22.2	0		12.5	50	37.5	0		4.5	86.4	9.1	0		16.7	83.3	0	0	
PHF	.000	.656	.375	.000	.563	.250	.500	.375	.000	.400	.250	.528	.500	.000	.550	.500	.500	.000	.000	.500

Counts Unlimited Inc.
25286 Jaclyn Avenue
Moreno Valley, CA 92557
951-485-7934

City of Upland
N/S: Euclid Avenue
E/W: Arrow Highway
Weather: Sunny

File Name : UPLEUARAM
Site Code : 9117035
Start Date : 5/6/2009
Page No : 1

Groups Printed- 3 Axle Vehicles

	Euclid Avenue Southbound					Arrow Highway Westbound					Euclid Avenue Northbound					Arrow Highway Eastbound					
Start Time	Left	Thru	Right	RoR	App. Total	Left	Thru	Right	RoR	App. Total	Left	Thru	Right	RoR	App. Total	Left	Thru	Right	RoR	App. Total	Int. Total
07:00 AM	0	0	0	0	0	0	0	0	0	0	1	8	0	0	9	0	1	0	0	1	10
07:15 AM	0	0	0	0	0	0	0	0	0	0	0	8	0	0	8	0	1	0	0	1	9
07:30 AM	0	2	0	0	2	0	0	0	0	0	0	3	0	0	3	0	0	0	0	0	5
07:45 AM	0	1	0	0	1	0	0	0	0	0	0	1	0	0	1	0	0	0	0	0	2
Total	0	3	0	0	3	0	0	0	0	0	1	20	0	0	21	0	2	0	0	2	26
08:00 AM	0	1	0	0	1	0	1	0	0	1	0	3	0	0	3	0	0	0	0	0	5
08:15 AM	0	2	0	0	2	1	0	0	0	1	0	1	0	1	2	0	1	0	0	1	6
08:30 AM	0	2	0	0	2	0	0	0	0	0	0	1	0	0	1	0	0	0	0	0	3
08:45 AM	0	2	0	0	2	0	0	0	0	0	1	1	0	0	2	0	0	0	0	0	4
Total	0	7	0	0	7	1	1	0	0	2	1	6	0	1	8	0	1	0	0	1	18
Grand Total	0	10	0	0	10	1	1	0	0	2	2	26	0	1	29	0	3	0	0	3	44
Apprch %	0	100	0	0		50	50	0	0		6.9	89.7	0	3.4		0	100	0	0		
Total %	0	22.7	0	0	22.7	2.3	2.3	0	0	4.5	4.5	59.1	0	2.3	65.9	0	6.8	0	0	6.8	

	Euclid Avenue Southbound					Arrow Highway Westbound					Euclid Avenue Northbound					Arrow Highway Eastbound					
Start Time	Left	Thru	Right	RoR	App. Total		Thru	Right	RoR	App. Total		Thru	Right	RoR	App. Total		Thru	Right	RoR	App. Total	Int. Total
Peak Hour Analysis From 07:15 AM to 08:00 AM - Peak 1 of 1																					
Peak Hour for Entire Intersection Begins at 07:15 AM																					
07:15 AM	0	0	0	0	0	0	0	0	0	0	0	**8**	0	0	**8**	0	**1**	0	0	**1**	**9**
07:30 AM	0	**2**	0	0	**2**	0	0	0	0	0	0	3	0	0	3	0	0	0	0	0	5
07:45 AM	0	1	0	0	1	0	0	0	0	0	0	1	0	0	1	0	0	0	0	0	2
08:00 AM	0	1	0	0	1	0	**1**	0	0	**1**	0	3	0	0	3	0	0	0	0	0	5
Total Volume	0	4	0	0	4	0	1	0	0	1	0	15	0	0	15	0	1	0	0	1	21
% App. Total	0	100	0	0		0	100	0	0		0	100	0	0		0	100	0	0		
PHF	.000	.500	.000	.000	.500	.000	.250	.000	.000	.250	.000	.469	.000	.000	.469	.000	.250	.000	.000	.250	.583

Counts Unlimited Inc.
25286 Jaclyn Avenue
Moreno Valley, CA 92557
951-485-7934

City of Upland
N/S: Euclid Avenue
E/W: Arrow Highway
Weather: Sunny

File Name : UPLEUARAM
Site Code : 9117035
Start Date : 5/6/2009
Page No : 2

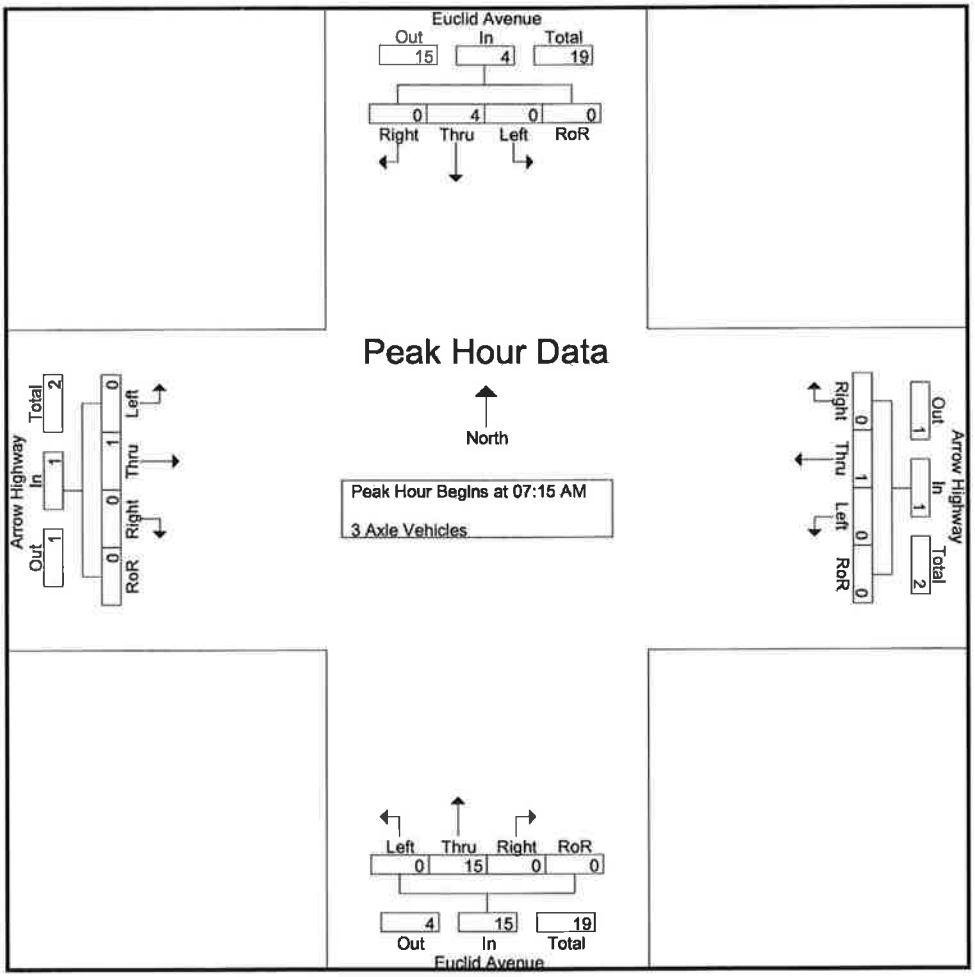

Peak Hour Analysis From 07:15 AM to 08:00 AM - Peak 1 of 1

Peak Hour for Each Approach Begins at:

	07:15 AM					07:15 AM					07:15 AM					07:15 AM				
+0 mins.	0	0	0	0	0	0	0	0	0	0	0	8	0	0	8	0	1	0	0	1
+15 mins.	0	2	0	0	2	0	0	0	0	0	0	3	0	0	3	0	0	0	0	0
+30 mins.	0	1	0	0	1	0	0	0	0	0	0	1	0	0	1	0	0	0	0	0
+45 mins.	0	1	0	0	1	0	1	0	0	1	0	3	0	0	3	0	0	0	0	0
Total Volume	0	4	0	0	4	0	1	0	0	1	0	15	0	0	15	0	1	0	0	1
% App. Total	0	100	0	0		0	100	0	0		0	100	0	0		0	100	0	0	
PHF	.000	.500	.000	.000	.500	.000	.250	.000	.000	.250	.000	.469	.000	.000	.469	.000	.250	.000	.000	.250

Counts Unlimited Inc.
25286 Jaclyn Avenue
Moreno Valley, CA 92557
951-485-7934

City of Upland
N/S: Euclid Avenue
E/W: Arrow Highway
Weather: Sunny

File Name : UPLEUARAM
Site Code : 9117035
Start Date : 5/6/2009
Page No : 1

Groups Printed- 4+ Axle Trucks

	Euclid Avenue Southbound					Arrow Highway Westbound					Euclid Avenue Northbound					Arrow Highway Eastbound					
Start Time	Left	Thru	Right	RoR	App. Total	Left	Thru	Right	RoR	App. Total	Left	Thru	Right	RoR	App. Total	Left	Thru	Right	RoR	App. Total	Int. Total
07:00 AM	0	1	0	0	1	1	0	0	0	1	0	5	0	0	5	0	0	0	0	0	7
07:15 AM	0	0	0	0	0	0	0	0	0	0	0	1	1	0	2	0	0	1	0	1	3
07:30 AM	0	0	0	0	0	0	0	0	0	0	0	0	0	0	0	0	0	0	0	0	0
07:45 AM	0	1	1	0	2	0	0	0	0	0	0	2	0	0	2	0	0	0	0	0	4
Total	0	2	1	0	3	1	0	0	0	1	0	8	1	0	9	0	0	1	0	1	14
08:00 AM	0	0	0	0	0	0	0	0	0	0	0	2	0	0	2	0	0	0	0	0	2
08:15 AM	0	0	0	0	0	0	0	0	0	0	0	0	0	0	0	0	0	0	0	0	0
08:30 AM	0	1	0	0	1	0	1	0	0	1	0	0	0	0	0	0	0	0	0	0	2
08:45 AM	0	1	0	0	1	0	0	0	0	0	0	0	0	0	0	0	0	0	0	0	1
Total	0	2	0	0	2	0	1	0	0	1	0	2	0	0	2	0	0	0	0	0	5
Grand Total	0	4	1	0	5	1	1	0	0	2	0	10	1	0	11	0	0	1	0	1	19
Apprch %	0	80	20	0		50	50	0	0		0	90.9	9.1	0		0	0	100	0		
Total %	0	21.1	5.3	0	26.3	5.3	5.3	0	0	10.5	0	52.6	5.3	0	57.9	0	0	5.3	0	5.3	

	Euclid Avenue Southbound					Arrow Highway Westbound					Euclid Avenue Northbound					Arrow Highway Eastbound					
Start Time	Left	Thru	Right	RoR	App. Total		Thru	Right	RoR	App. Total		Thru	Right	RoR	App. Total		Thru	Right	RoR	App. Total	Int. Total
Peak Hour Analysis From 07:15 AM to 08:00 AM - Peak 1 of 1																					
Peak Hour for Entire Intersection Begins at 07:15 AM																					
07:15 AM	0	0	0	0	0	0	0	0	0	0	0	1	1	0	2	0	0	1	0	1	3
07:30 AM	0	0	0	0	0	0	0	0	0	0	0	0	0	0	0	0	0	0	0	0	0
07:45 AM	0	1	1	0	2	0	0	0	0	0	0	2	0	0	2	0	0	0	0	0	4
08:00 AM	0	0	0	0	0	0	0	0	0	0	0	2	0	0	2	0	0	0	0	0	2
Total Volume	0	1	1	0	2	0	0	0	0	0	0	5	1	0	6	0	0	1	0	1	9
% App. Total	0	50	50	0		0	0	0	0		0	83.3	16.7	0		0	0	100	0		
PHF	.000	.250	.250	.000	.250	.000	.000	.000	.000	.000	.000	.625	.250	.000	.750	.000	.000	.250	.000	.250	.563

Counts Unlimited Inc.
25286 Jaclyn Avenue
Moreno Valley, CA 92557
951-485-7934

City of Upland
N/S: Euclid Avenue
E/W: Arrow Highway
Weather: Sunny

File Name : UPLEUARAM
Site Code : 9117035
Start Date : 5/6/2009
Page No : 2

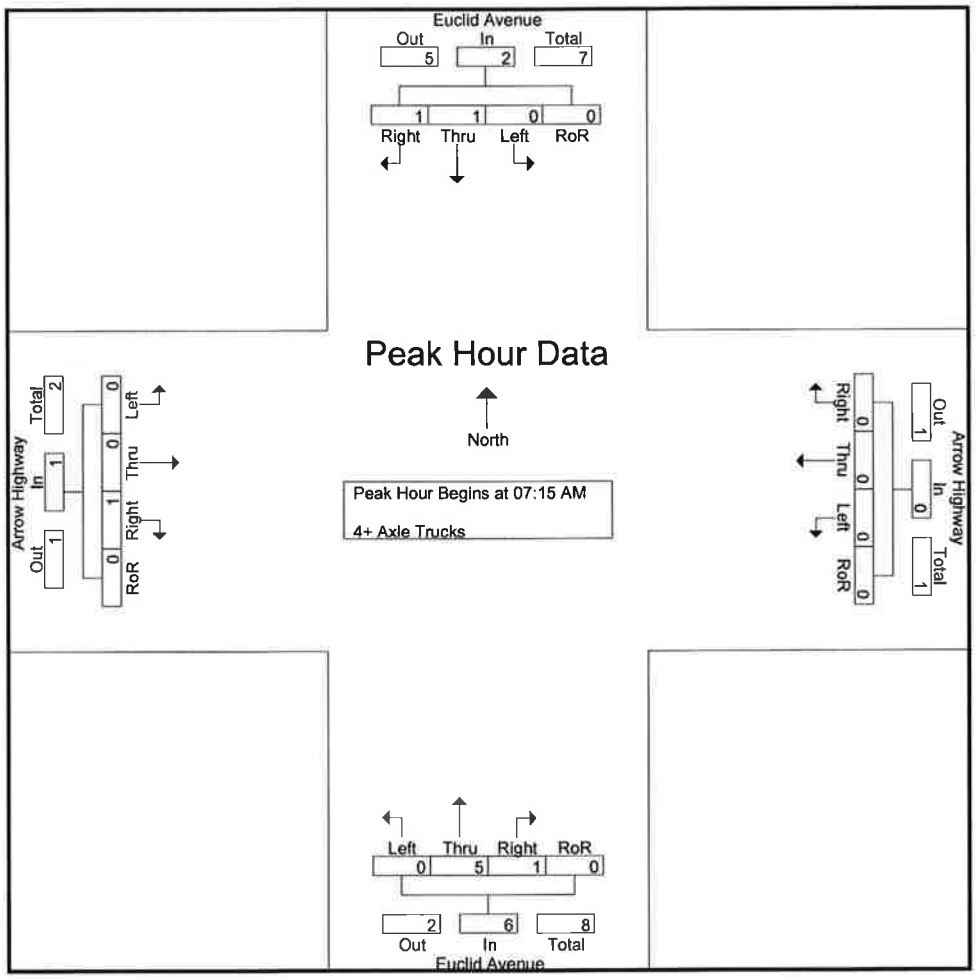

Peak Hour Analysis From 07:15 AM to 08:00 AM - Peak 1 of 1

Peak Hour for Each Approach Begins at:

	07:15 AM					07:15 AM					07:15 AM					07:15 AM				
+0 mins.	0	0	0	0	0	0	0	0	0	0	0	1	1	0	2	0	0	1	0	1
+15 mins.	0	0	0	0	0	0	0	0	0	0	0	0	0	0	0	0	0	0	0	0
+30 mins.	0	1	1	0	2	0	0	0	0	0	0	2	0	0	2	0	0	0	0	0
+45 mins.	0	0	0	0	0	0	0	0	0	0	0	2	0	0	2	0	0	0	0	0
Total Volume	0	1	1	0	2	0	0	0	0	0	0	5	1	0	6	0	0	1	0	1
% App. Total	0	50	50	0		0	0	0	0		0	83.3	16.7	0		0	0	100	0	
PHF	.000	.250	.250	.000	.250	.000	.000	.000	.000	.000	.000	.625	.250	.000	.750	.000	.000	.250	.000	.250

Counts Unlimited Inc.
25286 Jaclyn Avenue
Moreno Valley, CA 92557
951-485-7934

City of Upland
N/S: Euclid Avenue
E/W: Arrow Highway
Weather: Sunny

File Name : UPLEUARPM
Site Code : 9117035
Start Date : 5/6/2009
Page No : 1

Groups Printed- Passenger Vehicles - Large 2 Axle Vehicles - 3 Axle Vehicles - 4+ Axle Trucks

	Euclid Avenue Southbound					Arrow Highway Westbound					Euclid Avenue Northbound					Arrow Highway Eastbound					
Start Time	Left	Thru	Right	RoR	App. Total	Left	Thru	Right	RoR	App. Total	Left	Thru	Right	RoR	App. Total	Left	Thru	Right	RoR	App. Total	Int. Total
04:00 PM	18	271	12	2	303	35	50	12	9	106	21	328	25	11	385	6	73	17	1	97	891
04:15 PM	21	255	4	4	284	39	62	16	2	119	23	334	37	13	407	7	75	14	4	100	910
04:30 PM	18	235	13	2	268	34	92	12	1	139	18	344	37	12	411	13	81	22	4	120	938
04:45 PM	23	245	10	8	286	34	71	16	5	126	17	358	32	14	421	9	72	14	3	98	931
Total	80	1006	39	16	1141	142	275	56	17	490	79	1364	131	50	1624	35	301	67	12	415	3670
05:00 PM	15	290	4	3	312	39	64	21	5	129	18	401	39	6	464	12	90	16	5	123	1028
05:15 PM	16	251	16	3	286	36	71	18	3	128	20	380	32	8	440	8	126	11	5	150	1004
05:30 PM	15	274	13	2	304	41	73	15	3	132	19	383	30	11	443	5	98	19	4	126	1005
05:45 PM	14	273	14	1	302	29	73	13	5	120	15	341	29	10	395	10	67	10	0	87	904
Total	60	1088	47	9	1204	145	281	67	16	509	72	1505	130	35	1742	35	381	56	14	486	3941
Grand Total	140	2094	86	25	2345	287	556	123	33	999	151	2869	261	85	3366	70	682	123	26	901	7611
Apprch %	6	89.3	3.7	1.1		28.7	55.7	12.3	3.3		4.5	85.2	7.8	2.5		7.8	75.7	13.7	2.9		
Total %	1.8	27.5	1.1	0.3	30.8	3.8	7.3	1.6	0.4	13.1	2	37.7	3.4	1.1	44.2	0.9	9	1.6	0.3	11.8	
Passenger Vehicles		2052										2828									
% Passenger Vehicles	98.6	98	100	96	98.1	98.6	97.3	98.4	97	97.8	99.3	98.6	98.1	100	98.6	100	98.8	99.2	92.3	98.8	98.4
Large 2 Axle Vehicles																					
% Large 2 Axle Vehicles	1.4	1.4	0	4	1.4	0.7	2.7	0.8	3	1.9	0.7	1.1	1.1	0	1	0	1	0.8	7.7	1.1	1.3
3 Axle Vehicles	0	9	0	0	9	1	0	1	0	2	0	6	0	0	6	0	1	0	0	1	18
% 3 Axle Vehicles	0	0.4	0	0	0.4	0.3	0	0.8	0	0.2	0	0.2	0	0	0.2	0	0.1	0	0	0.1	0.2
4+ Axle Trucks	0	4	0	0	4	1	0	0	0	1	0	4	2	0	6	0	0	0	0	0	11
% 4+ Axle Trucks																					

	Euclid Avenue Southbound					Arrow Highway Westbound					Euclid Avenue Northbound					Arrow Highway Eastbound					
Start Time	Left	Thru	Right	RoR	App. Total	Left	Thru	Right	RoR	App. Total	Left	Thru	Right	RoR	App. Total	Left	Thru	Right	RoR	App. Total	Int. Total
Peak Hour Analysis From 04:45 PM to 05:30 PM - Peak 1 of 1																					
Peak Hour for Entire Intersection Begins at 04:45 PM																					
04:45 PM	**23**	245	10	**8**	286	34	71	16	**5**	126	17	358	32	**14**	421	9	72	14	3	98	931
05:00 PM	15	**290**	4	3	**312**	39	64	**21**	5	129	18	**401**	**39**	6	**464**	**12**	90	16	**5**	123	**1028**
05:15 PM	16	251	**16**	3	286	36	71	18	3	128	**20**	380	32	8	440	8	**126**	11	5	**150**	1004
05:30 PM	15	274	13	2	304	**41**	**73**	15	3	**132**	19	383	30	11	443	5	98	**19**	4	126	1005
Total Volume	69	1060	43	16	1188	150	279	70	16	515	74	1522	133	39	1768	34	386	60	17	497	3968
% App. Total	5.8	89.2	3.6	1.3		29.1	54.2	13.6	3.1		4.2	86.1	7.5	2.2		6.8	77.7	12.1	3.4		
PHF	.750	.914	.672	.500	.952	.915	.955	.833	.800	.975	.925	.949	.853	.696	.953	.708	.766	.789	.850	.828	.965

Counts Unlimited Inc.
25286 Jaclyn Avenue
Moreno Valley, CA 92557
951-485-7934

City of Upland
N/S: Euclid Avenue
E/W: Arrow Highway
Weather: Sunny

File Name : UPLEUARPM
Site Code : 9117035
Start Date : 5/6/2009
Page No : 2

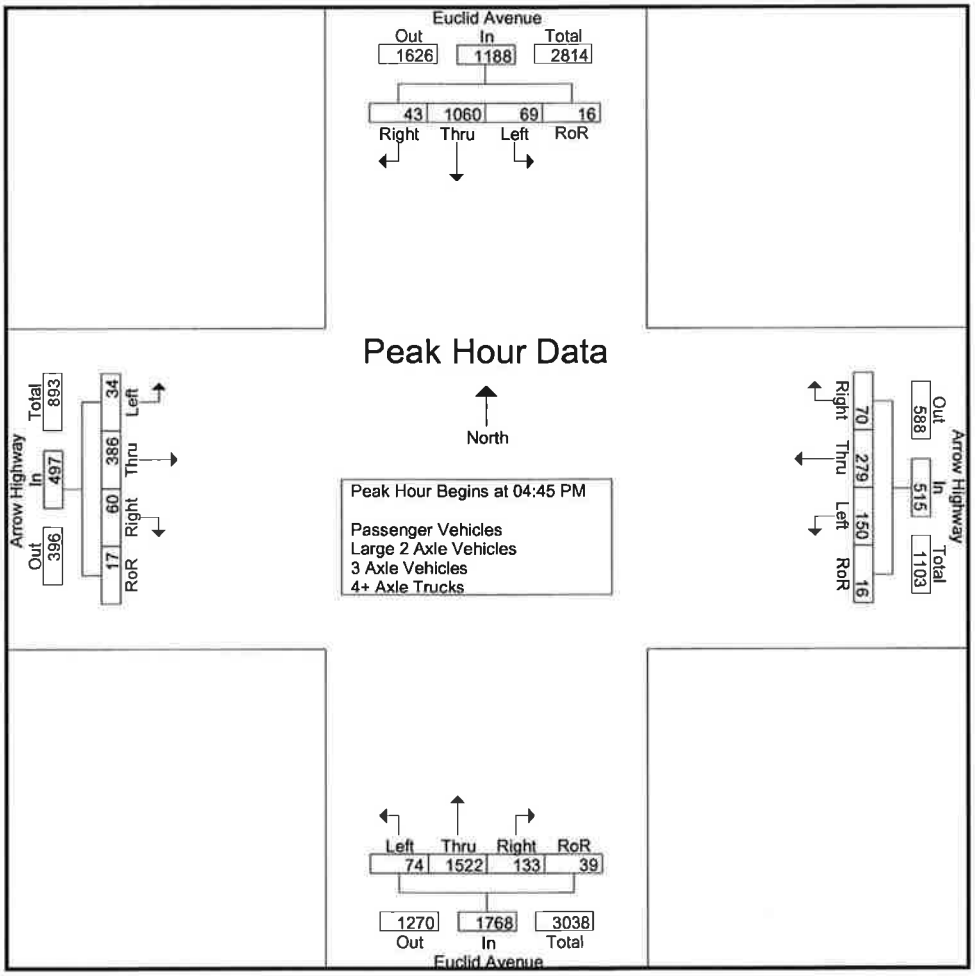

Peak Hour Analysis From 04:45 PM to 05:30 PM - Peak 1 of 1

Peak Hour for Each Approach Begins at:

	04:45 PM					04:45 PM					04:45 PM					04:45 PM				
+0 mins.	**23**	245	10	**8**	286	34	71	16	**5**	126	17	358	32	**14**	421	9	72	14	3	98
+15 mins.	15	**290**	4	3	**312**	39	64	**21**	5	129	18	**401**	**39**	6	**464**	**12**	90	16	**5**	123
+30 mins.	16	251	**16**	3	286	36	71	18	3	128	**20**	380	32	8	440	8	**126**	11	5	**150**
+45 mins.	15	274	13	2	304	**41**	**73**	15	3	**132**	19	383	30	11	443	5	98	**19**	4	126
Total Volume	69	1060	43	16	1188	150	279	70	16	515	74	1522	133	39	1768	34	386	60	17	497
% App. Total	5.8	89.2	3.6	1.3		29.1	54.2	13.6	3.1		4.2	86.1	7.5	2.2		6.8	77.7	12.1	3.4	
PHF	.750	.914	.672	.500	.952	.915	.955	.833	.800	.975	.925	.949	.853	.696	.953	.708	.766	.789	.850	.828

Counts Unlimited Inc.
25286 Jaclyn Avenue
Moreno Valley, CA 92557
951-485-7934

City of Upland
N/S: Euclid Avenue
E/W: Arrow Highway
Weather: Sunny

File Name : UPLEUARPM
Site Code : 9117035
Start Date : 5/6/2009
Page No : 1

Groups Printed- Passenger Vehicles

	Euclid Avenue Southbound					Arrow Highway Westbound					Euclid Avenue Northbound					Arrow Highway Eastbound					
Start Time	Left	Thru	Right	RoR	App. Total	Left	Thru	Right	RoR	App. Total	Left	Thru	Right	RoR	App. Total	Left	Thru	Right	RoR	App. Total	Int. Total
04:00 PM	18	261	12	2	293	35	50	12	9	106	20	324	25	11	380	6	72	17	1	96	875
04:15 PM	20	246	4	4	274	39	60	15	2	116	23	332	37	13	405	7	73	14	4	98	893
04:30 PM	17	229	13	2	261	33	90	11	1	135	18	340	35	12	405	13	79	22	4	118	919
04:45 PM	23	245	10	8	286	32	67	16	5	120	17	353	31	14	415	9	71	14	2	96	917
Total	78	981	39	16	1114	139	267	54	17	477	78	1349	128	50	1605	35	295	67	11	408	3604
05:00 PM	15	286	4	3	308	38	62	21	5	126	18	390	38	6	452	12	90	16	4	122	1008
05:15 PM	16	247	16	3	282	36	69	18	3	126	20	373	32	8	433	8	125	11	5	149	990
05:30 PM	15	269	13	1	298	41	72	15	2	130	19	379	29	11	438	5	98	19	4	126	992
05:45 PM	14	269	14	1	298	29	71	13	5	118	15	337	29	10	391	10	66	9	0	85	892
Total	60	1071	47	8	1186	144	274	67	15	500	72	1479	128	35	1714	35	379	55	13	482	3882
Grand Total	138	2052	86	24	2300	283	541	121	32	977	150	2828	256	85	3319	70	674	122	24	890	7486
Apprch %	6	89.2	3.7	1		29	55.4	12.4	3.3		4.5	85.2	7.7	2.6		7.9	75.7	13.7	2.7		
Total %	1.8	27.4	1.1	0.3	30.7	3.8	7.2	1.6	0.4	13.1	2	37.8	3.4	1.1	44.3	0.9	9	1.6	0.3	11.9	

	Euclid Avenue Southbound					Arrow Highway Westbound					Euclid Avenue Northbound					Arrow Highway Eastbound					
Start Time	Left	Thru	Right	RoR	App. Total		Thru	Right	RoR	App. Total		Thru	Right	RoR	App. Total		Thru	Right	RoR	App. Total	Int. Total
Peak Hour Analysis From 04:45 PM to 05:30 PM - Peak 1 of 1																					
Peak Hour for Entire Intersection Begins at 04:45 PM																					
04:45 PM	**23**	245	10	**8**	286	32	67	16	**5**	120	17	353	31	**14**	415	9	71	14	2	96	917
05:00 PM	15	**286**	4	3	**308**	38	62	**21**	5	126	18	**390**	**38**	6	**452**	**12**	90	16	4	122	**1008**
05:15 PM	16	247	**16**	3	282	36	69	18	3	126	**20**	373	32	8	433	8	**125**	11	**5**	**149**	990
05:30 PM	15	269	13	1	298	**41**	**72**	15	2	**130**	19	379	29	11	438	5	98	**19**	4	126	992
Total Volume	69	1047	43	15	1174	147	270	70	15	502	74	1495	130	39	1738	34	384	60	15	493	3907
% App. Total	5.9	89.2	3.7	1.3		29.3	53.8	13.9	3		4.3	86	7.5	2.2		6.9	77.9	12.2	3		
PHF	.750	.915	.672	.469	.953	.896	.938	.833	.750	.965	.925	.958	.855	.696	.961	.708	.768	.789	.750	.827	.969

Counts Unlimited Inc.
25286 Jaclyn Avenue
Moreno Valley, CA 92557
951-485-7934

City of Upland
N/S: Euclid Avenue
E/W: Arrow Highway
Weather: Sunny

File Name : UPLEUARPM
Site Code : 9117035
Start Date : 5/6/2009
Page No : 2

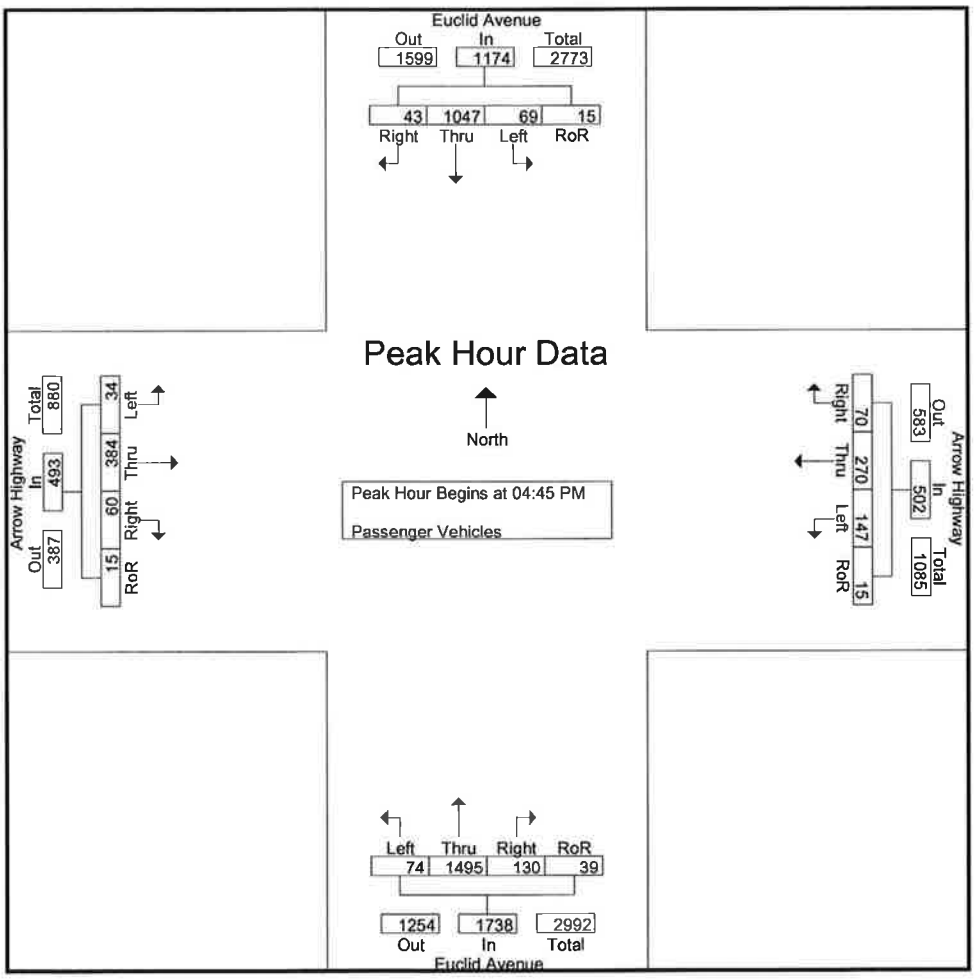

Peak Hour Analysis From 04:45 PM to 05:30 PM - Peak 1 of 1

Peak Hour for Each Approach Begins at:

	04:45 PM					04:45 PM					04:45 PM					04:45 PM				
+0 mins.	**23**	245	10	**8**	286	32	67	16	**5**	120	17	353	31	**14**	415	9	71	14	2	96
+15 mins.	15	**286**	4	3	**308**	38	62	**21**	5	126	18	**390**	**38**	6	**452**	**12**	90	16	4	122
+30 mins.	16	247	**16**	3	282	36	69	18	3	126	**20**	373	32	8	433	8	**125**	11	**5**	**149**
+45 mins.	15	269	13	1	298	**41**	**72**	15	2	**130**	19	379	29	11	438	5	98	**19**	4	126
Total Volume	69	1047	43	15	1174	147	270	70	15	502	74	1495	130	39	1738	34	384	60	15	493
% App. Total	5.9	89.2	3.7	1.3		29.3	53.8	13.9	3		4.3	86	7.5	2.2		6.9	77.9	12.2	3	
PHF	.750	.915	.672	.469	.953	.896	.938	.833	.750	.965	.925	.958	.855	.696	.961	.708	.768	.789	.750	.827

Counts Unlimited Inc.
25286 Jaclyn Avenue
Moreno Valley, CA 92557
951-485-7934

City of Upland
N/S: Euclid Avenue
E/W: Arrow Highway
Weather: Sunny

File Name : UPLEUARPM
Site Code : 9117035
Start Date : 5/6/2009
Page No : 1

Groups Printed- Large 2 Axle Vehicles

	Euclid Avenue Southbound					Arrow Highway Westbound					Euclid Avenue Northbound					Arrow Highway Eastbound					
Start Time	Left	Thru	Right	RoR	App. Total	Left	Thru	Right	RoR	App. Total	Left	Thru	Right	RoR	App. Total	Left	Thru	Right	RoR	App. Total	Int. Total
04:00 PM	0	7	0	0	7	0	0	0	0	0	1	3	0	0	4	0	0	0	0	0	11
04:15 PM	1	7	0	0	8	0	2	0	0	2	0	1	0	0	1	0	2	0	0	2	13
04:30 PM	1	4	0	0	5	1	2	1	0	4	0	3	1	0	4	0	2	0	0	2	15
04:45 PM	0	0	0	0	0	1	4	0	0	5	0	3	1	0	4	0	1	0	1	2	11
Total	2	18	0	0	20	2	8	1	0	11	1	10	2	0	13	0	5	0	1	6	50
05:00 PM	0	3	0	0	3	0	2	0	0	2	0	8	1	0	9	0	0	0	1	1	15
05:15 PM	0	2	0	0	2	0	2	0	0	2	0	5	0	0	5	0	1	0	0	1	10
05:30 PM	0	4	0	1	5	0	1	0	1	2	0	4	0	0	4	0	0	0	0	0	11
05:45 PM	0	2	0	0	2	0	2	0	0	2	0	4	0	0	4	0	1	1	0	2	10
Total	0	11	0	1	12	0	7	0	1	8	0	21	1	0	22	0	2	1	1	4	46
Grand Total	2	29	0	1	32	2	15	1	1	19	1	31	3	0	35	0	7	1	2	10	96
Apprch %	6.2	90.6	0	3.1		10.5	78.9	5.3	5.3		2.9	88.6	8.6	0		0	70	10	20		
Total %	2.1	30.2	0	1	33.3	2.1	15.6	1	1	19.8	1	32.3	3.1	0	36.5	0	7.3	1	2.1	10.4	

	Euclid Avenue Southbound					Arrow Highway Westbound					Euclid Avenue Northbound					Arrow Highway Eastbound					
Start Time	Left	Thru	Right	RoR	App. Total		Thru	Right	RoR	App. Total		Thru	Right	RoR	App. Total		Thru	Right	RoR	App. Total	Int. Total
Peak Hour Analysis From 04:45 PM to 05:30 PM - Peak 1 of 1																					
Peak Hour for Entire Intersection Begins at 04:45 PM																					
04:45 PM	0	0	0	0	0	**1**	**4**	0	0	**5**	0	3	**1**	0	4	0	**1**	0	**1**	**2**	11
05:00 PM	0	3	0	0	3	0	2	0	0	2	0	**8**	1	0	**9**	0	0	0	1	1	**15**
05:15 PM	0	2	0	0	2	0	2	0	0	2	0	5	0	0	5	0	1	0	0	1	10
05:30 PM	0	**4**	0	**1**	**5**	0	1	0	**1**	2	0	4	0	0	4	0	0	0	0	0	11
Total Volume	0	9	0	1	10	1	9	0	1	11	0	20	2	0	22	0	2	0	2	4	47
% App. Total	0	90	0	10		9.1	81.8	0	9.1		0	90.9	9.1	0		0	50	0	50		
PHF	.000	.563	.000	.250	.500	.250	.563	.000	.250	.550	.000	.625	.500	.000	.611	.000	.500	.000	.500	.500	.783

Counts Unlimited Inc.
25286 Jaclyn Avenue
Moreno Valley, CA 92557
951-485-7934

City of Upland
N/S: Euclid Avenue
E/W: Arrow Highway
Weather: Sunny

File Name : UPLEUARPM
Site Code : 9117035
Start Date : 5/6/2009
Page No : 2

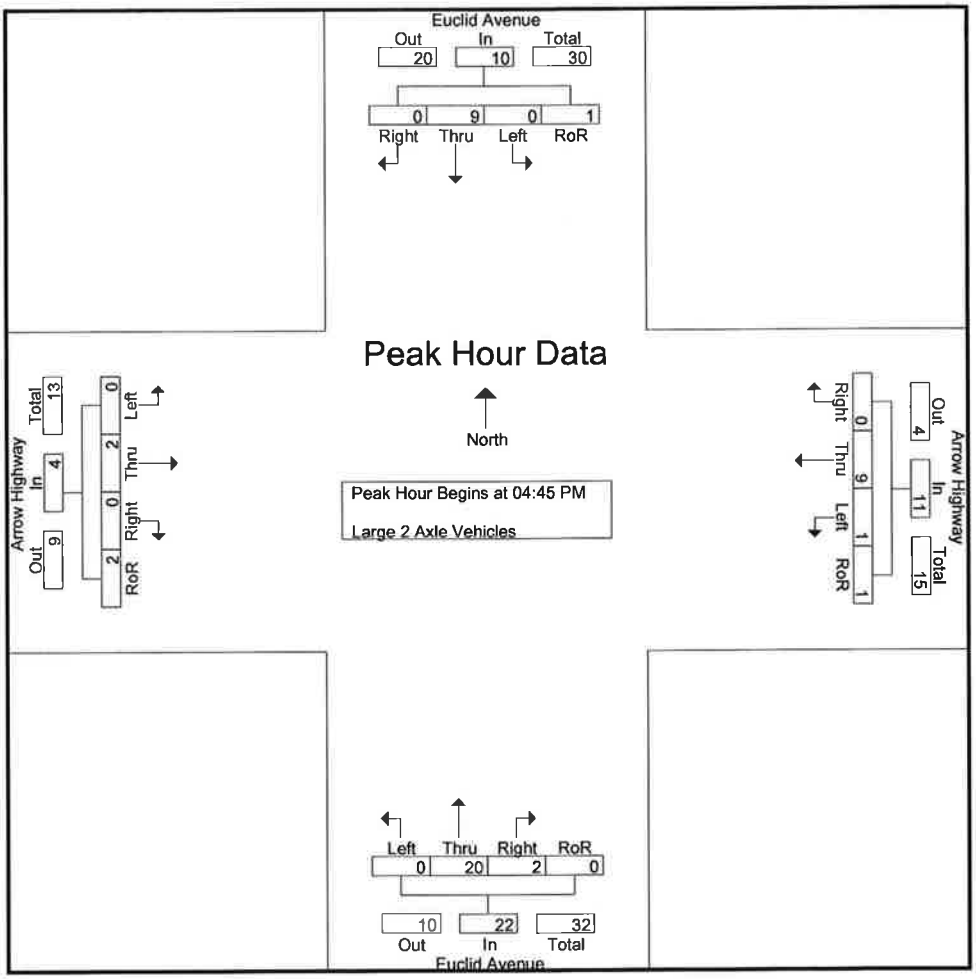

Peak Hour Analysis From 04:45 PM to 05:30 PM - Peak 1 of 1

Peak Hour for Each Approach Begins at:

	04:45 PM					04:45 PM					04:45 PM					04:45 PM				
+0 mins.	0	0	0	0	0	1	4	0	0	5	0	3	1	0	4	0	1	0	1	2
+15 mins.	0	3	0	0	3	0	2	0	0	2	0	8	1	0	9	0	0	0	1	1
+30 mins.	0	2	0	0	2	0	2	0	0	2	0	5	0	0	5	0	1	0	0	1
+45 mins.	0	4	0	1	5	0	1	0	1	2	0	4	0	0	4	0	0	0	0	0
Total Volume	0	9	0	1	10	1	9	0	1	11	0	20	2	0	22	0	2	0	2	4
% App. Total	0	90	0	10		9.1	81.8	0	9.1		0	90.9	9.1	0		0	50	0	50	
PHF	.000	.563	.000	.250	.500	.250	.563	.000	.250	.550	.000	.625	.500	.000	.611	.000	.500	.000	.500	.500

Counts Unlimited Inc.
25286 Jaclyn Avenue
Moreno Valley, CA 92557
951-485-7934

City of Upland
N/S: Euclid Avenue
E/W: Arrow Highway
Weather: Sunny

File Name : UPLEUARPM
Site Code : 9117035
Start Date : 5/6/2009
Page No : 1

Groups Printed- 3 Axle Vehicles

	Euclid Avenue Southbound					Arrow Highway Westbound					Euclid Avenue Northbound					Arrow Highway Eastbound					
Start Time	Left	Thru	Right	RoR	App. Total	Left	Thru	Right	RoR	App. Total	Left	Thru	Right	RoR	App. Total	Left	Thru	Right	RoR	App. Total	Int. Total
04:00 PM	0	2	0	0	2	0	0	0	0	0	0	1	0	0	1	0	1	0	0	1	4
04:15 PM	0	1	0	0	1	0	0	1	0	1	0	1	0	0	1	0	0	0	0	0	3
04:30 PM	0	2	0	0	2	0	0	0	0	0	0	1	0	0	1	0	0	0	0	0	3
04:45 PM	0	0	0	0	0	1	0	0	0	1	0	1	0	0	1	0	0	0	0	0	2
Total	0	5	0	0	5	1	0	1	0	2	0	4	0	0	4	0	1	0	0	1	12
05:00 PM	0	1	0	0	1	0	0	0	0	0	0	2	0	0	2	0	0	0	0	0	3
05:15 PM	0	2	0	0	2	0	0	0	0	0	0	0	0	0	0	0	0	0	0	0	2
05:30 PM	0	0	0	0	0	0	0	0	0	0	0	0	0	0	0	0	0	0	0	0	0
05:45 PM	0	1	0	0	1	0	0	0	0	0	0	0	0	0	0	0	0	0	0	0	1
Total	0	4	0	0	4	0	0	0	0	0	0	2	0	0	2	0	0	0	0	0	6
Grand Total	0	9	0	0	9	1	0	1	0	2	0	6	0	0	6	0	1	0	0	1	18
Apprch %	0	100	0	0		50	0	50	0		0	100	0	0		0	100	0	0		
Total %	0	50	0	0	50	5.6	0	5.6	0	11.1	0	33.3	0	0	33.3	0	5.6	0	0	5.6	

	Euclid Avenue Southbound					Arrow Highway Westbound					Euclid Avenue Northbound					Arrow Highway Eastbound					
Start Time	Left	Thru	Right	RoR	App. Total		Thru	Right	RoR	App. Total		Thru	Right	RoR	App. Total		Thru	Right	RoR	App. Total	Int. Total
Peak Hour Analysis From 04:45 PM to 05:30 PM - Peak 1 of 1																					
Peak Hour for Entire Intersection Begins at 04:45 PM																					
04:45 PM	0	0	0	0	0	**1**	0	0	0	**1**	0	1	0	0	1	0	0	0	0	0	2
05:00 PM	0	1	0	0	1	0	0	0	0	0	0	**2**	0	0	**2**	0	0	0	0	0	**3**
05:15 PM	0	**2**	0	0	**2**	0	0	0	0	0	0	0	0	0	0	0	0	0	0	0	2
05:30 PM	0	0	0	0	0	0	0	0	0	0	0	0	0	0	0	0	0	0	0	0	0
Total Volume	0	3	0	0	3	1	0	0	0	1	0	3	0	0	3	0	0	0	0	0	7
% App. Total	0	100	0	0		100	0	0	0		0	100	0	0		0	0	0	0		
PHF	.000	.375	.000	.000	.375	.250	.000	.000	.000	.250	.000	.375	.000	.000	.375	.000	.000	.000	.000	.000	.583

Counts Unlimited Inc.
25286 Jaclyn Avenue
Moreno Valley, CA 92557
951-485-7934

City of Upland
N/S: Euclid Avenue
E/W: Arrow Highway
Weather: Sunny

File Name : UPLEUARPM
Site Code : 9117035
Start Date : 5/6/2009
Page No : 2

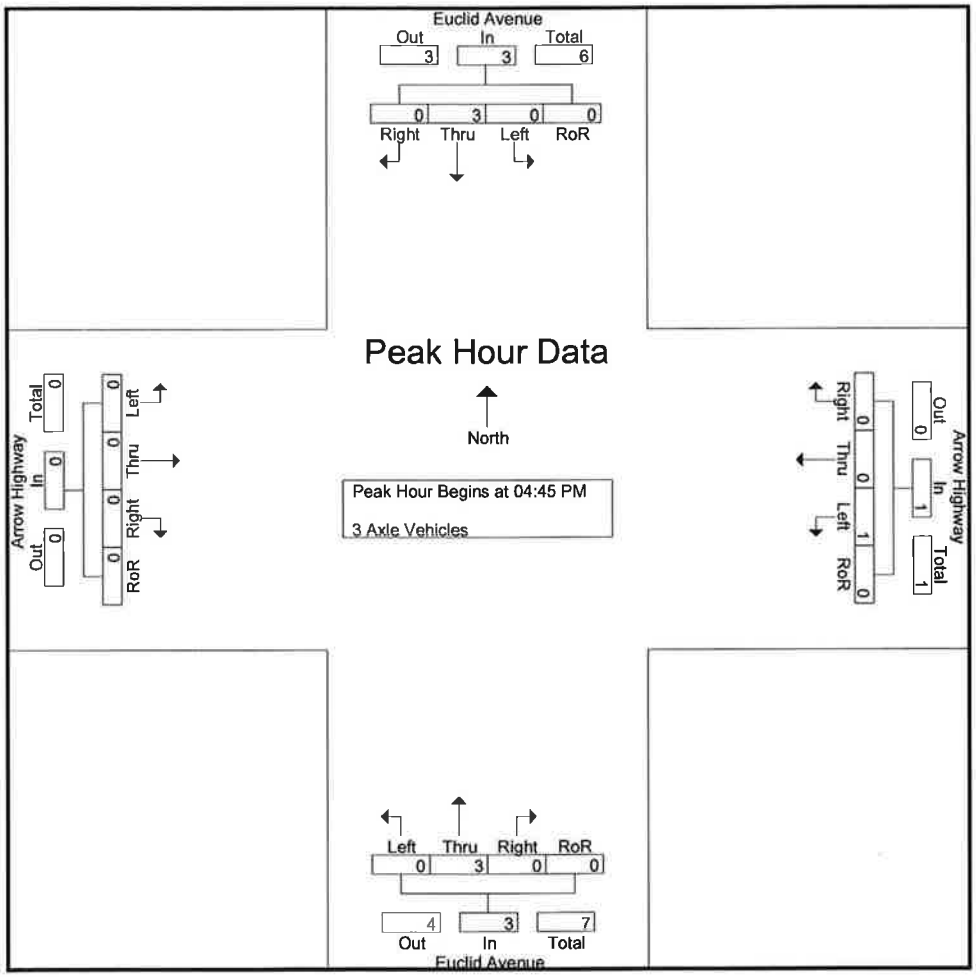

Peak Hour Analysis From 04:45 PM to 05:30 PM - Peak 1 of 1

Peak Hour for Each Approach Begins at:

	04:45 PM					04:45 PM					04:45 PM					04:45 PM				
+0 mins.	0	0	0	0	0	**1**	0	0	0	**1**	0	1	0	0	1	0	0	0	0	0
+15 mins.	0	1	0	0	1	0	0	0	0	0	0	**2**	0	0	**2**	0	0	0	0	0
+30 mins.	0	**2**	0	0	**2**	0	0	0	0	0	0	0	0	0	0	0	0	0	0	0
+45 mins.	0	0	0	0	0	0	0	0	0	0	0	0	0	0	0	0	0	0	0	0
Total Volume	0	3	0	0	3	1	0	0	0	1	0	3	0	0	3	0	0	0	0	0
% App. Total	0	100	0	0		100	0	0	0		0	100	0	0		0	0	0	0	
PHF	.000	.375	.000	.000	.375	.250	.000	.000	.000	.250	.000	.375	.000	.000	.375	.000	.000	.000	.000	.000

Counts Unlimited Inc.
25286 Jaclyn Avenue
Moreno Valley, CA 92557
951-485-7934

City of Upland
N/S: Euclid Avenue
E/W: Arrow Highway
Weather: Sunny

File Name : UPLEUARPM
Site Code : 9117035
Start Date : 5/6/2009
Page No : 1

Groups Printed- 4+ Axle Trucks

	Euclid Avenue Southbound					Arrow Highway Westbound					Euclid Avenue Northbound					Arrow Highway Eastbound					
Start Time	Left	Thru	Right	RoR	App. Total	Left	Thru	Right	RoR	App. Total	Left	Thru	Right	RoR	App. Total	Left	Thru	Right	RoR	App. Total	Int. Total
04:00 PM	0	1	0	0	1	0	0	0	0	0	0	0	0	0	0	0	0	0	0	0	1
04:15 PM	0	1	0	0	1	0	0	0	0	0	0	0	0	0	0	0	0	0	0	0	1
04:30 PM	0	0	0	0	0	0	0	0	0	0	0	0	1	0	1	0	0	0	0	0	1
04:45 PM	0	0	0	0	0	0	0	0	0	0	0	1	0	0	1	0	0	0	0	0	1
Total	0	2	0	0	2	0	0	0	0	0	0	1	1	0	2	0	0	0	0	0	4
05:00 PM	0	0	0	0	0	1	0	0	0	1	0	1	0	0	1	0	0	0	0	0	2
05:15 PM	0	0	0	0	0	0	0	0	0	0	0	2	0	0	2	0	0	0	0	0	2
05:30 PM	0	1	0	0	1	0	0	0	0	0	0	0	1	0	1	0	0	0	0	0	2
05:45 PM	0	1	0	0	1	0	0	0	0	0	0	0	0	0	0	0	0	0	0	0	1
Total	0	2	0	0	2	1	0	0	0	1	0	3	1	0	4	0	0	0	0	0	7
Grand Total	0	4	0	0	4	1	0	0	0	1	0	4	2	0	6	0	0	0	0	0	11
Apprch %	0	100	0	0		100	0	0	0		0	66.7	33.3	0		0	0	0	0		
Total %	0	36.4	0	0	36.4	9.1	0	0	0	9.1	0	36.4	18.2	0	54.5	0	0	0	0	0	

	Euclid Avenue Southbound					Arrow Highway Westbound					Euclid Avenue Northbound					Arrow Highway Eastbound					
Start Time	Left	Thru	Right	RoR	App. Total		Thru	Right	RoR	App. Total		Thru	Right	RoR	App. Total		Thru	Right	RoR	App. Total	Int. Total
Peak Hour Analysis From 04:45 PM to 05:30 PM - Peak 1 of 1																					
Peak Hour for Entire Intersection Begins at 04:45 PM																					
04:45 PM	0	0	0	0	0	0	0	0	0	0	0	1	0	0	1	0	0	0	0	0	1
05:00 PM	0	0	0	0	0	1	0	0	0	1	0	1	0	0	1	0	0	0	0	0	2
05:15 PM	0	0	0	0	0	0	0	0	0	0	0	2	0	0	2	0	0	0	0	0	2
05:30 PM	0	1	0	0	1	0	0	0	0	0	0	0	1	0	1	0	0	0	0	0	2
Total Volume	0	1	0	0	1	1	0	0	0	1	0	4	1	0	5	0	0	0	0	0	7
% App. Total	0	100	0	0		100	0	0	0		0	80	20	0		0	0	0	0		
PHF	.000	.250	.000	.000	.250	.250	.000	.000	.000	.250	.000	.500	.250	.000	.625	.000	.000	.000	.000	.000	.875

Counts Unlimited Inc.
25286 Jaclyn Avenue
Moreno Valley, CA 92557
951-485-7934

City of Upland
N/S: Euclid Avenue
E/W: Arrow Highway
Weather: Sunny

File Name : UPLEUARPM
Site Code : 9117035
Start Date : 5/6/2009
Page No : 2

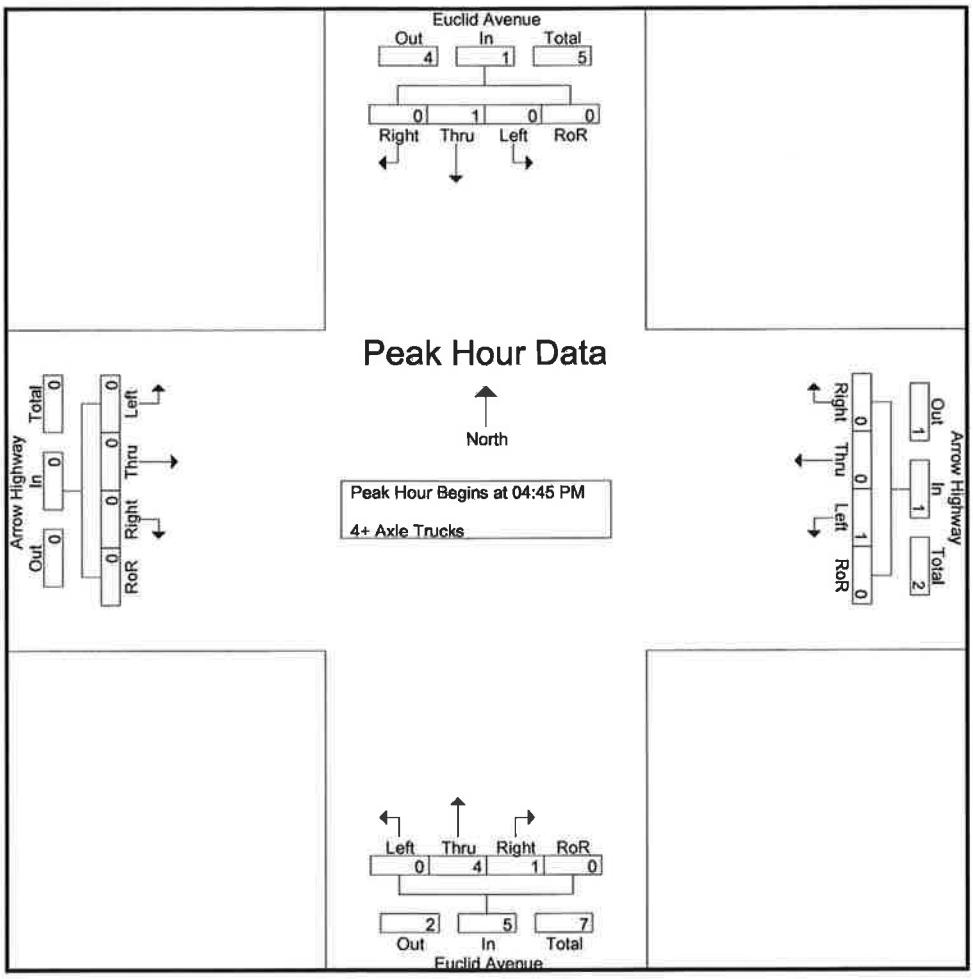

Peak Hour Analysis From 04:45 PM to 05:30 PM - Peak 1 of 1

Peak Hour for Each Approach Begins at:

	04:45 PM					04:45 PM					04:45 PM					04:45 PM				
+0 mins.	0	0	0	0	0	0	0	0	0	0	0	1	0	0	1	0	0	0	0	0
+15 mins.	0	0	0	0	0	1	0	0	0	1	0	1	0	0	1	0	0	0	0	0
+30 mins.	0	0	0	0	0	0	0	0	0	0	0	2	0	0	2	0	0	0	0	0
+45 mins.	0	1	0	0	1	0	0	0	0	0	0	0	1	0	1	0	0	0	0	0
Total Volume	0	1	0	0	1	1	0	0	0	1	0	4	1	0	5	0	0	0	0	0
% App. Total	0	100	0	0		100	0	0	0		0	80	20	0		0	0	0	0	
PHF	.000	.250	.000	.000	.250	.250	.000	.000	.000	.250	.000	.500	.250	.000	.625	.000	.000	.000	.000	.000

5. Euclid Ave / Arrow Hwy

Count Date: 5/6/2009
Peak Hour: AM
PHF: 0.895

Euclid Ave

4+ Axle Trucks	1	1	0	2	5	7
3 Axle Trucks	0	4	0	4	15	19
2 Axle Trucks	6	21	0	27	24	51
Passenger Cars	38	1357	23	1418	904	2322
Total in PCE	50	1400	23	1473	986	2459
				In	Out	Total

Arrow Hwy

4+ Axle Trucks	1	0	0	1	1	2
3 Axle Trucks	0	1	0	1	1	2
2 Axle Trucks	0	10	2	12	11	23
Passenger Cars	72	285	30	387	456	843
Total in PCE	75	302	33	410	478	888
				In	Out	Total

Arrow Hwy

Total in PCE	131	344	45	520	512	1032
Passenger Cars	129	336	40	505	489	994
2 Axle Trucks	1	4	3	8	12	20
3 Axle Trucks	0	1	0	1	1	2
4+ Axle Trucks	0	0	0	0	1	1
				In	Out	Total

Euclid Ave

Total in PCE	187	908	84	1179	1606	2785
Passenger Cars	181	834	82	1097	1558	2655
2 Axle Trucks	2	19	1	22	22	44
3 Axle Trucks	0	15	0	15	4	19
4+ Axle Trucks	1	5	0	6	2	8
				In	Out	Total

PCE Factors

Passenger Cars = 1 PCE

2 Axle Trucks = 1.5 PCE

3 Axle Trucks = 2 PCE

4+ Axle Trucks = 3 PCE

5. Euclid Ave / Arrow Hwy

Count Date: 5/6/2009
Peak Hour: PM
PHF: 0.965

Euclid Ave

4+ Axle Trucks	0	1	0	1	4	5
3 Axle Trucks	0	3	0	3	3	6
2 Axle Trucks	1	9	0	10	21	31
Passenger Cars	58	1047	69	1174	1614	2788
Total in PCE	60	1070	69	1199	1664	2863
				In	Out	Total

Arrow Hwy

4+ Axle Trucks	0	0	0	0	0	0
3 Axle Trucks	0	0	0	0	0	0
2 Axle Trucks	2	2	0	4	10	14
Passenger Cars	75	384	34	493	402	895
Total in PCE	78	387	34	499	418	917
				In	Out	Total

Arrow Hwy

Total in PCE	87	284	154	525	631	1156
Passenger Cars	85	270	147	502	622	1124
2 Axle Trucks	1	9	1	11	4	15
3 Axle Trucks	0	0	1	1	0	1
4+ Axle Trucks	0	0	1	1	1	2
				In	Out	Total

Euclid Ave

Total in PCE	175	1543	74	1792	1302	3094
Passenger Cars	169	1495	74	1738	1269	3007
2 Axle Trucks	2	20	0	22	12	34
3 Axle Trucks	0	3	0	3	4	7
4+ Axle Trucks	1	4	0	5	2	7
				In	Out	Total

PCE Factors

Passenger Cars = 1 PCE

2 Axle Trucks = 1.5 PCE

3 Axle Trucks = 2 PCE

4+ Axle Trucks = 3 PCE

Movement	EBL	EBT	EBR	WBL	WBT	WBR	NBL	NBT	NBR	SBL	SBT	SBR
Lane Configurations												
Volume (vph)	0	335	75	131	428	0	0	0	0	23	1400	50
Ideal Flow (vphpl)	1800	1800	1800	1800	1800	1800	1800	1800	1800	1800	1800	1800
Total Lost time (s)		2.0			2.0						2.0	
Lane Util. Factor		*1.00			*1.00						*1.00	
Frt		1.00			1.00						1.00	
Flt Protected		1.00			1.00						1.00	
Satd. Flow (prot)		3600			3600						5400	
Flt Permitted		1.00			1.00						1.00	
Satd. Flow (perm)		3600			3600						5400	
Peak-hour factor, PHF	0.90	0.90	0.90	0.90	0.90	0.90	0.90	0.90	0.90	0.90	0.90	0.90
Adj. Flow (vph)	0	372	83	146	476	0	0	0	0	26	1556	56
RTOR Reduction (vph)	0	0	0	0	0	0	0	0	0	0	0	0
Lane Group Flow (vph)	0	455	0	0	622	0	0	0	0	0	1638	0
Turn Type				Perm						Perm		
Protected Phases		4			8						6	
Permitted Phases				8						6		
Actuated Green, G (s)		18.3			18.3						28.1	
Effective Green, g (s)		19.3			19.3						29.1	
Actuated g/C Ratio		0.37			0.37						0.56	
Clearance Time (s)		3.0			3.0						3.0	
Vehicle Extension (s)		3.0			3.0						3.0	
Lane Grp Cap (vph)		1326			1326						2999	
v/s Ratio Prot		0.13										
v/s Ratio Perm					0.17						0.30	
v/c Ratio		0.34			0.47						0.55	
Uniform Delay, d1		12.0			12.6						7.4	
Progression Factor		1.00			0.31						1.00	
Incremental Delay, d2		0.2			0.2						0.2	
Delay (s)		12.1			4.2						7.6	
Level of Service		B			A						A	
Approach Delay (s)		12.1			4.2			0.0			7.6	
Approach LOS		B			A			A			A	

Intersection Summary			
HCM Average Control Delay	7.6	HCM Level of Service	A
HCM Volume to Capacity ratio	0.50		
Actuated Cycle Length (s)	52.4	Sum of lost time (s)	4.0
Intersection Capacity Utilization	69.0%	ICU Level of Service	C
Analysis Period (min)	15		
c Critical Lane Group			

Movement	EBL	EBT	EBR	WBL	WBT	WBR	NBL	NBT	NBR	SBL	SBT	SBR
Lane Configurations												
Volume (vph)	0	421	78	154	358	0	0	0	0	69	1070	60
Ideal Flow (vphpl)	1800	1800	1800	1800	1800	1800	1800	1800	1800	1800	1800	1800
Total Lost time (s)		2.0			2.0						2.0	
Lane Util. Factor		*1.00			*1.00						*1.00	
Frt		1.00			1.00						1.00	
Flt Protected		1.00			1.00						1.00	
Satd. Flow (prot)		3600			3600						5400	
Flt Permitted		1.00			1.00						1.00	
Satd. Flow (perm)		3600			3600						5400	
Peak-hour factor, PHF	0.97	0.97	0.97	0.97	0.97	0.97	0.97	0.97	0.97	0.97	0.97	0.97
Adj. Flow (vph)	0	434	80	159	369	0	0	0	0	71	1103	62
RTOR Reduction (vph)	0	0	0	0	0	0	0	0	0	0	0	0
Lane Group Flow (vph)	0	514	0	0	528	0	0	0	0	0	1236	0
Turn Type				Perm						Perm		
Protected Phases		4			8						6	
Permitted Phases				8						6		
Actuated Green, G (s)		16.2			16.2						31.3	
Effective Green, g (s)		17.2			17.2						32.3	
Actuated g/C Ratio		0.32			0.32						0.60	
Clearance Time (s)		3.0			3.0						3.0	
Vehicle Extension (s)		3.0			3.0						3.0	
Lane Grp Cap (vph)		1157			1157						3260	
v/s Ratio Prot		0.14										
v/s Ratio Perm					0.15						0.23	
v/c Ratio		0.44			0.46						0.38	
Uniform Delay, d1		14.4			14.4						5.4	
Progression Factor		1.00			0.26						1.00	
Incremental Delay, d2		0.3			0.3						0.1	
Delay (s)		14.6			4.1						5.5	
Level of Service		B			A						A	
Approach Delay (s)		14.6			4.1			0.0			5.5	
Approach LOS		B			A			A			A	

Intersection Summary			
HCM Average Control Delay	7.2	HCM Level of Service	A
HCM Volume to Capacity ratio	0.40		
Actuated Cycle Length (s)	53.5	Sum of lost time (s)	4.0
Intersection Capacity Utilization	64.8%	ICU Level of Service	C
Analysis Period (min)	15		
c Critical Lane Group			

Movement	EBL	EBT	EBR	WBL	WBT	WBR	NBL	NBT	NBR	SBL	SBT	SBR
Lane Configurations												
Volume (vph)	33	325	0	0	475	45	84	908	187	0	0	0
Ideal Flow (vphpl)	1800	1800	1800	1800	1800	1800	1800	1800	1800	1800	1800	1800
Total Lost time (s)		2.0			2.0			2.0				
Lane Util. Factor		*1.00			*1.00			*1.00				
Frt		1.00			1.00			1.00				
Flt Protected		1.00			1.00			1.00				
Satd. Flow (prot)		3600			3600			5400				
Flt Permitted		1.00			1.00			1.00				
Satd. Flow (perm)		3600			3600			5400				
Peak-hour factor, PHF	0.90	0.90	0.90	0.90	0.90	0.90	0.90	0.90	0.90	0.90	0.90	0.90
Adj. Flow (vph)	37	361	0	0	528	50	93	1009	208	0	0	0
RTOR Reduction (vph)	0	0	0	0	0	0	0	0	0	0	0	0
Lane Group Flow (vph)	0	398	0	0	578	0	0	1310	0	0	0	0
Turn Type	Perm						Perm					
Protected Phases		4			8			2				
Permitted Phases	4						2					
Actuated Green, G (s)		18.3			18.3			28.1				
Effective Green, g (s)		19.3			19.3			29.1				
Actuated g/C Ratio		0.37			0.37			0.56				
Clearance Time (s)		3.0			3.0			3.0				
Vehicle Extension (s)		3.0			3.0			3.0				
Lane Grp Cap (vph)		1326			1326			2999				
v/s Ratio Prot					c0.16							
v/s Ratio Perm		0.11						0.24				
v/c Ratio		0.30			0.44			0.44				
Uniform Delay, d1		11.8			12.5			6.8				
Progression Factor		0.16			1.00			1.00				
Incremental Delay, d2		0.1			0.2			0.1				
Delay (s)		2.0			12.7			6.9				
Level of Service		A			B			A				
Approach Delay (s)		2.0			12.7			6.9			0.0	
Approach LOS		A			B			A			A	

Intersection Summary			
HCM Average Control Delay	7.5	HCM Level of Service	A
HCM Volume to Capacity ratio	0.43		
Actuated Cycle Length (s)	52.4	Sum of lost time (s)	4.0
Intersection Capacity Utilization	60.6%	ICU Level of Service	B
Analysis Period (min)	15		
c Critical Lane Group			

Movement	EBL	EBT	EBR	WBL	WBT	WBR	NBL	NBT	NBR	SBL	SBT	SBR
Lane Configurations												
Volume (vph)	34	456	0	0	438	87	74	1543	175	0	0	0
Ideal Flow (vphpl)	1800	1800	1800	1800	1800	1800	1800	1800	1800	1800	1800	1800
Total Lost time (s)		2.0			2.0			2.0				
Lane Util. Factor		*1.00			*1.00			*1.00				
Frt		1.00			1.00			1.00				
Flt Protected		1.00			1.00			1.00				
Satd. Flow (prot)		3600			3600			5400				
Flt Permitted		1.00			1.00			1.00				
Satd. Flow (perm)		3600			3600			5400				
Peak-hour factor, PHF	0.97	0.97	0.97	0.97	0.97	0.97	0.97	0.97	0.97	0.97	0.97	0.97
Adj. Flow (vph)	35	470	0	0	452	90	76	1591	180	0	0	0
RTOR Reduction (vph)	0	0	0	0	0	0	0	0	0	0	0	0
Lane Group Flow (vph)	0	505	0	0	542	0	0	1847	0	0	0	0
Turn Type	Perm						Perm					
Protected Phases		4			8			2				
Permitted Phases	4						2					
Actuated Green, G (s)		16.2			16.2			31.3				
Effective Green, g (s)		17.2			17.2			32.3				
Actuated g/C Ratio		0.32			0.32			0.60				
Clearance Time (s)		3.0			3.0			3.0				
Vehicle Extension (s)		3.0			3.0			3.0				
Lane Grp Cap (vph)		1157			1157			3260				
v/s Ratio Prot					c0.15							
v/s Ratio Perm		0.14						0.34				
v/c Ratio		0.44			0.47			0.57				
Uniform Delay, d1		14.3			14.5			6.4				
Progression Factor		0.27			1.00			1.00				
Incremental Delay, d2		0.3			0.3			0.2				
Delay (s)		4.1			14.8			6.6				
Level of Service		A			B			A				
Approach Delay (s)		4.1			14.8			6.6			0.0	
Approach LOS		A			B			A			A	

Intersection Summary			
HCM Average Control Delay	7.7	HCM Level of Service	A
HCM Volume to Capacity ratio	0.52		
Actuated Cycle Length (s)	53.5	Sum of lost time (s)	4.0
Intersection Capacity Utilization	77.2%	ICU Level of Service	D
Analysis Period (min)	15		
c Critical Lane Group			